OPERATORS MANUAL

KYODO KG510 BASE/REPEATER

CONTENTS

CONTENTS

1.0 INTRODUCTION

Thank you for purchasing a KYODO KG510 Base or Repeater.
We trust that it will operate reliably and give you years of service. If not, or if you wish to suggest ways of improving the KG510's operation, or features, we would welcome your comments.

2.0 FEATURES & PRODUCT DESCRIPTION

2.1 Features

- Simplex or two frequency Duplex operation
- EEPROM programmable with a PC computer
- Single Channel and 99 Channel Versions available
- Full Dot Matrix Liquid Crystal Display
- All FM Frequency Bands from 30 to 520 MHz
- Front Facing Speaker
- Transmit Time Limiter to prevent channel jamming
- TX and RX Encryption
- Two Channel Scanning Modes
- 5 Tone Encoder & Decoder plus DTMF Encoder & Decoder
- 22, 26, or 35 MHz switching bandwidth (model dependant)
- Up to 99 channels with Channel Labels
- Two-Stage Front End allows mixed Simplex and Duplex operation
- Channel selectable Wide or Narrow channel spacing
- CTCSS/DCS on a per channel basis
- 5 X 4 Keypad for Channel Change etc
- 2RU Equipment Cabinet
- Step-Up VCO Voltage for Superior Selectivity
- Low Stand-by Current is ideal for Solar Installations
- Watch Dog Timer

2.2 Product Description

The **Kyodo KG510** transceivers represent a quantum advance on the previous rugged & time proven KG110 transceiver. They comprise of separate modules all housed within one 2RU equipment cabinet. The receiver, the transmitter, and the PA Unit are each enclosed within their own diecast housing, that are then directly mounted on the large upper heat-sink. A µProcessor controlled interface module controls the channel selection, LCD Display, timers, interfaces, and signalling features.
Models are available for all FM commercial and military frequency bands from 30 MHz to 520 MHz, with channel selectable 12.5, 20, 25, or 30KHz channel spacing arrangements.
The RF Power Output is 1 - 50 Watts on a continuous duty basis. The CTCSS module supports all EIA tones. All tones and different encode and decode tones can be set on a per channel basis during radio programming.

The KG510 includes 5 tone Selective Calling encoder/decoder with non-predictive decoder, as well as a DTMF encoder, and voice encryption. It supports normal all channel scanning and programmed channel scanning for base use.

The **KG510** is fitted with a large full dot matrix LCD that is used to display the Channel Numbers & Names, frequency & tone programmed information, and signalling information. All user interface keys and knobs are conveniently located on the front of the radio. All user entered functions are easily activated in a logical manner via the keypad.

The **KG510** is supplied with an "N" Type connector for the transmitter, and a TNC Connector for the Receiver to allow easy connection to the diplexer or feeder cables.
The rear panel includes a 9 way D sub connector for fitment of an external shared tone panel. Also included is a 25 way D sub connector that enables external interface to other radios or control equipment.

2.3 Standard Inclusions

The KG510 transceiver is supplied complete with the following items:

- KG510 transceiver
- DC Cable
- Operators Manual
- KD561 Hand Microphone

3.0 CONTROLS, INDICATORS, & CONNECTORS

3.1 Front Panel Controls

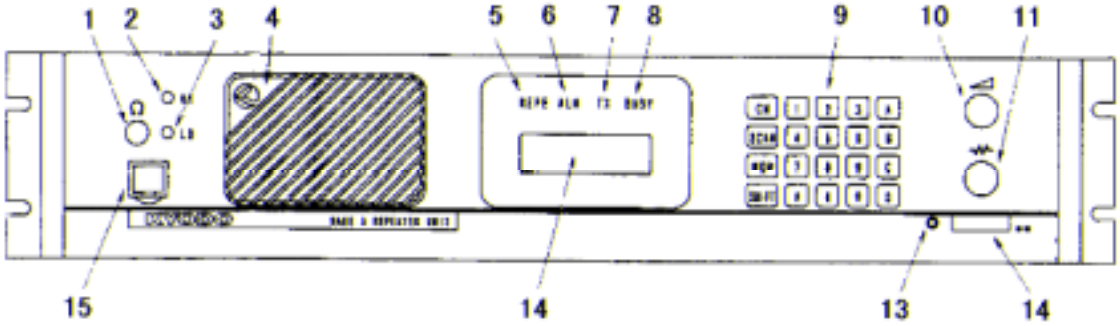

1. Headphone Socket
   This socket is provided to allow users to listen to the KG510 using headphones. Plugging a headphone into this socket will disconnect the built-In speaker. It does NOT include a microphone input, or TX PTT facility.

2. High TX Power
   This is a service point and is not used by the radio operators

3. Low TX Power
   This is a service point and is not used by the radio operators

4. Loud Speaker*
   The receiver audio signals are heard from this speaker (provided that the volume setting is loud enough and provided that the speaker has not been muted by one of the tone signalling formats.

5. Repeater Mode Indicator LED
   The Repeater Mode Indicator LED will illuminate "REP" in **Yellow** when the selected channel has been programmed for Repeater operation. This LED is NOT illuminated on any channel that is programmed to operate in Base mode.

6. Alarm Mode Indicator LED
   The Alarm Mode Indicator LED will illuminate (Fast flashing) "ALM" in **Orange** whenever the transceiver detects a fault in the receiver module, the transmitter module, or the PA module on the selected channel.
   If supply voltage is going down to 10.8V or less(LOW Battery), “ALM” LED will illuminate(Slow flashing).

7. Transmit Mode Indicator LED
The Transmit Mode Indicator LED will illuminate "TX" in **Red** whenever the KG510 is transmitting.

8. Busy Mode Indicator LED
The Busy Mode Indicator LED will illuminate "RX" in **Green** whenever the KG510 receives a carrier signal on the selected channel that is greater then the Squelch setting.

9. Keypad*
The 5x4 key Keypad is used to enter channel selection, tone information, and other data into the KG510. Specific key sequences are described fully in section 4 of this document. It includes the following keys: CH, SCAN, MON, SHIFT, 1, 2, 3, 4, 5, 6, 7, 8, 9, 0, ＊, #, A, B, C, and D.

10. Volume Control*
The Volume Control is used to set the audio output level from the loudspeaker. Rotate this knob clockwise to increase the audio level, or counter-clockwise to reduce the audio level.

11. Squelch Control*
The Squelch Control is used to set the squelch threshold. Select a channel that is not being used and slowly rotate this knob clockwise until the annoying background noise ceases. It may be desirable to rotate this knob clockwise slightly past the squelch threshold to compensate for varying background noise levels.

12. Power ON/OFF Switch
The Power ON/OFF Switch is used to switch the KG510 "ON" or "OFF". Press this knob to switch the KG510 "ON". Press this knob again to switch the KG510 "OFF". This knob is slightly more depressed when in the "ON" position.

13. Power On Indicator LED
The Power ON Indicator LED will illuminate in Green colour whenever the Power ON/OFF switch is switched to the "ON" position.

14. Liquid Crystal Display (LCD)*
The LCD comprises of four (4) lines each of which is capable of displaying twenty-one (21) characters.

The first line, in normal operating condition, displays the strength of the signal being received on the selected channel as a bar graph.

The second line displays the strength of the transmitting power as a bar graph.
The third line displays the selected channel number (up to four characters) in the first five left hand character spaces, and displays the channel name (up to eight characters) in the next eight character spaces.

The following characters may be used in the channel name:

0-9, A-Z, a-z, / + - ＊ # ! $ % ( ) = [ ] < > ? and space

This area of the LCD is left blank when channel names are not used.

The six character spaces on the right hand side of this line are used to display status symbols as follows:

a. The monitor status. --- symbol is ⚄

b. The key lock status. --- symbol is ⚿

c. The tone encode status. --- symbol is ♪

d. The scan mode status. --- symbol is ∞

e. The high power transmit status. --- symbol is ▶

f. The [SHIFT] key status. ---This symbol ⛊ is displayed whenever the [SHIFT] key is held depressed.

The fourth line displays (in the left hand four character spaces) the type of tone signalling system selected by the user. e.g. "5TON" means 5 Tone signalling while DTMF means Dual Tone Multi Frequency signalling.
The right hand sixteen character spaces are used to display data that the user enters (e.g. 5 Tone calling sequences). These character spaces are also used by the KG510 to display messages and information directed to the user.

15. Microphone Input Socket
Connect the supplied Kyodo KD561 microphone into this socket.

* Not used on the Single Channel Model

3.2 Rear Panel Connectors

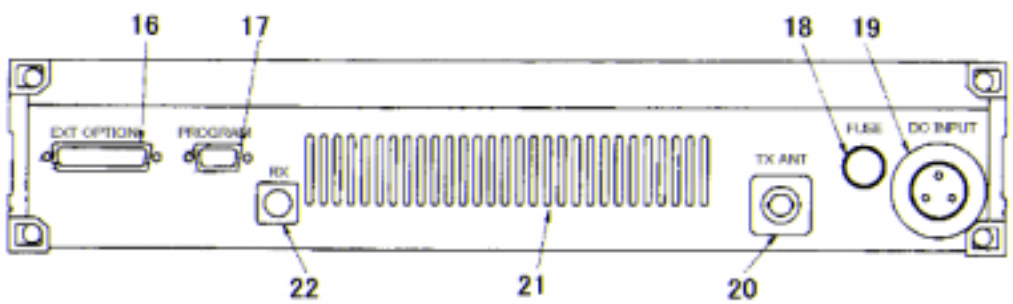

16. 25 way External Options Connector
17. 9 way Programming Connector
18. DC Input Fuse Holder
19. 3 way DC Input Socket
20. TX/Antenna Connector (N type)
21. Ventilation Slots
22. RX Connector (BNC type)

4.0 OPERATION

4.1 Installation and Programming

As the KG510 can be installed to operate as either a Base Station or as a Repeater, some of the instructions in this document may apply to one application only, some may apply in both cases, while others may only apply if the particular function has been enabled during programming of the KG510.

The KG510 must be programmed before it will operate correctly. This is best done by the equipment supplier or a competent radio tradesman. They will require the Kyodo 51BS programming software to do this correctly.

It is important that the KG510 be correctly installed at its working location. It is recommended that this be done by a competent radio tradesman.
As a minimum, it is necessary to:

- Connect the DC Input power lead to a suitable 13.8 Volt Regulated DC Power supply that has sufficient capacity. (Ensure that the DC Polarity is correct).
- Connect the two antenna connectors to suitable antennas. (Ensure that the VSWR of the antennas is correct).
- Insert the Kyodo KD561 Microphone into the microphone connector on the front panel.

4.2 Basic Operation

4.2.1 Switch On
Switch the KG510 "ON" by pressing the knob (12) and then check that the LED indicator (13) is illuminated.

4.2.2 Adjust the Volume Setting
Rotate the Volume Knob (10) clockwise (from the fully counterclockwise position) until the audio level from the speaker is suitable.

4.2.3 Adjust the Squelch Setting
Rotate the Squelch Knob clockwise (from the fully counter clockwise position) slowly until the background noise can no longer be heard. It is wise to slightly rotate the knob further in the clockwise direction (so that variations in the background noise level do not "break" the squelch setting and cause annoying squelch noises to be heard from the speaker).

4.2.4 Select the Channel
Select the required channel by pressing the [SHIFT] key followed by the channel number keys within two seconds. E.g. [SHIFT] + [0] + [1] to select channel #1. The LCD Display should now display CH01 and (if programmed with a channel label) the channel name: "CH01 Kyodo-co".

4.2.5 Receiving
You should now be able to hear any radio traffic that occurs on channel #1 on the KG510. It may be necessary to further slightly adjust the Volume setting to suit your listening requirements.

4.2.6 Transmitting
Depending on the legal requirements in your country, and the operating requirements within your organisation, it may be necessary to announce your Call Sign, and will probably be necessary to announce the Call Sign of the party you are calling at the start of your transmission.
When transmitting, it is necessary to hold the microphone about 75mm (3") from your mouth and speak clearly into the grill of the microphone.
It is also necessary to press and hold the Press To Talk (PTT) bar on the side of the microphone depressed while speaking into the microphone.

4.3 Front Panel Operation

This section describes most signalling and other advanced features that are available on the KG510 Transceiver. The availability of some features is dependent on the programming of the transceiver. You may find it worthwhile to discuss these features in detail with your radio supplier to obtain a full understanding of their benefits.

4.3.1 Keypad Operation

The Keypad is the interface between the user and the KG510 and is used to enable or disable various functions, and to enter the required data for signalling purposes.
(5-Tone) or (DTMF) shown after the described feature indicates that the described feature applies to the particular signalling format.

The following keys are used for these purposes:

[0] - [9] Entering new channel numbers
Entering the "KILL" password
Entering signalling encoding numbers (5-Tone) (DTMF)
Entering DTMF numbers (DTMF)

[A] Advancing the KG510 to the next higher channel
Entering the signalling "A" tone (5-Tone) (DTMF)
Encodes the "A" Tone (DTMF)

[B] Advancing the KG510 to the next lower channel
Entering the signalling "B" tone (5-Tone) (DTMF)
Encodes the "B" Tone (DTMF)

[C] Entering the signalling "C" tone (5-Tone) (DTMF)
Encodes the "C" Tone (DTMF)

[D] Entering the signalling "D" tone (5-Tone) (DTMF)
Encodes the "D" Tone (DTMF)

[＊] Displays the previously entered encode numbers (5-Tone) (DTMF)
Encodes the "＊" -Tone (DTMF)

[#] Encodes the signalling numbers that are displayed in the LCD display (5-Tone) (DTMF)
Encodes the "#"-Tone (DTMF)

[CH] Used with two channel numbers [0] - [9] to change the active channel on the KG510. E.g. [CH]+[9]+[0] will change the active channel to Channel 90 (provided Ch 90 has been programmed into the KG510.

[SCN] Used to place the KG510 into the "All-Scan" mode where the KG510 will scan all programmed channels. Pressing the [SCN] key again will cause the KG510 to exit from the "All-Scan" mode.

[MON] Switches the KG510 between "Monitor ON" mode and "Monitor OFF" mode and is used to "Un-mute" the radio when using selective calling (depending on the programming of the KG510 transceiver).

4.3.2 Keypad Operation using the [SHIFT] Key

Some of the KG510's features and how it operates can be changed by using the [SHIFT] key. To make these changes, it is necessary to firstly press the [SHIFT] key followed by the other keys within a two second timeframe.

The following key sequences are used for these purposes:

[SHIFT]+[0]	Toggles the tone system between 5-Tone signalling and DTMF signalling.
[SHIFT]+[1]	Switches the LCD back-light ON or OFF.
[SHIFT]+[2]	Toggles the transmitting power between High power and Low power.
[SHIFT]+[3]	Invalid Key.
[SHIFT]+[4]	Toggles between "Single Tone Encoding" mode and "5-Tone" or "DTMF" signalling mode.
[SHIFT]+[5]	Invalid Key
[SHIFT]+[6]	Enters the KILL mode to allow entry of the KILL password.
[SHIFT]+[7]	Displays the programmed information for the selected (active) channel in the LCD display.
[SHIFT]+[8]	Locks or Unlocks the KG510's Keypad.
[SHIFT]+[9]	Toggles the KG510 between "Normal Channel Scanning" mode and "Priority Channel Scanning" mode.
[SHIFT]+[A]	Restores a channel to the Channel Scanning List. (The user must firstly select the channel to be restored as the active channel).
[SHIFT]+[B]	Invalid Key
[SHIFT]+[C]	Indicates to the KG510 that you have entered the last number of a DTMF encoding sequence.
[SHIFT]+[D]	Invalid Key
[SHIFT]+[＊]	Deletes the active channel from the Channel Scanning List.
[SHIFT]+[#]	Will attach the "R-Number" data to the active encode number and transmit the whole sequence.
[SHIFT]+[CH]	Will start or stop the display of the TX and RX bar graphs in the LCD display.
[SHIFT]+[SCN]	Will place the KG510 in the Program Scan mode or exit from the Program Scan mode.
[SHIFT]+[MON]	Invalid Key.

4.3.3 Changing Channels

To change to another channel, simply press the [CH] key followed by the number of the required channel within two seconds.

e.g. To select Channel # 8, press [CH] [0] [8]
To select Channel # 99, press [CH] [9] [9]

Note that it is always necessary to enter two digits for the Channel Number.
The channel # location displayed in the LCD will become blank as soon as the [CH] key is pressed, and the cursor will blink at the location of the channel number, and display the new numbers as they are entered.

It is also possible to change channels by using the [A] and [B] keys instead of entering the channel numbers.
Pressing the [A] key will advance the channel to the next higher programmed channel, while pressing [B] will advance the channel to the next lower programmed channel.
Note that this action will ignore channels that have **not** been programmed into the KG510. Accordingly, the LCD display may appear to advance more than one channel if the missed channel is not programmed into the KG510.

4.4 Signalling

The KG510 includes some very sophisticated signalling capabilities. We suggest that you have your radio supplier conduct some training on the use of these capabilities prior to using them.
While it is possible to use these signalling capabilities in both repeater mode, and in base station mode, many will only be useful in practice when the KG510 is used in base station configuration.
The KG510 supports the 5-Tone sequential, and/or the DTMF, and the Single Tone signalling formats. The required signalling format(s) must be enabled when the KG510 is programmed.

4.4.1 5-Tone Signalling

4.4.1.1 Available Tones

5-Tone signalling is commonly referred to as Selective Calling (or Selcall) and usually comprises of a series of 5 tones sequentially transmitted or received in accordance with certain international standards. It is possible to use longer sequences to enhance the signalling capabilities and to provide further functions.

Accordingly, the KG510 will encode up to sixteen (16) tones and decode up to eight (8) tones.
These tones can be any of the following:
[0] - [9], and [A] - [D]

The most recently entered tone can be recalled and deleted by pressing the [＊] key repeatedly.

4.4.1.2 Entering a 5-Tone Encode Sequence

When switched "ON", the KG510 carries out its self-test routine, and then waits ready to accept 5-Tone encode numbers. Accordingly, it is only necessary to enter the required 5-Tone digits directly using the keypad, and then pressing the [#] key to transmit the 5-Tone sequence. (Up to sixteen digits can be entered).
If it is necessary to enter the "R" number sequence to activate the repeater, the [SHIFT] key must be pressed before pressing the [#] key.
If a 5-Tone number is NOT displayed in the LCD, and the [#] key is pressed, then the KG510 will recall the most recent 5-Tone number and transmit it.

4.4.1.3 Recalling the last encode sequence

Pressing the [∗] will recall the most recent 5-Tone encode sequence and display the sequence in the LCD display. Further presses of the [∗] key will delete the last digit of the sequence until all digits are deleted. In practice users will usually delete the last one or two digits before entering the new digits.

4.4.2 DTMF Signalling

4.4.2.1 Available Tones

The following DTMF tones can be used:
[0] - [9], [A] - [D], [∗], and [#]

NOTE: Tone [B] is NOT available if the "Attach Decode No" field in the DTMF Encode Menu has been set to "ON".

Up to sixteen (16) DTMF digits can be encoded in one calling sequence.

4.4.2.2 DTMF Tone Entry

There are two methods of entering DTMF tones. The specific tone encoding format is selected during the programming of the KG510 transceiver in the <Main Menu><Encode Set><DTMF Encode><Attach Decode No.> field.

4.4.2.2.1 Attach Decode No. "OFF" format

Pressing the PTT lever first automatically selects the DTMF encoding format and allows direct entry of DTMF tones.
Hold the PTT lever on the microphone depressed while pressing the required DTMF tones. The tones will be transmitted as the keys are being pressed.

4.4.2.2.2 Attach Decode No. "ON" format

Attach Decode No. "ON" automatically encodes the users DTMF decode number after the encode number. This can be used for ANI purposes.
Enter the required DTMF tones (up to sixteen tones except "B" tone) and then transmit the total tone sequence (including the users decode number) by pressing the [#] key. All tones will be transmitted in one continuous sequence after pressing the [#] key.
Pressing the [∗] key will delete the last entered number.
Always confirm that the LCD is clear before proceeding as it may take up to 5 seconds for the tones to be sent.

e.g. Assume that your decode number is 12345, and that you wish to encode number 12346. You will input 12346, and then press the [#] key. The KG510 will encode 12346B12345. The called radio will display 12345 in their LCD indicating the calling party's number is 12345.

NOTE: The "B" tone is used as the delimiter in this encoding format and therefore CANNOT be used as a DTMF tone.

Pressing the [SHIFT] key and then the [#] will encode ONLY the encode number (and not the decode number).

4.4.2.3 Redialling with DTMF

If during the programming of the KG510, the <Attach Decode No> field has been set to "OFF", the redialling function operates as follows:

Press [SHIFT], then press [#] and the KG510 will redial the last encoded DTMF number.

If during the programming of the KG510, the <Attach Decode No> field has been set to "ON", the redialling function operates as follows:

Press [#] and the KG510 will redial the last encoded DTMF number **with** the KG510's programmed decode number.

Press [SHIFT], and then press [#] and the KG510 will redial the last encoded DTMF number **without** the KG510's programmed decode number.

4.4.2.4 Restoring the last DTMF number to the LCD Display

It is possible to restore the last encoded DTMF number to the LCD display, provided the <Attach Decode No> field has been set to "ON" during the programming of the KG510 transceiver.
Confirm that the LCD is NOT displaying any DTMF numbers, then press [∗] and the last encoded DTMF number will be displayed in the LCD display.
It is possible to edit this number at this time by pressing the [∗] key (which will erase the last number) or by pressing the required keys to add additional numbers.

4.4.2.5 Encoding DTMF numbers with the 5-Tone system enabled

It is possible to enter DTMF numbers even with the 5-Tone system enabled. This function must be enabled during the programming of the KG510 by setting the <DTMF Encode> field in the <5Tone Encode Menu> to "ENABLE".

To enter a DTMF number (with 5-Tone signalling enabled), the user must press the PTT lever while entering the first DTMF number. Second and subsequent numbers do NOT require the PTT lever to be pressed provided all numbers are entered within a few seconds (before the display reverts to 5-Tone mode and displays "5TON" in the LCD display).

4.4.3 Single Tone Encoding

The KG510 has the ability to encode one of six single tone frequencies for 1, 2, 3, or 4 seconds. This function is enabled during programming of the KG510 by selecting the <Single Tone ON> field in the <Encode Menu> and setting the encode period.

Press the [SHIFT] and the [4] keys to put the KG510 into Single Tone Encoding mode. "S1" and the tone frequency ("xxxxHz") will be displayed in the tone area of the LCD display for about 4 seconds until the KG510 reverts back to the normal signalling mode.
While the KG510 is in Single Tone Encoding mode, it is possible to advance to the next tone frequency by pressing the [A] key, or to return to the previous tone by pressing the [B] key.
Pressing the [#] key will encode the displayed tone (for the programmed time period) and automatically exits the Single Tone Encoding mode and returns the KG510 to the normal signalling mode.

4.4.4 KILL Signalling

The KG510 has the ability to transmit a specially coded signalling sequence that will disable ("KILL") another radio. This feature is particularly useful when transceivers become misplaced, are stolen, if they are used in an incorrect manner, or if they are used for the wrong purposes.
To prevent accidental or mischievous "KILLING" of radios, several security features are in place.
Firstly, the KG510 must have this function enabled during programming.
Secondly, the user must know the required password and enter it correctly into the KG510, and,
Thirdly, the user must know the required "KILL" number (of the radio to be "KILLED", and enter it correctly into the KG510.
The "KILL" password has four numerical digits. [0] to [9].

With 5-Tone signalling systems, the "KILL" number for a particular radio comprises of the radio's decode number + D + the radio's KILL number.

With DTMF signalling systems, the "KILL" number for a particular radio comprises of the radio's decode number + A + the radio's KILL number. In the case of DTMF signalling, both the decode number and the KILL number must have more than four digits.

4.4.4.1 Kill Signalling Operation

Press [SHIFT] and the press [6] to place the KG510 into the KILL mode.
The LCD display will indicate that the KG510 is in the KILL mode

```
RX
TX
CH01  Kyodo-co
      Kill Pass  --
```

Enter the required password by entering the correct four digit number.

If the password has been correctly entered, the LCD display will show this message:

```
RX
TX
CH01  Kyodo-co
      Kill Pass  OK
```

Then enter the "KILL" data from the keyboard that comprises of the decode number + D + the KILL number of the radio to be "KILLED". (In the case of DTMF signalling, it will be necessary to substitute the "A" tone instead of the "D" tone).
Then press [#] to transmit the data.

If the incorrect password has been entered, the LCD display will show the following message:

```
RX
TX
CH01  Kyodo-co
        Kill Pass  NG
```

If you enter the "KILL" data prior to entering the KILL password, and then press the [#] key, the LCD display will show the following message:

```
RX
TX
CH01  Kyodo-co
        Input Password
```

If the incorrect password has been entered more than the allowed number of tries, then the KG510 becomes disabled and the following message is displayed in the LCD display:

```
Not Ready
```

In such cases, it is necessary to return the KG510 to your radio supplier to have the KG510 repaired.

4.5 Scanning

The KG510 is supplied with two scanning modes. These are All Channel Scan mode in which the KG510 will scan all channels that are programmed into the KG510, and the Program Channel Scan mode in which the KG510 will scan only the channels that have been designated during the programming of the KG510 transceiver.
Furthermore, one HIGH priority, and one LOW priority scan channel can be set for each scan mode during the programming of the radio.

4.5.1 All Channel Scan Operation

Pressing the [SCAN] key places the KG510 into All Channel Scan mode and the Scan mode symbol "∞" is displayed in the LCD display. Also the LCD will display "All Scan Mode-in" for two seconds as shown below:

```
RX ======
TX
CH01  Kyodo-co     ∞
        All Scan Mode-in
```

4.5.2 Program Channel Scan Operation

Pressing the [SHIFT] and then the [SCAN] key places the KG510 into Program Channel Scan mode and the Scan mode symbol "∞" is displayed in the LCD display. Also the LCD will display "PRG Scan Mode-in" for two seconds as shown below:

```
RX ======
TX
CH01  Kyodo-co      ∞
      Prg Scan Mode-in
```

4.5.3 Exiting All Channel Scan and Program Channel Scan modes

Pressing the [SCAN] key will take the KG510 out of either scanning mode and return the KG510 to normal mode. The scan symbol "∞" will be removed from the LCD display and the LCD will display "Scan Mode-out" for two seconds as shown below:

```
RX ======
TX
CH01  Kyodo-co
      Scan Mode-out
```

4.5.4 Priority Scanning

The KG510 allows users to firstly enter the required scanning mode, and then they can enable Priority Scanning for the particular scanning mode chosen.

Pressing the [SHIFT] key and then the [9] key places the KG510 into Priority Scanning mode as shown below:

```
RX ======
TX
CH01  Kyodo-co      ●●
      Priority Scan
```

Pressing the [SHIFT] and the [9] keys again will take the KG510 out of Priority Scan mode and return to the Normal Scan mode as shown below:

```
RX =====
TX
CH01  Kyodo-co      ∞
      Normal Scan
```

4.5.5 Removing an Active Channel from the Scan List

It is possible to temporarily delete an active channel from the scan list by pressing [SHIFT] and the [∗] key and holding the [SHIFT] and the [∗] keys depressed for more than one second. More than one channel can be deleted from the Scan list, provided that at least one channel remains in the Scan List.
A "beep" sound from the radio confirms correct deletion of the channel from the scan list.
This function CANNOT be used in the Priority Scan mode.
The KG510 automatically restores all channels to their respective scanning list as soon as the KG510 exits from the scan mode.

4.5.6 Restoring Channels to the Scan List

Channels can be restored to the scanning list without exiting from the scan mode by pressing the [SHIFT] key and pressing and holding the [A] key depressed for more than one second.
This action will restore all channels to the scan list.
This action CANNOT be used in the Priority Scan mode.

4.6 Locking the Keypad

Pressing the [SHIFT] key and then the [8] key will lock all keys (except the [SHIFT] and [MON] keys) on the KG510's keypad to prevent accidental or inadvertent entry of data.
After pressing the [SHIFT] and [8] keys the keypad becomes locked and the Key-Lock symbol is displayed in the LCD display. The display also shows "Key-Lock" for two seconds as shown below:

```
RX ======
TX
CH01  Kyodo-co
      Key Lock
```

Pressing [SHIFT] and [8] again will Unlock the keypad, remove the Key-Lock symbol from the LCD display, and display "Key-Unlock" in the LCD display for two seconds as shown below:

```
RX ======
TX
CH01  Kyodo-co
      Key Unlock
```

4.7 Changing Tone Signalling Systems

It is possible to switch the KG510's tone signalling system among 5-Tone sequential signalling, DTMF signalling and Non(No-Tone system) (providing the <Miscellaneous Menu> <Tone System Change> field was set to "ENABLE" during the programming of the KG510).

Press [SHIFT] and keep depressed the [0] key for more than one second to change among 5-Tone system, DTMF system and Non and indicate new signalling system in the LCD display as follows:

```
RX ======
TX
CH01  Kyodo-co
      System is DTMF
```

Pressing [SHIFT] and pressing the [0] key for more than one second again will change next the signalling system and indicate new signalling system in the LCD display as shown below:

```
RX =======
TX
CH01  Kyodo-co
      System is Non
```

4.8 Displaying the Channel Information

The KG510 can display information pertaining to the selected channel (provided that the <Miscellaneous Menu> <Information Display> field was set to "ENABLE" during the programming of the radio.
This information is:

- The RX frequency of the selected channel.
- The TX frequency of the selected channel.
- The channel spacing for the selected channel (Wide or Narrow).
- The operating mode for the selected channel (Base, Repeater, simplex, duplex)
- The RX CTCSS/DCS tone for the selected channel (provided CTCSS/DCS has been programmed for use on the selected channel).
- The TX CTCSS/DCS tone for the selected channel (provided CTCSS/DCS has been programmed for use on the selected channel).
- The tone encoding format (providing 5-Tone signalling was selected during programming of the KG510).
- The tone set (providing 5-Tone signalling was selected during programming of the KG510).
- The ANI mode.
- The tone decoding set (provided 5-Tone or DTMF signalling was selected during programming of the KG510).
- The decode number (provided 5-Tone or DTMF signalling was selected during programming of the KG510).

To view this information in the LCD display, firstly select the required channel. Then press the [SHIFT] key and then the [7] key. You will need to keep the [7] key pressed until the KG510 has cycled through the information steps.

This function is NOT available if the <Miscellaneous Menu> <Information Display> field has been set to "DISABLE" during the programming of the KG510.

4.9 Display of Received Tone Frequencies.

It is possible to set the KG510 to display the received tone frequencies in the LCD display in the area normally used to display the strength of the received signals.
Press [SHIFT] and then press [D] to enable this function.
Once enabled, the LCD will show "RCV" in the area of the LCD display that normally shows the strength of the received signal, as well as "Tone Display on" for two seconds as shown below:

```
RCV
TX
CH01  Kyodo-co
      Tone Display On
```

Then, whenever a tone frequency is decoded, the frequency number will be displayed in the LCD display to the right of "RCV" as shown below:

```
RCV  12345
TX
CH01  Kyodo-co
5TON
```

Pressing the [SHIFT] key and then the [D] key once again will disable this function and return the LCD display to normal as shown below:

```
RX
TX
CH01  Kyodo-co
      Tone Display Off
```

4.10 Bar Graph Displays

The KG510 will normally show the strength of the received signal to the right of "RX" in the LCD display, and the strength of the transmitted signal to the right of "TX" in the LCD display, both in the form of a bar graph.
This function can be disabled by pressing the [SHIFT] key and then the [CH] key. The LCD display will indicate "RX Display Off" and "TX Display Off" as shown below:

```
RX  Display Off
TX  Display Off
CH01  Kyodo-co
```

Pressing the [SHIFT] key and then the [CH] key once again will return the KG510 to normal and the LCD display will show the normal bar graph display for both the RX signal strength and TX signal strength.

4.11 LCD Display Back Light

The LCD Display has a Back-Light to illuminate the display. It normally switches "ON" whenever any key or the PTT lever is pressed, and will remain illuminated for five seconds after the most recent key press. Some users may prefer the Back-Light to remain illuminated to assist viewing the LCD display in poor viewing situations.
Press the [SHIFT] key and then press the [1] key for more than one second and the LCD Back-light will remain illuminated.
Once again, press the [SHIFT] key and then press the [1] key for more than one second and the LCD Back-light will revert to normal operation.

4.12 Transmit Power Change

It is possible to change the KG510's transmit power from the high power setting to the low power setting from the keypad and vice versa (provided that this function has been enabled during the programming of the KG510).
To enable this function, the <Miscellaneous Menu> <TX Power Change> field must be set to "ENABLE".
Press the [SHIFT] key and the [2] key and the KG510 will change from the high transmit power setting to the low transmit power setting, and the "▶"symbol will be removed from the third line of the LCD display.
Press the [SHIFT] key and the [2] key a second time, and the KG510 will change from the low transmit power setting to the high transmit power setting, and the "▶" symbol will be displayed in the third line of the LCD display.
If this function is NOT required, the <Miscellaneous Menu> <TX Power Change> field must be set to "DISABLE".

4.13 Calling Party ID Display

The KG510 has the capability to display a calling radio's ID (ANI) number after being called. When the KG510 is called, "CALL" will be displayed on the fourth line of the LCD display (and continue to flash) and the calling radio's ID number will be displayed to the right of "CALL" as shown below:

```
RX
TX
CH01  Kyodo-co
CALL 12346
```

If the KG510 user presses the [#] key (when "CALL" is flashing and the caller's ID number is displayed), the KG510 will automatically call the identified radio.

In the case of 5-Tone signalling systems, this function is enabled in the <5Tone Encode Menu> <Encode Format> field, by selecting one of the following parameters:

"Encode + B + Decode"
"Encode + A.Pause + Decode"
"Decode + A.Pause + Encode"
"Encode + ANI"

In the case of DTMF signalling systems, this function is enabled by setting the <DTMF Encode Menu> <Attach Decode No> field to "ON" during the programming of the KG510.

4.14 Displaying any Radio's ID Number

The KG510 has the capability to display any calling radio's ID (ANI) number. When the KG510 receives an ANI number, "DISP" will be displayed on the fourth line of the LCD display (and continue to flash) and the radio's ID number will be displayed to the right of "DISP" as shown below:

```
RX
TX
CH01  Kyodo-co
DISP  1234
```

In the case of 5-Tone signalling systems, this function is enabled by setting the <5Tone Decode Menu> <ANI Receive> field to "ON" during the programming of the KG510.
In the case of DTMF signalling systems, this function is enabled by setting the <DTMF Decode Menu> <ANI Receive> field to "ON" during the programming of the KG510.

4.15 Emergency Caller Display

The KG510 has the ability to accept and display emergency calls from other radios within the radio system
This function is enabled by setting the <Emg Call Receive> field to "ON" in the <5Tone Decode Menu> or <DTMF Decode Menu> during the programming of the radio.
The calling (Emergency) radio must encode its emergency data in the following format:

"000" + the calling radio's ID (decode number).

This format applies to both 5 Tone and DTMF signalling systems.
When the KG510 receives an emergency call, the KG510 will sound a warning tone from the speaker, display "EMG" (flashing) in the fourth line of the LCD display, and display the emergency radio's ID to the right of "EMG" as shown below:

```
RX
TX
CH01  Kyodo-co
EMG  12346
```

Upon receipt of an emergency call, the KG510 will automatically respond to the emergency radio by sending the emergency radio's ID number to it.
If the KG510 user presses the [#] key, the KG510 will resend the emergency radio's ID number.
While the KG510 is in the Emergency Mode, all keys (except the [#] key) on the keyboard become disabled.
Pressing the [SHIFT] key and the [∗] key will return the KG510 to the normal operating mode.

4.16 Automatic Transmit in Repeater Mode

The KG510 can be programmed to automatically repeat valid incoming messages. Firstly, the active channel of the KG510 must be programmed to operate as a repeater. It must then receive a carrier frequency on the designated channel. If the KG510 has been programmed for CTCSS or DCS operation, it must also receive a valid CTCSS or DCS tone. It will then automatically retransmit any received signals.
When the KG510 ceases to receive a carrier frequency, or a valid CTCSS or DCS tone, it activates the <Auto TX Reset Time> timer. This will keep the KG510 repeating (for up to 9.9 seconds depending on the programming of the KG510), and allow other users with a valid CTCSS or DCS tone to access the repeater.

4.17 TX Test Mode

The KG510 is provided with a TX (Transmit) Test Mode. When the KG510 is placed in the TX Test Mode, it will transmit a carrier frequency modulated with a 1KHz tone on the selected active channel. It is possible to change channels while in TX Test Mode.
Pressing the [SHIFT] key and then the [B] key places the KG510 in TX Test Mode and displays the message in the LCD as shown below:

RX
TX
CH01 Kyodo-co
TXT TX Test Mode-in

Pressing the [SHIFT] key and the [B] key a second time will return the KG510 to normal mode and displays the message in the LCD as shown below:

RX
TX
CH01 Kyodo-co
TXT TX Test Mode-out

4.18 Keypad Test Mode

The KG510 is provided with a Keypad Test Mode that allows the user to electrically test all keypad keys as well as the PTT Key.
Holding the [C] key pressed while switching the POWER SWITCH "ON" places the KG510 in Keypad Test Mode and displays the message in the LCD Display as shown below:

KEY TEST

Please Key-in

Then press the keys to be tested one at a time. The respective key will be displayed in the LCD when the key is operating correctly.
e.g. If you press the [CH] key, the LCD Display will indicate correct operation as shown below:

KEY TEST

CH Key

Switch the KG510 "OFF" to exit this Keypad Test Mode.

4.19 Frequency Band Test Mode

It is possible to display the KG510's operating Frequency Band in the LCD display when in Frequency Band Test Mode.
Holding the [B] key pressed while switching the POWER SWITCH "ON" places the KG510 in Frequency Band Test Mode and displays the operating Frequency Band in the LCD Display as shown below:

<PLL Band Check>>

40D OK

"40D" indicates the frequency band for a particular KG510 radio.

Switch the KG510 "OFF" to exit the Frequency Band Test Mode.

4.20 Starting Message

When the KG510 is Switched "ON", it will display a Starting Message in the LCD display for two seconds. The default Starting Message (using all dots) is shown below:

<51BS V095 510>

A personalised message for your business may be shown as the Starting Message. If you require a personalised message, then it should be entered in the <Miscellaneous Menu> <Starting Message> field during the programming of the radio. Such a message is shown below:

Kyodo-co Japan
<51BS V095 510>

4.21 Serial Number Display

It is possible to display the KG510's Serial Number in the LCD Display. To do so, the Serial Number must be entered into the <Configuration Menu> <Serial No.> field during the programming of the radio. The serial number can be up to eight characters long and can comprise of any of these characters: "A - Z" & "0 - 9".
Holding the [D] key pressed while switching the POWER SWITCH "ON" places the KG510 in Serial Number Display Mode and displays the KG510's Serial Number in the LCD Display as shown below:

Serial KY000727

Switch the KG510 "OFF" to exit from the Serial Number Display Mode.

4.22 EEROM Data Check Mode

As soon as the KG510 is switched "ON", it will automatically read and check all the data in the EEROM.
If this check finds damaged or corrupted data, the KG510 will automatically enter the Programming Mode and display the following message in the LCD Display:

EROM Data Error

Should this happen, it is necessary to return the KG510 to your radio supplier or to a competent radio trades-person who has the facilities to reprogram the KG510.

4.23 Hardware Error Detection

The KG510 automatically tests for certain hardware faults or failures, and when a fault is found, it will blink the "ALM" LED display above the LCD Display and indicate the nature of the fault in the LCD Display as shown below:

```
RX
TX
CH01  Kyodo-co
      RX PLL Error
```

This figure indicates an RX PLL error.

```
RX
TX
CH01  Kyodo-co
      TX PLL Error
```

This figure indicates a TX PLL error.

```
RX
TX
CH01  Kyodo-co
      PA Error
```

This figure indicates a PA error.

Should the KG510 indicate any of these errors, then it is necessary to return the KG510 to your radio supplier or to a competent radio trades-person to have the fault remedied.

4.24 RS232C Communications Error

If a fault is encountered during programming of the KG510, one of the following messages may be displayed in the LCD Display:

- Over Run Error
- Framing Error
- Parity Error
- Unknown Command
- Data Unmatch
- Send Error
- Answer Timeout
- Receive Timeout

Please switch the KG510 "OFF", and then back "ON", and retry reprogramming the KG510 again, should any of the above error messages be displayed in the LCD Display.

4.25 LOW Battery Detection

If battery supply voltage goes down to 10.8V while repeater Tx operation, the alert tone is automatically transmitted after the Tx is terminated.

6. CIRCUIT DESCRIPTION

6.1 RECEIVER PART

1) RF section

An incoming signal is fed to pre-selector (BPF-101), and amplified by Q101, then fed to post-selector (BPF-102). The balanced mixer, consisting of T101, T102, D107 and D108, produces 48.5MHz by injection from the 1st local signal provided by Rx VCO (the 1st local of the 30MHz bands KG510 radios are 21.6MHz).

2) IF section

The output signal from the balanced mixer is fed to the crystal filters (XF101), then amplified by Q103. Again, this signal is fed to the 4-pole crystal filters and amplified by Q113. After amplified by Q113, signal is fed to 2nd processor IC (IC106). The 2nd local crystal oscillator signal is fed to IC106 to produce the 2nd local signal (455KHz). IV106 amplifies the 2nd local signal and becomes an audio signal by detector circuit inclusive within the IC106. Then, the audio signal is fed to the low-pass filter inclusive in IC107, and fed to audio processor IC (IC3).

3) VCO section

The oscillator circuit formed by L303, D303, D305 and Q301 produces the 1st local signal (Rx frequency plus 48.5MHz). The 1st local signal is amplified by buffer amplifier Q302, and again amplified by pre-amplifier IC301m and post amplifier Q303. The amplified signal is fed to the balanced mixer.

4) PLL section

PLL IC inclusive with pre-scaller IC101 compares the phase between the VCO frequency and reference oscillator frequency (12.00MHz) by method of dividing the frequency, and produces VCO control signal. Then, this control signal is fed to the charge pump, consisting of Q108, Q109 and Q110, and fed to the LPF. The supply voltage of charge pump is multiplied by IC102 (approx. 15V) to achieve greater C/N ratio.

6.2 TRANASMITTER PART

1) VCO section

The oscillator circuit formed by L303, D305 and D306 generates transmitter frequencies. Then this signal is fed to the 3-stage of amplifiers, buffer amplifier Q302, pre-amplifier IC301 and post amplifier Q303 and lead to the final amplifier.

2) PLL section

Basically, the circuit description is the same as Rx. PLL IC inclusive with pre-scaller IC205 compares the phase between the VCO signal and reference oscillator frequency (12.00MHz) by method of dividing the frequency, and produces VCO control signal. Then this VCO control signal is fed to the charge pump, consisting of Q206, Q207 and Q208, and fed to the LPF. The supply voltage of charge pump is amplified by IC206 (approx. 15V) to achieve greater C/N ratio.

3) Modulator section

The modulation signal is fed to both VCO and the reference oscillator (TCVXO), this permits a very flat modulation characteristics against low frequency (DC). This is the advantage when KG510 is used for POCSAG transmitter.

4) Tx younger section

The VCO signal is amplified by Q215 and Q216 to achieve 250mW.

5) PA section

The signal from younger stage is fed to Q508 (semi-driver), Q506 (driver) and Q501 (final) to achieve 50W output power. Then, signal is fed to the LPF to eliminate the harmonics spurious frequencies. An APC circuit formed by IC502, IC503, Q504 and Q505 stabilizes the output power at the set level. An IC501 protects PM501 and Q501 from the reverse power caused by the unmatched aerials.

6.3 LOGIC PART

1) Microcomputer (CPU) section

A CPU, IC-1, uPD78F005 is the 8-bit processor contained 60K flash memory and 2K RAM inside. This CPU controls all functions of KG510. A flash memory permits ON-BOARD-UP-GRADE when the new software is released.

2) EE ROM section

An IC7 is the 64kbit EEROM. This IC contains all channel parameters

3) Audio processor section

An IC2 is for Tx and an IC3 is for Rx audio processor. These IC's control all audio processing and encode/decode CTCSS tones commanded by CPU. These IC's are also inclusive with 2400bps MODEM to enable to form MPT1327 trunking protocols by using an external MPT control software.

6.4 FRONT CONTROL PANEL PART

1) LCD display section

LCD display is constructed by 128 x 32 dot matrix. This allows to indicate not only characters but also graphics and symbols as you design.

2) LED display section

The 4 LED's are indicating each mode of operation KG510 now works.

3) Audio amplifier section

An IC404 has 2w audio power to drive 8 ohm speaker mounted on the panel

4) Microphone pre-amplifier section

An IC401 is the voice pre-amplifier having –34dBm output to feed Tx modulator.

6-5 REMOTE CONTROL

25 pin D-sub connector for remote control is provided on the rear panel of KG510. The functions of each pins are as follows;

- CH 0
- CH 1
- CH 2
- CH 3
- CH 4
- CH 5
- GROUND
- RSSI
- DISC. OUT
- SQ. CONT.
- BUSY
- MUTE
- MOD-1

 GROUND
 PTT
 MOD-2
 SIMPLEX
 ERROR
 DECODE
 RX AUD-1
21 RX AUD-2
22 TX OUT
23 EXT. POW SW
24 REMOTE
25 +12V

7. ALIGNMENT PROCEDURES

7.1 RECEIVER PART

1) BPF-101 and BPF-102 alignment
Connect the signal generator to the Rx antenna connector of KG510. Align the BPF-101 and BPF-102 to obtain the maximum sensitivity. For better alignment, if you have spectrum analyzer and tracking generator, connect the tracking generator to the Rx antenna connector and pick up the output signal from J101 to connect spectrum analyzer. Align the BPF-101 and BPF-102 to have cover the desired bandwidth of receiving frequencies.

2) FVR101 alignment
This is to adjust the squelch tight level.

3) VCO alignment
The VCO has been aligned at the factory to cover full bandwidth. However, if you need to re-adjust the VCO when you repair, set the VCO voltage at 10.5V by L303 at the highest sub band frequency.

7.2 TRANSMITTER PART

1) FVR201 alignment
This potentiometer determines the modulation level. Carefully align this potentiometer to obtain flat deviation from the lowest to the highest frequency installed n the transmitter.

2) FVR202 alignment
This potentiometer determines the low frequency (below 300Hz) deviation. When POCSAG, CTCSS or DCS are used, necessary to align to have enough deviation at low frequency.

3) FVR203 alignment
This potentiometer sets the maximum deviation, normally set at 5KHz. 2KHz or 2.5KHz deviation for narrow spacing can be set by programming software.

4) FVR204 alignment
This is to adjust the transmitter output power.

5) VCO alignment
The VCO has already been aligned at the factory, however if you need to re-adjust, set the VCO voltage at 10.5V at the highest sub band frequency.

7.3 POWER AMPLIFIER PART

1) FVC505
   This variable capacitor to be adjusted to gain the maximum efficiency as well as the maximum power output at the final transistor of the power amplifier.

2) FVR501
   This potentiometer to be adjusted at the minimum reverse power detecting point when the antenna is terminated with 50 ohms load.

3) FVR502
   This potentiometer to be set at the point where reverse power is detected.

4) FVR503
   This potentiometer to be set at the point where low-power-alarm is detected.

5) FVR504
   This potentiometer to be set at the maximum power from the power module, however, do not adjust exceeding 70 watts.

7.4 LOGIC PART

1) FVR1 alignment
   This potentiometer is to obtain 600 ohm 0dBm output of the RF signal.

2) FVR2 alignment
   This is to set the deviation level when KG510 is used for a repeater.

3) FVR3 alignment
   This is to set the Tx output power level indicating on the LCD.

4) FVC1 alignment
   This is to shift the CPU clock frequency when necessary. A beat interference sometimes happens at certain frequency. In such case, shifting the CPU clock frequency may eliminate the interference.

7.5 FRONT CONTROL PANEL PART

1) VR401 alignment
   This is a volume controller.

2) VR402 alignment
   This is a squelch level controller.

3) FVR401 alignment
   This is to set the HI-POWER-LEVEL of the Tx output power.

4) FVR402 alignment
   This is to set the LO-POWER=LEVEL of the Tx output power.

5) FVR403 alignment
   This is to set the contrast of the LCD back light.

7.6 Voltage Chart

Voltage Chart

1□ 1 LOGIC UNIT

REF.	DESCRIPTION	FUNCTION	GATE	DRAIN	SOURCE
Q2	2SK209	SQ OPEN	3.5V	3.0V	3.0V
		SQ TIGHT	0V	3.0V	0.5V
Q3	2SK209	SQ OPEN	3.5V	3.0V	3.0V
		SQ TIGHT	0V	3.0V	0.5V
Q4	2SK209	BASE	0V	2.5V	0.5V
		REPET	3.0V	2.5V	2.5V
Q5	2SK2731	BASE	0V	0V	0V
		REPET	0V	3.7V	0V

REF.	DESCRIPTION	FUNCTION	‡ @	‡ A	‡ B	‡ C	‡ D
IC10	TA75S01F	RX	0V	0V	0.5V	0V	4.9V
		TX	1.0V	0V	0.5V	3.7V	4.9V
IC11	BU4S81	BASE	4.9V	4.9V	0V	4.9V	5.0V
		REPET	0V	0V	0V	0V	5.0V
IC12	BU4S01	BASE	4.9V	4.9V	0V	4.9V	5.0V
		REPET	0V	0V	0V	4.8V	5.0V
IC15	BU4S81	SQ OPEN	4.9V	4.9V	0V	4.9V	5.0V
		SQ TIGHT	0V	0V	0V	0V	5.0V

REF.	DESCRIPTION	FUNCTION	‡ @	‡ A	‡ B	‡ C
IC14A	TS272CD		3.0V	3.0V	3.0V	0V

REF.	DESCRIPTION	FUNCTION	‡ D	‡ E	‡ F	‡ G
IC14B	TS272CD	SQ OPEN	1.1V	1.1V	1.1V	12.0V
		SQ TIGHT	0V	0V	0V	12.0V

REF.	DESCRIPTION	FUNCTION	‡ @	‡ A	‡ B	‡ C	‡ D	‡ E	‡ F	‡ G
IC16	NJM2073		5.8V	12.0V	5.8V	0V	0.5V	0V	0V	0.5V

Voltage Chart

1□ 2 FRONT UNIT

REF.	DESCRIPTION	FUNCTION	BASE	EMITTER	COLLECTOR
Q410	2SA1431		6.9V	6.3V	12.0V

REF.	DESCRIPTION	FUNCTION	‡ @	‡ A	‡ B	‡ C	‡ D
IC401	TA75S558F		2.9V	0V	2.9V	2.9V	5.0V
IC404	LA4425A		1.4V	0V	0V	5.8V	12.5V

REF.	DESCRIPTION	FUNCTION	‡ @	‡ A	‡ B	‡ C	‡ D	‡ E	‡ F	‡ G
IC406	NJU7662M		5.3V	6.1V	0V	□ 6.0V	□ 12.0V	5.2V	7.9V	12.1V

Voltage Chart

4□ 1 PA UNIT

REF.	DESCRIPTION	FUNCTION	BASE	EMITTER	COLLECTOR
Q502	DTC124EKA	TX OFF	0V	0V	12.8V
		TX ON	2.3V	0V	0V
Q503	DTB143EK	TX OFF	13.0V	13.2V	0V
		TX ON	8.2V	12.9V	12.8V
Q504	2SC2412K	POWER 50W	1.5V	0.8V	1.4V
		POWER MAX	1.7V	1.1V	1.2V
Q505	2SB1018A	POWER 50W	12.3V	9.0V	12.9V
		POWER MAX	12.1V	11.0V	12.8V

REF.	DESCRIPTION	FUNCTION	GATE	DRAIN	SOURCE
Q507	2SK2731	TX OFF	3.5V	0V	0V
		TX ON	0V	12.8V	0V

REF.	DESCRIPTION	FUNCTION	‡ @	‡ A	‡ B	‡ C	‡ D	‡ E	‡ F	‡ G
IC501	BAM4558F	POWER 50W	1.4V	2.2V	1.7V	0V	2.6V	3.4V	1.4V	7.4V
		POWER MAX	1.5V	2.3V	1.7V	0V	2.7V	3.8V	1.5V	7.4V
		ANT OPEN	4.8V	2.3V	2.4V	0V	4.4V	3.4V	5.2V	7.4V

REF.	DESCRIPTION	FUNCTION	‡ @	‡ A	‡ B	‡ C	‡ D
IC502	TA75S01F	POWER 50W	3.3V	0V	3.8V	1.8V	7.4V
		POWER MAX	3.7V	0V	4.1V	2.2V	7.4V
		ANT OPEN	3.3V	0V	5.1V	1.5V	7.4V

Voltage Chart

4□ 2 RX UNIT

REF.	DESCRIPTION	FUNCTION	BASE	EMITTER	COLLECTOR
Q104	DTB143EK	RX	3.8V	7.3V	7.3V
		TX	0V	0V	0V
Q113	2SC4250		2.3V	1.6V	4.4V
Q114	DTC314TK	WIDE	0V	0V	7.2V
		NARROW	5.0V	0V	0V
Q117	DTA144EUA	RX	7.3V	7.4V	3.8V
		TX	0V	7.5V	7.5V
Q118	DTB143EK	RX	3.3V	7.4V	7.3V
		TX	7.5V	7.5V	0V
Q119	DTC114EKA	RX	4.0V	0V	0V
		TX	0V	0V	7.5V

REF.	DESCRIPTION	FUNCTION	GATE	DRAIN	SOURCE
Q103	2SK508		0V	1.1V	6.6V
Q115	2SK209	WIDE	7.1V	6.8V	6.8V
		NARROW	0V	6.8V	0.5V
Q116	2SK209	WIDE	7.1V	7.3V	7.3V
		NARROW	0V	7.3V	7.3V
Q120	2SK3018	RX	0V	4.0V	0V
		TX	3.5V	0V	0V

REF.	DESCRIPTION	FUNCTION	‡ @	‡ A	‡ B	‡ C	‡ D	‡ E	‡ F	‡ G
IC102	NJU7662M		6.3V	11.1V	7.4V	3.7V	0V	6.3V	11.1V	14.7V

REF.	DESCRIPTION	FUNCTION	‡ @	‡ A	‡ B	‡ C	‡ D	‡ E	‡ F	‡ G	‡ H	‡ I
IC106	TK10487M		7.2V	6.5V	0V	6.8V	7.3V	6.4V	6.4V	6.4V	7.2V	7.3V
			‡ J	‡ K	‡ L	‡ M	‡ N	‡ O	‡ P	‡ Q	‡ R	‡ S
			3.1V	2.9V	1.4V	1.4V	1.7V	0V	5.0V	0V	0V	1.9V

Voltage Chart

4□ 3 RX VCO UNIT

REF.	DESCRIPTION	FUNCTION	BASE	EMITTER	COLLECTOR
Q302	2SC4250	RX	3.2V	2.5V	4.7V
		TX	3.3V	2.5V	4.3V
Q303	2SC3583	RX	1.9V	1.6V	6.7V
		TX	0V	0V	7.5V
Q304	DTA124EKA	RX	1.9V	6.7V	6.6V
		TX	1.9V	6.7V	6.6V
Q305	2SD2351	RX	7.4V	6.7V	7.4V
		TX	7.5V	6.8V	7.5V
Q306	DTA124EKA	RX	1.3V	7.4V	7.2V
		TX	7.5V	7.5V	0V

REF.	DESCRIPTION	FUNCTION	GATE	DRAIN	SOURCE
Q301	2SK508	RX	0V	5.0V	2.0V
		TX	0V	5.0V	2.0V

REF.	DESCRIPTION	FUNCTION	‡ @	‡ A	‡ B	‡ C
IC301	ƒ ÊD1688		3.2V	0V	0.9V	4.9V

Voltage Chart

4□ 4 TX UNIT

REF.	DESCRIPTION	FUNCTION	BASE	EMITTER	COLLECTOR
Q201	DTC124EKA	RX	0V	0V	7.5V
		TX	3.8V	0V	0.1V
Q212	2SB1184	TX	11.5V	12.2V	7.6V
Q215	2SC2954	TX	0.6V	0.4V	6.4V

REF.	DESCRIPTION	FUNCTION	‡ @	‡ A	‡ B	‡ C	‡ D	‡ E	‡ F	‡ G
IC203	TS272CD		2.5V	2.5V	2.5V	0V	2.5V	2.5V	2.5V	7.5V
IC206	NJU7662M		6.2V	11.0V	7.3V	3.7V	0V	6.2V	10.8V	14.5V
IC209	NJM2904	TX	6.4V	6.4V	7.4V	0V	2.1V	2.5V	0V	7.6V
		TX UNLOCK	0V	0V	0V	0V	4.6V	2.4V	6.0V	7.5V

REF.	DESCRIPTION	FUNCTION	‡ @	‡ A	‡ B	‡ C	‡ D
IC204	TA75S01F		2.5V	0V	2.5V	2.5V	7.5V

Voltage Chart

4□ 5 TX VCO UNIT

REF.	DESCRIPTION	FUNCTION	BASE	EMITTER	COLLECTOR
Q302	2SC4250	RX	0V	0V	7.5V
		TX	3.2V	2.7V	4.4V
Q303	2SC3583	RX	0V	0V	7.5V
		TX	2.0V	1.7V	6.9V
Q304	DTA124EKA	RX	7.1V	7.1V	0V
		TX	2.3V	6.8V	6.8V
Q305	2SD2351	RX	7.5V	7.1V	7.5V
		TX	7.6V	6.9V	7.6V
Q306	DTA124EKA	RX	7.5V	7.5V	0V
		TX	1.3V	7.6V	7.3V

REF.	DESCRIPTION	FUNCTION	GATE	DRAIN	SOURCE
Q301	2SK508	RX	0V	0V	0V
		TX	0V	5.0V	2.0V

REF.	DESCRIPTION	FUNCTION	‡ @	‡ A	‡ B	‡ C
IC301	ƒ ÊD1688		3.3V	0V	0.8V	5.0V

SYSTEM CONFIGURATIONS

8-1 Simplex base station (a coax relay is required)
8-2 Repeater station mode
8-3 Channel combined base and repeater mode
8-4 3 + 1 system with ACU-31 automatic change over unit
8-5 Remote control mode

9. SPECIFICATIONS

9.1 General

Frequency Range	Version A 66 - 78MHz Version B 74 - 88MHz
Number of Channels	99 channels with name
Channel Spacing	12.5/20/25/30KHz
Operation Mode	Simplex/Semi Duplex/Full Duplex
Antenna Impedance	50 ohm unbalanced
Power Supply	DC 13.6V negative ground only
Consumption	12 amperes or less
Enviromental Conditions	-30 to +60 degree C, 95% humidity @35C
Dimensions	462 (w) 88 (h) 360 (d) mm
Weight	11 kgs.

9.2 Transmitter

Output Power	50W/25W continuous
Switchable Bandwidth	Full sub band
Frequency Deviation	5KHz(wide band) 2.5KHz(narrow band)
Frequency Stability	+/- 1KHz
Frequency Response	Within +1, -3dB, 300-3000Hz @1KHz ref.
Signal to Noise Ratio	50dB or more @1KHz 70% mod. (45dB at narrow)
Modulation Distortion	3% or less
Spurious & Harmonics	0.25uW or less

9.3 Receiver

Switchable Bandwidth	3MHz
IF Frequencies	1st IF 48.5MHz, 2nd IF 455KHz
Frequency Stability	+/- 1KHz
Sensitivity	0.4uV or less for 20dB N.Q. / 0.3uV for 12dB SINAD
Squelch Sensitivity	0.25uV or less
Selectivity	70dB or more at 25KHz
Blocking	90dB or more
Intermodulation	70dB or more
Spurious Response	70dB or more
AF Response	Within +1, -3dB, 300-3000Hz @1KHz ref.
AF Distortion	5% or less @1KHz 70% mod
. Signal to Noise Ratio	50dB or more @1KHz 70% mod. (45dB at narrow)

6. CIRCUIT DESCRIPTION

6.1 RECEIVER PART

1) RF section

An incoming signal is fed to pre-selector (BPF-101), and amplified by Q101, then fed to post-selector (BPF-102). The balanced mixer, consisting of T101, T102, D107 and D108, produces 48.5MHz by injection from the 1st local signal provided by Rx VCO (the 1st local of the 30MHz bands KG510 radios are 21.6MHz).

2) IF section

The output signal from the balanced mixer is fed to the crystal filters (XF101), then amplified by Q103. Again, this signal is fed to the 4-pole crystal filters and amplified by Q113. After amplified by Q113, signal is fed to 2nd processor IC (IC106). The 2nd local crystal oscillator signal is fed to IC106 to produce the 2nd local signal (455KHz). IV106 amplifies the 2nd local signal and becomes an audio signal by detector circuit inclusive within the IC106. Then, the audio signal is fed to the low-pass filter inclusive in IC107, and fed to audio processor IC (IC3).

3) VCO section

The oscillator circuit formed by L303, D303, D305 and Q301 produces the 1st local signal (Rx frequency plus 48.5MHz). The 1st local signal is amplified by buffer amplifier Q302, and again amplified by pre-amplifier IC301m and post amplifier Q303. The amplified signal is fed to the balanced mixer.

4) PLL section

PLL IC inclusive with pre-scaller IC101 compares the phase between the VCO frequency and reference oscillator frequency (12.00MHz) by method of dividing the frequency, and produces VCO control signal. Then, this control signal is fed to the charge pump, consisting of Q108, Q109 and Q110, and fed to the LPF. The supply voltage of charge pump is multiplied by IC102 (approx. 15V) to achieve greater C/N ratio.

6.2 TRANASMITTER PART

1) VCO section

The oscillator circuit formed by L303, D305 and D306 generates transmitter frequencies. Then this signal is fed to the 3-stage of amplifiers, buffer amplifier

Q302, pre-amplifier IC301 and post amplifier Q303 and lead to the final amplifier.

2) PLL section

Basically, the circuit description is the same as Rx. PLL IC inclusive with pre-scaller IC205 compares the phase between the VCO signal and reference oscillator frequency (12.00MHz) by method of dividing the frequency, and produces VCO control signal. Then this VCO control signal is fed to the charge pump, consisting of Q206, Q207 and Q208, and fed to the LPF. The supply voltage of charge pump is amplified by IC206 (approx. 15V) to achieve greater C/N ratio.

3) Modulator section

The modulation signal is fed to both VCO and the reference oscillator (TCVXO), this permits a very flat modulation characteristics against low frequency (DC). This is the advantage when KG510 is used for POCSAG transmitter.

4) Tx younger section

The VCO signal is amplified by Q215 and Q216 to achieve 250mW. But VHF bands (136-174MHz) has only one stage of amplifier Q215 to achieve 100mW.

5) PA section

The signal from younger stage is fed to PM1 to achieve 50W output power. Then, signal is fed to the LPF to eliminate the harmonics spurious frequencies. An APC circuit formed by IC502, IC503, Q504 and Q505 stabilizes the output power at the set level. An IC501 protects PM1 from the reverse power caused by the un-matched aerials.

6.3 LOGIC PART

1) Microcomputer (CPU) section

A CPU, IC-1, uPD78F005 is the 8-bit processor contained 60K flash memory and 2K RAM inside. This CPU controls all functions of KG510. A flash memory permits ON-BOARD-UP-GRADE when the new software is released.

2) EE ROM section

An IC7 is the 64kbit EEROM. This IC contains all channel parameters

3) Audio processor section

An IC2 is for Tx and an IC3 is for Rx audio processor. These IC's control all audio processing and encode/decode CTCSS tones commanded by CPU. These IC's are also inclusive with 2400bps MODEM to enable to form MPT1327 trunking protocols by using an external MPT control software.

6.4 FRONT CONTROL PANEL PART

1) LCD display section

LCD display is constructed by 128 x 32 dot matrix. This allows to indicate not only characters but also graphics and symbols as you design.

2) LED display section

The 4 LED's are indicating each mode of operation KG510 now works.

3) Audio amplifier section

An IC404 has 5w audio power to drive 8 ohm speaker mounted on the panel

4) Microphone pre-amplifier section

An IC401 is the voice pre-amplifier having –34dBm output to feed Tx modulator.

6-5 REMOTE CONTROL

25 pin D-sub connector for remote control is provided on the rear panel of KG510. The functions of each pins are as follows;

① CH 0
② CH 1
③ CH 2
④ CH 3
⑤ CH 4
⑥ CH 5
⑦ GROUND
⑧ RSSI
⑨ DISC. OUT
⑩ SQ. CONT.
⑪ BUSY
⑫ MUTE
⑬ MOD-1

⑭ GROUND
⑮ PTT
⑯ MOD-2
⑰ SIMPLEX
⑱ ERROR
⑲ DECODE
⑳ RX AUD-1
21 RX AUD-2
22 TX OUT
23 EXT. POW SW
24 REMOTE
25 +12V

7. ALIGNMENT PROCEDURES

7.1 RECEIVER PART

1) BPF-101 and BPF-102 alignment

Connect the signal generator to the Rx antenna connector of KG510. Align the BPF-101 and BPF-102 to obtain the maximum sensitivity. For better alignment, if you have spectrum analyzer and tracking generator, connect the tracking generator to the Rx antenna connector and pick up the output signal from J101 to connect spectrum analyzer. Align the BPF-101 and BPF-102 to have cover the desired bandwidth of the receiving frequencies.

2) FVR101 alignment

This is to adjust the squelch tight level.

3) VCO alignment

The VCO has been aligned at the factory to cover full bandwidth. However, if you need to re-adjust the VCO when you repair, set the VCO voltage at 10.5V by L303 at the highest sub band frequency.

7.2 TRANSMITTER PART

1) FVR201 alignment

This potentiometer determines the modulation level. Carefully align this potentiometer to obtain flat deviation from the lowest to the highest frequency

installed n the transmitter.

2) FVR202 alignment

This potentiometer determines the low frequency (below 300Hz) deviation. When POCSAG, CTCSS or DCS are used, necessary to align to have enough deviation at low frequency.

3) FVR203 alignment

This potentiometer sets the maximum deviation, normally set at 5KHz. 2KHz or 2.5KHz deviation for narrow spacing can be set by programming software.

4) FVR204 alignment

This is to adjust the transmitter output power.

5) VCO alignment

The VCO has already been aligned at the factory, however if you need to re-adjust, set the VCO voltage at 10.5V at the highest sub band frequency.

7.3 POWER AMPLIFIER PART

1) FVR501

This potentiometer to be adjusted at the minimum reverse power detecting point when the antenna is terminated with 50 ohms load.

2) FVR502

This potentiometer to be set at the point where reverse power is detected.

3) FVR503

This potentiometer to be set at the point where low-power-alarm is detected.

4) FVR504

This potentiometer to be set at the maximum power from the power module, however, do not adjust exceeding 70 watts.

7.4 LOGIC PART

1) FVR1 alignment

This potentiometer is to obtain 600 ohm 0dBm output of the RF signal.

2) FVR2 alignment

This is to set the deviation level when KG510 is used for a repeater.

3) FVR3 alignment

This is to set the Tx output power level indicating on the LCD.

4) FVC1 alignment

This is to shift the CPU clock frequency when necessary. A beat interference sometimes happens at certain frequency. In such case, shifting the CPU clock frequency may eliminate the interference.

7.5 FRONT CONTROL PANEL PART

1) VR401 alignment

This is a volume controller.

2) VR402 alignment

This is a squelch level controller.

3) FVR401 alignment

This is to set the HI-POWER-LEVEL of the Tx output power.

4) FVR402 alignment

This is to set the LO-POWER=LEVEL of the Tx output power.

5) FVR403 alignment

This is to set the contrast of the LCD back light.

7.6 Voltage Chart

Voltage Chart

1－1　LOGIC UNIT

REF.	DESCRIPTION	FUNCTION	GATE	DRAIN	SOURCE
Q2	2SK209	SQ　OPEN	3.5V	3.0V	3.0V
		SQ　TIGHT	0V	3.0V	0.5V
Q3	2SK209	SQ　OPEN	3.5V	3.0V	3.0V
		SQ　TIGHT	0V	3.0V	0.5V
Q4	2SK209	BASE	0V	2.5V	0.5V
		REPET	3.0V	2.5V	2.5V
Q5	2SK2731	BASE	0V	0V	0V
		REPET	0V	3.7V	0V

REF.	DESCRIPTION	FUNCTION	①	②	③	④	⑤
IC10	TA75S01F	RX	0V	0V	0.5V	0V	4.9V
		TX	1.0V	0V	0.5V	3.7V	4.9V
IC11	BU4S81	BASE	4.9V	4.9V	0V	4.9V	5.0V
		REPET	0V	0V	0V	0V	5.0V
IC12	BU4S01	BASE	4.9V	4.9V	0V	4.9V	5.0V
		REPET	0V	0V	0V	4.8V	5.0V
IC15	BU4S81	SQ　OPEN	4.9V	4.9V	0V	4.9V	5.0V
		SQ　TIGHT	0V	0V	0V	0V	5.0V

REF.	DESCRIPTION	FUNCTION	①	②	③	④
IC14A	TS272CD		3.0V	3.0V	3.0V	0V

REF.	DESCRIPTION	FUNCTION	⑤	⑥	⑦	⑧
IC14B	TS272CD	SQ　OPEN	1.1V	1.1V	1.1V	12.0V
		SQ　TIGHT	0V	0V	0V	12.0V

REF.	DESCRIPTION	FUNCTION	①	②	③	④	⑤	⑥	⑦	⑧
IC16	NJM2073		5.8V	12.0V	5.8V	0V	0.5V	0V	0V	0.5V

Voltage Chart

1－2　FRONT UNIT

REF.	DESCRIPTION	FUNCTION	BASE	EMITTER	COLLECTOR
Q410	2SA1431		6.9V	6.3V	12.0V

REF.	DESCRIPTION	FUNCTION	①	②	③	④	⑤
IC401	TA75S558F		2.9V	0V	2.9V	2.9V	5.0V
IC404	LA4425A		1.4V	0V	0V	5.8V	12.5V

REF.	DESCRIPTION	FUNCTION	①	②	③	④	⑤	⑥	⑦	⑧
IC406	NJU7662M		5.3V	6.1V	0V	－6.0V	－12.0V	5.2V	7.9V	12.1V

Voltage Chart

2－1　PA UNIT

REF.	DESCRIPTION	FUNCTION	BASE	EMITTER	COLLECTOR
Q502	DTC124EKA	TX　OFF	0V	0V	12.7V
		TX　ON	2.2V	0V	0V
Q503	DTB143EK	TX　OFF	13.0V	13.1V	0V
		TX　ON	8.1V	12.8V	12.8V
Q504	2SC2412K	POWER　50W	1.4V	0.8V	1.3V
		POWER　MAX	1.7V	1.1V	1.2V
Q505	2SB1018A	POWER　50W	12.2V	12.9V	9.2V
		POWER　MAX	12.0V	12.8V	12.5V

REF.	DESCRIPTION	FUNCTION	GATE	DRAIN	SOURCE
Q507	2SK2731	TX　OFF	3.5V	0V	0V
		TX　ON	0V	12.8V	0V

REF.	DESCRIPTION	FUNCTION	①	②	③	④	⑤	⑥	⑦	⑧
IC501	BAM4558F	POWER　50W	1.4V	2.0V	1.8V	0V	2.4V	3.2V	1.4V	7.2V
		POWER　MAX	1.4V	2.0V	2.0V	0V	2.4V	3.5V	1.4V	7.2V
		ANT　OPEN	4.4V	2.1V	2.1V	0V	3.9V	3.1V	5.1V	7.2V

REF.	DESCRIPTION	FUNCTION	①	②	③	④	⑤
IC502	TA75S01F	POWER　50W	3.1V	0V	3.1V	1.8V	7.2V
		POWER　MAX	3.5V	0V	3.5V	3.1V	7.2V
		ANT　OPEN	3.1V	0V	3.1V	1.3V	7.2V

Voltage Chart

2－2　RX UNIT

REF.	DESCRIPTION	FUNCTION	BASE	EMITTER	COLLECTOR
Q104	DTB143EK	RX	3.8V	7.2V	7.1V
		TX	0V	0V	0V
Q113	2SC4250		2.3V	1.5V	4.3V
Q114	DTC314TK	WIDE	0V	0V	7.1V
		NARROW	5.0V	0V	0V
Q117	DTA144EUA	RX	7.2V	7.3V	3.6V
		TX	0V	7.3V	7.3V
Q118	DTB143EK	RX	3.3V	7.3V	7.2V
		TX	7.3V	7.3V	0V
Q119	DTC114EKA	RX	3.9V	0V	0V
		TX	0V	0V	7.3V

REF.	DESCRIPTION	FUNCTION	GATE	DRAIN	SOURCE
Q103	2SK508		0V	1.2V	6.3V
Q115	2SK209	WIDE	7.0V	6.7V	6.7V
		NARROW	0V	6.7V	0.6V
Q116	2SK209	WIDE	7.0V	7.2V	7.2V
		NARROW	0V	7.2V	7.2V
Q120	2SK3018	RX	0V	3.9V	0V
		TX	3.3V	0V	0V

REF.	DESCRIPTION	FUNCTION	①	②	③	④	⑤	⑥	⑦	⑧
IC102	NJU7662M		6.0V	10.9V	7.2V	3.6V	0V	5.9V	10.6V	14.5V

REF.	DESCRIPTION	FUNCTION	①	②	③	④	⑤	⑥	⑦	⑧	⑨	⑩
IC106	TK10487M		7.2V	6.4V	0V	6.7V	7.1V	6.2V	6.2V	6.2V	7.0V	7.1V
			⑪	⑫	⑬	⑭	⑮	⑯	⑰	⑱	⑲	⑳
			2.9V	3.0V	1.3V	1.3V	1.6V	0V	4.9V	0V	0V	1.8V

Voltage Chart

2－3　RX VCO UNIT

REF.	DESCRIPTION	FUNCTION	BASE	EMITTER	COLLECTOR
Q302	2SC4250	RX	2.4V	1.6V	5.3V
		TX	2.4V	1.6V	5.3V
Q303	2SC3583	RX	1.8V	1.2V	6.7V
		TX	0V	0V	7.3V
Q304	DTA124EKA	RX	2.1V	4.9V	4.8V
		TX	2.1V	4.9V	4.8V
Q305	2SD2351	RX	5.5V	4.9V	7.2V
		TX	5.5V	4.9V	7.2V
Q306	DTA124EKA	RX	2.0V	7.2V	7.1V
		TX	7.3V	7.3V	0V

REF.	DESCRIPTION	FUNCTION	GATE	DRAIN	SOURCE
Q301	2SK508	RX	0V	4.7V	1.5V
		TX	0V	4.7V	1.5V

REF.	DESCRIPTION	FUNCTION	①	②	③	④
IC301	μPD1688		3.1V	0V	0.8V	4.8V

Voltage Chart

2－4　TX UNIT

REF.	DESCRIPTION	FUNCTION	BASE	EMITTER	COLLECTOR
Q201	DTC124EKA	RX	0V	0V	7.3V
		TX	3.6V	0V	0V
Q212	2SB1184	TX	11.4V	12.1V	7.2V
Q215	2SC2954	TX	0.6V	0.3V	6.2V

REF.	DESCRIPTION	FUNCTION	①	②	③	④	⑤	⑥	⑦	⑧
IC203	TS272CD		2.5V	2.5V	2.5V	0V	2.5V	2.5V	2.5V	7.3V
IC206	NJU7662M		6.1V	11.0V	7.3V	3.7V	0V	6.0V	10.7V	14.6V
IC209	NJM2904	TX	6.1V	6.1V	7.2V	0V	1.9V	2.4V	0.5V	7.3V
		TX　UNLOCK	0V	0V	0V	0V	4.5V	2.4V	5.8V	7.3V

REF.	DESCRIPTION	FUNCTION	①	②	③	④	⑤
IC204	TA75S01F		2.5V	0V	2.5V	2.5V	7.3V

Voltage Chart

2－5　TX VCO UNIT

REF.	DESCRIPTION	FUNCTION	BASE	EMITTER	COLLECTOR
Q302	2SC4250	RX	0V	0V	7.4V
		TX	2.4V	1.6V	5.3V
Q303	2SC3583	RX	0V	0V	7.3V
		TX	2.0V	1.6V	6.8V
Q304	DTA124EKA	RX	5.0V	5.0V	0V
		TX	2.4V	4.9V	4.9V
Q305	2SD2351	RX	5.0V	5.5V	7.3V
		TX	4.9V	5.5V	7.3V
Q306	DTA124EKA	RX	7.3V	7.3V	0V
		TX	2.1V	7.3V	7.2V

REF.	DESCRIPTION	FUNCTION	GATE	DRAIN	SOURCE
Q301	2SK508	RX	0V	0V	0V
		TX	0V	4.9V	1.7V

REF.	DESCRIPTION	FUNCTION	①	②	③	④
IC301	μPD1688		3.2V	0V	0.9V	4.8V

8 SYSTEM CONFIGURATIONS

8-1 Simplex base station (a coax relay is required)

8-2 Repeater station mode

8-3 Channel combined base and repeater mode

8-4 3 + 1 system with ACU-31 automatic change over unit

8-5 Remote control mode

9. SPECIFICATIONS

9.1 General

Number of Channels	99 channels with name
Channel Spacing	12.5/20/25/30KHz
Operation Mode	Simplex/Semi Duplex/Full Duplex
Antenna Impedance	50 ohm unbalanced
Power Supply	DC 13.6V negative ground only
Consumption	12 amperes or less
Enviromental Conditions	-30 to +60 degree C, 95% humidity @35C
Dimensions	462 (w) 88 (h) 360 (d) mm
Weight	11 kgs.

9.2 Transmitter

Output Power	50W/25W continuous
Switchable Bandwidth	Full sub band
Frequency Deviation	5KHz(wide band) 2.5KHz(narrow band)
Frequency Stability	+/- 1KHz
Frequency Response	Within +1, -3dB, 300-3000Hz @1KHz ref.
Signal to Noise Ratio	50dB or more @1KHz 70% mod. (45dB at narrow)
Modulation Distortion	3% or less
Spurious & Harmonics	0.25uW or less

9.3 Receiver

Switchable Bandwidth	3MHz
IF Frequencies	1st IF 48.4MHz, 2nd IF 455KHz
Frequency Stability	+/- 1KHz
Sensitivity	0.4uV or less for 20dB noise quieting
	0.3uV or less for 12dB SINAD
Squelch Sensitivity	0.25uV or less
Selectivity	70dB or more at 25KHz
Blocking	90dB or more
Intermodulation	70dB or more
Spurious Response	70dB or more
AF Response	Within +1, -3dB, 300-3000Hz @1KHz ref.
AF Distortion	5% or less @1KHz 70% mod
. Signal to Noise Ratio	50dB or more @1KHz 70% mod. (45dB at narrow)

6. CIRCUIT DESCRIPTION

6.1 RECEIVER PART

1) RF section
   An incoming signal is fed to pre-selector (BPF-101), and amplified by Q101, then fed to post-selector (BPF-102). The balanced mixer, consisting of T101, T102, D107 and D108, produces 48.5MHz by injection from the 1st local signal provided by Rx VCO.

2) IF section
   The output signal from the balanced mixer is fed to the crystal filters (XF101), then amplified by Q103. Again, this signal is fed to the 4-pole crystal filters and amplified by Q113. After amplified by Q113, signal is fed to 2nd processor IC (IC106). The 2nd local crystal oscillator signal is fed to IC106 to produce the 2nd local signal (455KHz). IV106 amplifies the 2nd local signal and becomes an audio signal by detector circuit inclusive within the IC106. Then, the audio signal is fed to the low-pass filter inclusive in IC107, and fed to audio processor IC (IC3).

3) VCO section
   The oscillator circuit formed by L303, D303, D305 and Q301 produces the 1st local signal (Rx frequency minus 48.5MHz). The 1st local signal is amplified by buffer amplifier Q302, and again amplified by pre-amplifier IC301m and post amplifier Q303. The amplified signal is fed to the balanced mixer.

4) PLL section
   PLL IC inclusive with pre-scaller IC101 compares the phase between the VCO frequency and reference oscillator frequency (12.00MHz) by method of dividing the frequency, and produces VCO control signal. Then, this control signal is fed to the charge pump, consisting of Q108, Q109 and Q110, and fed to the LPF. The supply voltage of charge pump is multiplied by IC102 (approx. 15V) to achieve greater C/N ratio.

6.2 TRANASMITTER PART

1) VCO section
   The oscillator circuit formed by L303, D305 and D306 generates transmitter frequencies. Then this signal is fed to the 3-stage of amplifiers, buffer amplifier Q302, pre-amplifier IC301 and post amplifier Q303 and lead to the final amplifier.

2) PLL section
   Basically, the circuit description is the same as Rx. PLL IC inclusive with pre-scaller IC205 compares the phase between the VCO signal and reference oscillator frequency (12.00MHz) by method of dividing the frequency, and produces VCO control signal. Then this VCO control signal is fed to the charge pump, consisting of Q206, Q207 and Q208, and fed to the LPF. The supply voltage of charge pump is amplified by IC206 (approx. 15V) to achieve greater C/N ratio.

3) Modulator section
   The modulation signal is fed to both VCO and the reference oscillator (TCVXO), this permits a very flat modulation characteristics against low frequency (DC). This is the advantage when KG510 is used for POCSAG transmitter.

4) Tx younger section
   The VCO signal is amplified by Q215 and Q216 to achieve 250mW.

5) PA section

The signal from younger stage is fed to PM501 and Q501 to achieve 50W output power. Then, signal is fed to the LPF to eliminate the harmonics spurious frequencies. An APC circuit formed by IC502, IC503, Q504 and Q505 stabilizes the output power at the set level. An IC501 protects PM501 and Q501 from the reverse power caused by the unmatched aerials.

6.3 LOGIC PART

1) Microcomputer (CPU) section

A CPU, IC-1, uPD78F005 is the 8-bit processor contained 60K flash memory and 2K RAM inside. This CPU controls all functions of KG510. A flash memory permits ON-BOARD-UP-GRADE when the new software is released.

2) EE ROM section

An IC7 is the 64kbit EEROM. This IC contains all channel parameters

3) Audio processor section

An IC2 is for Tx and an IC3 is for Rx audio processor. These IC's control all audio processing and encode/decode CTCSS tones commanded by CPU. These IC's are also inclusive with 2400bps MODEM to enable to form MPT1327 trunking protocols by using an external MPT control software.

6.4 FRONT CONTROL PANEL PART

1) LCD display section

LCD display is constructed by 128 x 32 dot matrix. This allows to indicate not only characters but also graphics and symbols as you design.

2) LED display section

The 4 LED's are indicating each mode of operation KG510 now works.

3) Audio amplifier section

An IC404 has 2w audio power to drive 8 ohm speaker mounted on the panel

4) Microphone pre-amplifier section

An IC401 is the voice pre-amplifier having –34dBm output to feed Tx modulator.

6-5 REMOTE CONTROL

25 pin D-sub connector for remote control is provided on the rear panel of KG510. The functions of each pins are as follows;

- CH 0
- CH 1
- CH 2
- CH 3
- CH 4
- CH 5
- GROUND
- RSSI
- DISC. OUT
- SQ. CONT.
- BUSY
- MUTE
- MOD-1

 GROUND
 PTT
 MOD-2
 SIMPLEX
 ERROR
 DECODE
 RX AUD-1
21 RX AUD-2
22 TX OUT
23 EXT. POW SW
24 REMOTE
25 +12V

7. ALIGNMENT PROCEDURES

7.1 RECEIVER PART

1) BPF-101 and BPF-102 alignment
Connect the signal generator to the Rx antenna connector of KG510. Align the BPF-101 and BPF-102 to obtain the maximum sensitivity. For better alignment, if you have spectrum analyzer and tracking generator, connect the tracking generator to the Rx antenna connector and pick up the output signal from J101 to connect spectrum analyzer. Align the BPF-101 and BPF-102 to have cover the desired bandwidth of receiving frequencies.

2) FVR101 alignment
This is to adjust the squelch tight level.

3) VCO alignment
The VCO has been aligned at the factory to cover full bandwidth. However, if you need to re-adjust the VCO when you repair, set the VCO voltage at 10.5V by L303 at the highest sub band frequency.

7.2 TRANSMITTER PART

1) FVR201 alignment
This potentiometer determines the modulation level. Carefully align this potentiometer to obtain flat deviation from the lowest to the highest frequency installed n the transmitter.

2) FVR202 alignment
This potentiometer determines the low frequency (below 300Hz) deviation. When POCSAG, CTCSS or DCS are used, necessary to align to have enough deviation at low frequency.

3) FVR203 alignment
This potentiometer sets the maximum deviation, normally set at 5KHz. 2KHz or 2.5KHz deviation for narrow spacing can be set by programming software.

4) FVR204 alignment
This is to adjust the transmitter output power.

5) VCO alignment
The VCO has already been aligned at the factory, however if you need to re-adjust, set the VCO voltage at 10.5V at the highest sub band frequency.

7.3 POWER AMPLIFIER PART

1) FVC503
   This variable capacitor to be adjusted to gain the maximum efficiency as well as the maximum power output at the final transistor of the power amplifier.

2) FVR501
   This potentiometer to be adjusted at the minimum reverse power detecting point when the antenna is terminated with 50 ohms load.

3) FVR502
   This potentiometer to be set at the point where reverse power is detected.

4) FVR503
   This potentiometer to be set at the point where low-power-alarm is detected.

5) FVR504
   This potentiometer to be set at the maximum power from the power module, however, do not adjust exceeding 70 watts.

7.4 LOGIC PART

1) FVR1 alignment
   This potentiometer is to obtain 600 ohm 0dBm output of the RF signal.

2) FVR2 alignment
   This is to set the deviation level when KG510 is used for a repeater.

3) FVR3 alignment
   This is to set the Tx output power level indicating on the LCD.

4) FVC1 alignment
   This is to shift the CPU clock frequency when necessary. A beat interference sometimes happens at certain frequency. In such case, shifting the CPU clock frequency may eliminate the interference.

7.5 FRONT CONTROL PANEL PART

1) VR401 alignment
   This is a volume controller.

2) VR402 alignment
   This is a squelch level controller.

3) FVR401 alignment
   This is to set the HI-POWER-LEVEL of the Tx output power.

4) FVR402 alignment
   This is to set the LO-POWER=LEVEL of the Tx output power.

5) FVR403 alignment
   This is to set the contrast of the LCD back light.

7.6 Voltage Chart

Voltage Chart

1□ 1 LOGIC UNIT

REF.	DESCRIPTION	FUNCTION	GATE	DRAIN	SOURCE
Q2	2SK209	SQ OPEN	3.5V	3.0V	3.0V
		SQ TIGHT	0V	3.0V	0.5V
Q3	2SK209	SQ OPEN	3.5V	3.0V	3.0V
		SQ TIGHT	0V	3.0V	0.5V
Q4	2SK209	BASE	0V	2.5V	0.5V
		REPET	3.0V	2.5V	2.5V
Q5	2SK2731	BASE	0V	0V	0V
		REPET	0V	3.7V	0V

REF.	DESCRIPTION	FUNCTION	‡ @	‡ A	‡ B	‡ C	‡ D
IC10	TA75S01F	RX	0V	0V	0.5V	0V	4.9V
		TX	1.0V	0V	0.5V	3.7V	4.9V
IC11	BU4S81	BASE	4.9V	4.9V	0V	4.9V	5.0V
		REPET	0V	0V	0V	0V	5.0V
IC12	BU4S01	BASE	4.9V	4.9V	0V	4.9V	5.0V
		REPET	0V	0V	0V	4.8V	5.0V
IC15	BU4S81	SQ OPEN	4.9V	4.9V	0V	4.9V	5.0V
		SQ TIGHT	0V	0V	0V	0V	5.0V

REF.	DESCRIPTION	FUNCTION	‡ @	‡ A	‡ B	‡ C
IC14A	TS272CD		3.0V	3.0V	3.0V	0V

REF.	DESCRIPTION	FUNCTION	‡ D	‡ E	‡ F	‡ G
IC14B	TS272CD	SQ OPEN	1.1V	1.1V	1.1V	12.0V
		SQ TIGHT	0V	0V	0V	12.0V

REF.	DESCRIPTION	FUNCTION	‡ @	‡ A	‡ B	‡ C	‡ D	‡ E	‡ F	‡ G
IC16	NJM2073		5.8V	12.0V	5.8V	0V	0.5V	0V	0V	0.5V

Voltage Chart

1□ 2 FRONT UNIT

REF.	DESCRIPTION	FUNCTION	BASE	EMITTER	COLLECTOR
Q410	2SA1431		6.9V	6.3V	12.0V

REF.	DESCRIPTION	FUNCTION	‡ @	‡ A	‡ B	‡ C	‡ D
IC401	TA75S558F		2.9V	0V	2.9V	2.9V	5.0V
IC404	LA4425A		1.4V	0V	0V	5.8V	12.5V

REF.	DESCRIPTION	FUNCTION	‡ @	‡ A	‡ B	‡ C	‡ D	‡ E	‡ F	‡ G
IC406	NJU7662M		5.3V	6.1V	0V	□ 6.0V	□ 12.0V	5.2V	7.9V	12.1V

Voltage Chart

3□1 PA UNIT

REF.	DESCRIPTION	FUNCTION	BASE	EMITTER	COLLECTOR
Q502	DTC124EKA	TX OFF	0V	0V	12.7V
		TX ON	2.2V	0V	0V
Q503	DTB143EK	TX OFF	12.9V	13.2V	0V
		TX ON	8.4V	12.8V	12.8V
Q504	2SC2412K	POWER 50W	1.7V	1.0V	1.4V
		POWER MAX	1.9V	1.2V	1.3V
Q505	2SB1018A	POWER 50W	12.2V	12.8V	12.8V
		POWER MAX	12.0V	12.7V	12.7V
Q506	2SD2352	POWER 50W	11.6V	12.8V	10.9V
		POWER MAX	12.6V	12.2V	12.8V

REF.	DESCRIPTION	FUNCTION	GATE	DRAIN	SOURCE
Q507	2SK2731	TX OFF	3.6V	0V	0V
		TX ON	0V	12.8V	0V

REF.	DESCRIPTION	FUNCTION	‡ @	‡ A	‡ B	‡ C	‡ D	‡ E	‡ F	‡ G
IC501	BAM4558F	POWER 50W	1.5V	1.9V	1.8V	0V	2.3V	2.9V	1.5V	7.2V
		POWER MAX	3.0V	1.9V	1.9V	0V	2.3V	3.1V	1.5V	7.2V
		ANT OPEN	4.0V	2.0V	2.0V	0V	3.6V	2.8V	5.1V	7.2V

REF.	DESCRIPTION	FUNCTION	‡ @	‡ A	‡ B	‡ C	‡ D
IC502	TA75S01F	POWER 50W	2.9V	0V	3.1V	2.1V	7.2V
		POWER MAX	4.0V	0V	3.3V	6.2V	7.2V
		ANT OPEN	2.7V	0V	2.7V	1.4V	7.2V

Voltage Chart

3□3 RX VCO UNIT

REF.	DESCRIPTION	FUNCTION	BASE	EMITTER	COLLECTOR
Q302	2SC4325	RX	2.3V	1.6V	5.3V
		TX	2.4V	1.8V	5.5V
Q303	2SC3583	RX	2.0V	1.4V	6.7V
		TX	0V	0V	7.4V
Q304	DTA124EKA	RX	2.1V	4.9V	4.8V
		TX	2.3V	5.0V	5.0V
Q305	2SD2351	RX	5.5V	4.9V	7.2V
		TX	5.5V	5.0V	7.4V
Q306	DTA124EKA	RX	2.0V	7.2V	7.0V
		TX	7.4V	7.4V	0V

REF.	DESCRIPTION	FUNCTION	GATE	DRAIN	SOURCE
Q301	2SK508	RX	0V	4.6V	1.4V
		TX	0V	4.7V	1.5V

REF.	DESCRIPTION	FUNCTION	‡ @	‡ A	‡ B	‡ C
IC301	ƒ ÊD1688		3.1V	0V	0.9V	4.9V

Voltage Chart

3□4 TX UNIT

REF.	DESCRIPTION	FUNCTION	BASE	EMITTER	COLLECTOR
Q201	DTC124EKA	RX	0V	0V	7.3V
		TX	3.8V	0V	0V
Q212	2SB1184	TX	11.5V	12.1V	6.8V
Q215	2SC3357	TX	0.7V	0.3V	5.8V
Q216	2SC2131	TX	0.6V	0V	5.3V

REF.	DESCRIPTION	FUNCTION	‡@	‡A	‡B	‡C	‡D	‡E	‡F	‡G
IC203	TS272CD		2.7V	2.7V	2.7V	0V	2.7V	2.7V	2.7V	7.5V
IC206	NJU7662M		6.2V	11.1V	7.4V	3.8V	0V	6.2V	11.3V	14.7V
IC209	NJM2904	TX	6.3V	6.3V	7.3V	0V	1.8V	2.5V	0.5V	7.5V
		TX UNLOCK	0V	0V	0V	0V	4.5V	2.4V	5.8V	7.3V

REF.	DESCRIPTION	FUNCTION	‡@	‡A	‡B	‡C	‡D
IC204	TA75S01F		2.7V	0V	2.7V	2.7V	7.5V

Voltage Chart

3□5 TX VCO UNIT

REF.	DESCRIPTION	FUNCTION	BASE	EMITTER	COLLECTOR
Q302	2SC4250	RX	0V	0V	7.3V
		TX	2.3V	1.6V	5.6V
Q303	2SC3583	RX	0V	0V	7.3V
		TX	2.2V	1.5V	7.0V
Q304	DTA124EKA	RX	5.2V	5.2V	0V
		TX	2.5V	5.0V	5.0V
Q305	2SD2351	RX	5.5V	5.2V	7.3V
		TX	5.6V	5.0V	7.5V
Q306	DTA124EKA	RX	7.3V	7.3V	0V
		TX	2.3V	7.4V	7.3V

REF.	DESCRIPTION	FUNCTION	GATE	DRAIN	SOURCE
Q301	2SK508	RX	0V	0V	0V
		TX	0V	4.6V	1.4V

REF.	DESCRIPTION	FUNCTION	‡@	‡A	‡B	‡C
IC301	μPD1688		3.4V	0V	0.9V	5.1V

8 SYSTEM CONFIGURATIONS

8-1 Simplex base station (a coax relay is required)
8-2 Repeater station mode
8-3 Channel combined base and repeater mode
8-4 3 + 1 system with ACU-31 automatic change over unit
8-5 Remote control mode

9. SPECIFICATIONS

9.1 General

Frequency Range	Version SA 300 - 335MHz
	Version A 335 - 370MHz
	Version B 365 - 400MHz
	Version C 400 - 435MHz
	Version DS 420 - 455MHz
	Version D 440 - 475MHz
	Version E 465 - 500MHz
	Version F 485 - 520MHz
Number of Channels	99 channels with name
Channel Spacing	12.5/20/25/30KHz
Operation Mode	Simplex/Semi Duplex/Full Duplex
Antenna Impedance	50 ohm unbalanced
Power Supply	DC 13.6V negative ground only
Consumption	12 amperes or less
Enviromental Conditions	-30 to +60 degree C, 95% humidity @35C
Dimensions	462 (w) 88 (h) 360 (d) mm
Weight	11 kgs.

9.2 Transmitter

Output Power	50W/25W continuous
Switchable Bandwidth	Full sub band
Frequency Deviation	5KHz(wide band) 2.5KHz(narrow band)
Frequency Stability	+/- 1KHz
Frequency Response	Within +1, -3dB, 300-3000Hz @1KHz ref.
Signal to Noise Ratio	50dB or more @1KHz 70% mod. (45dB at narrow)
Modulation Distortion	3% or less
Spurious & Harmonics	0.25uW or less

9.3 Receiver

Switchable Bandwidth	4MHz
IF Frequencies	1st IF 48.4MHz, 2nd IF 455KHz
Frequency Stability	+/- 1KHz
Sensitivity	0.4uV or less for 20dB N.Q. / 0.3uV for 12dB SINAD
Squelch Sensitivity	0.25uV or less
Selectivity	70dB or more at 25KHz
Blocking	90dB or more
Intermodulation	70dB or more
Spurious Response	70dB or more
AF Response	Within +1, -3dB, 300-3000Hz @1KHz ref.
AF Distortion	5% or less @1KHz 70% mod
. Signal to Noise Ratio	50dB or more @1KHz 70% mod. (45dB at narrow)

PROGRAMMING MANUAL

KYODO KG510 BASE/REPEATER

6. CIRCUIT DESCRIPTION

6.1 RECEIVER PART

1) RF section
   An incoming signal is fed to pre-selector (BPF-101), and amplified by Q101, then fed to post-selector (BPF-102). The balanced mixer, consisting of T101, T102, D107 and D108, produces 48.5MHz by injection from the 1st local signal provided by Rx VCO.

2) IF section
   The output signal from the balanced mixer is fed to the crystal filters (XF101), then amplified by Q103. Again, this signal is fed to the 4-pole crystal filters and amplified by Q113. After amplified by Q113, signal is fed to 2nd processor IC (IC106). The 2nd local crystal oscillator signal is fed to IC106 to produce the 2nd local signal (455KHz). IV106 amplifies the 2nd local signal and becomes an audio signal by detector circuit inclusive within the IC106. Then, the audio signal is fed to the low-pass filter inclusive in IC107, and fed to audio processor IC (IC3).

3) VCO section
   The oscillator circuit formed by L303, D303, D305 and Q301 produces the 1st local signal (Rx frequency minus 48.5MHz). The 1st local signal is amplified by buffer amplifier Q302, and again amplified by pre-amplifier IC301m and post amplifier Q303. The amplified signal is fed to the balanced mixer.

4) PLL section
   PLL IC inclusive with pre-scaller IC101 compares the phase between the VCO frequency and reference oscillator frequency (12.00MHz) by method of dividing the frequency, and produces VCO control signal. Then, this control signal is fed to the charge pump, consisting of Q108, Q109 and Q110, and fed to the LPF. The supply voltage of charge pump is multiplied by IC102 (approx. 15V) to achieve greater C/N ratio.

6.2 TRANASMITTER PART

1) VCO section
   The oscillator circuit formed by L303, D305 and D306 generates transmitter frequencies. Then this signal is fed to the 3-stage of amplifiers, buffer amplifier Q302, pre-amplifier IC301 and post amplifier Q303 and lead to the final amplifier.

2) PLL section
   Basically, the circuit description is the same as Rx. PLL IC inclusive with pre-scaller IC205 compares the phase between the VCO signal and reference oscillator frequency (12.00MHz) by method of dividing the frequency, and produces VCO control signal. Then this VCO control signal is fed to the charge pump, consisting of Q206, Q207 and Q208, and fed to the LPF. The supply voltage of charge pump is amplified by IC206 (approx. 15V) to achieve greater C/N ratio.

3) Modulator section
   The modulation signal is fed to both VCO and the reference oscillator (TCVXO), this permits a very flat modulation characteristics against low frequency (DC). This is the advantage when KG510 is used for POCSAG transmitter.

4) Tx younger section
   The VCO signal is amplified by Q215 and Q216 to achieve 250mW.

5) PA section

The signal from younger stage is fed to PM501 and Q501 to achieve 50W output power. Then, signal is fed to the LPF to eliminate the harmonics spurious frequencies. An APC circuit formed by IC502, IC503, Q504 and Q505 stabilizes the output power at the set level. An IC501 protects PM501 and Q501 from the reverse power caused by the unmatched aerials.

6.3 LOGIC PART

1) Microcomputer (CPU) section

A CPU, IC-1, uPD78F005 is the 8-bit processor contained 60K flash memory and 2K RAM inside. This CPU controls all functions of KG510. A flash memory permits ON-BOARD-UP-GRADE when the new software is released.

2) EE ROM section

An IC7 is the 64kbit EEROM. This IC contains all channel parameters

3) Audio processor section

An IC2 is for Tx and an IC3 is for Rx audio processor. These IC's control all audio processing and encode/decode CTCSS tones commanded by CPU. These IC's are also inclusive with 2400bps MODEM to enable to form MPT1327 trunking protocols by using an external MPT control software.

6.4 FRONT CONTROL PANEL PART

1) LCD display section

LCD display is constructed by 128 x 32 dot matrix. This allows to indicate not only characters but also graphics and symbols as you design.

2) LED display section

The 4 LED's are indicating each mode of operation KG510 now works.

3) Audio amplifier section

An IC404 has 2w audio power to drive 8 ohm speaker mounted on the panel

4) Microphone pre-amplifier section

An IC401 is the voice pre-amplifier having –34dBm output to feed Tx modulator.

6-5 REMOTE CONTROL

25 pin D-sub connector for remote control is provided on the rear panel of KG510. The functions of each pins are as follows;

- CH 0
- CH 1
- CH 2
- CH 3
- CH 4
- CH 5
- GROUND
- RSSI
- DISC. OUT
- SQ. CONT.
- BUSY
- MUTE
- MOD-1

 GROUND
 PTT
 MOD-2
 SIMPLEX
 ERROR
 DECODE
 RX AUD-1
21 RX AUD-2
22 TX OUT
23 EXT. POW SW
24 REMOTE
25 +12V

7. ALIGNMENT PROCEDURES

7.1 RECEIVER PART

1) BPF-101 and BPF-102 alignment
Connect the signal generator to the Rx antenna connector of KG510. Align the BPF-101 and BPF-102 to obtain the maximum sensitivity. For better alignment, if you have spectrum analyzer and tracking generator, connect the tracking generator to the Rx antenna connector and pick up the output signal from J101 to connect spectrum analyzer. Align the BPF-101 and BPF-102 to have cover the desired bandwidth of receiving frequencies.

2) FVR101 alignment
This is to adjust the squelch tight level.

3) VCO alignment
The VCO has been aligned at the factory to cover full bandwidth. However, if you need to re-adjust the VCO when you repair, set the VCO voltage at 10.5V by L303 at the highest sub band frequency.

7.2 TRANSMITTER PART

1) FVR201 alignment
This potentiometer determines the modulation level. Carefully align this potentiometer to obtain flat deviation from the lowest to the highest frequency installed n the transmitter.

2) FVR202 alignment
This potentiometer determines the low frequency (below 300Hz) deviation. When POCSAG, CTCSS or DCS are used, necessary to align to have enough deviation at low frequency.

3) FVR203 alignment
This potentiometer sets the maximum deviation, normally set at 5KHz. 2KHz or 2.5KHz deviation for narrow spacing can be set by programming software.

4) FVR204 alignment
This is to adjust the transmitter output power.

5) VCO alignment
The VCO has already been aligned at the factory, however if you need to re-adjust, set the VCO voltage at 10.5V at the highest sub band frequency.

7.3 POWER AMPLIFIER PART

1) FVC503
   This variable capacitor to be adjusted to gain the maximum efficiency as well as the maximum power output at the final transistor of the power amplifier.

2) FVR501
   This potentiometer to be adjusted at the minimum reverse power detecting point when the antenna is terminated with 50 ohms load.

3) FVR502
   This potentiometer to be set at the point where reverse power is detected.

4) FVR503
   This potentiometer to be set at the point where low-power-alarm is detected.

5) FVR504
   This potentiometer to be set at the maximum power from the power module, however, do not adjust exceeding 70 watts.

7.4 LOGIC PART

1) FVR1 alignment
   This potentiometer is to obtain 600 ohm 0dBm output of the RF signal.

2) FVR2 alignment
   This is to set the deviation level when KG510 is used for a repeater.

3) FVR3 alignment
   This is to set the Tx output power level indicating on the LCD.

4) FVC1 alignment
   This is to shift the CPU clock frequency when necessary. A beat interference sometimes happens at certain frequency. In such case, shifting the CPU clock frequency may eliminate the interference.

7.5 FRONT CONTROL PANEL PART

1) VR401 alignment
   This is a volume controller.

2) VR402 alignment
   This is a squelch level controller.

3) FVR401 alignment
   This is to set the HI-POWER-LEVEL of the Tx output power.

4) FVR402 alignment
   This is to set the LO-POWER=LEVEL of the Tx output power.

5) FVR403 alignment
   This is to set the contrast of the LCD back light.

7.6 Voltage Chart

Voltage Chart

1□ 1 LOGIC UNIT

REF.	DESCRIPTION	FUNCTION	GATE	DRAIN	SOURCE
Q2	2SK209	SQ OPEN	3.5V	3.0V	3.0V
		SQ TIGHT	0V	3.0V	0.5V
Q3	2SK209	SQ OPEN	3.5V	3.0V	3.0V
		SQ TIGHT	0V	3.0V	0.5V
Q4	2SK209	BASE	0V	2.5V	0.5V
		REPET	3.0V	2.5V	2.5V
Q5	2SK2731	BASE	0V	0V	0V
		REPET	0V	3.7V	0V

REF.	DESCRIPTION	FUNCTION	‡ @	‡ A	‡ B	‡ C	‡ D
IC10	TA75S01F	RX	0V	0V	0.5V	0V	4.9V
		TX	1.0V	0V	0.5V	3.7V	4.9V
IC11	BU4S81	BASE	4.9V	4.9V	0V	4.9V	5.0V
		REPET	0V	0V	0V	0V	5.0V
IC12	BU4S01	BASE	4.9V	4.9V	0V	4.9V	5.0V
		REPET	0V	0V	0V	4.8V	5.0V
IC15	BU4S81	SQ OPEN	4.9V	4.9V	0V	4.9V	5.0V
		SQ TIGHT	0V	0V	0V	0V	5.0V

REF.	DESCRIPTION	FUNCTION	‡ @	‡ A	‡ B	‡ C
IC14A	TS272CD		3.0V	3.0V	3.0V	0V

REF.	DESCRIPTION	FUNCTION	‡ D	‡ E	‡ F	‡ G
IC14B	TS272CD	SQ OPEN	1.1V	1.1V	1.1V	12.0V
		SQ TIGHT	0V	0V	0V	12.0V

REF.	DESCRIPTION	FUNCTION	‡ @	‡ A	‡ B	‡ C	‡ D	‡ E	‡ F	‡ G
IC16	NJM2073		5.8V	12.0V	5.8V	0V	0.5V	0V	0V	0.5V

Voltage Chart

1□ 2 FRONT UNIT

REF.	DESCRIPTION	FUNCTION	BASE	EMITTER	COLLECTOR
Q410	2SA1431		6.9V	6.3V	12.0V

REF.	DESCRIPTION	FUNCTION	‡ @	‡ A	‡ B	‡ C	‡ D
IC401	TA75S558F		2.9V	0V	2.9V	2.9V	5.0V
IC404	LA4425A		1.4V	0V	0V	5.8V	12.5V

REF.	DESCRIPTION	FUNCTION	‡ @	‡ A	‡ B	‡ C	‡ D	‡ E	‡ F	‡ G
IC406	NJU7662M		5.3V	6.1V	0V	□ 6.0V	□ 12.0V	5.2V	7.9V	12.1V

Voltage Chart

3□1 PA UNIT

REF.	DESCRIPTION	FUNCTION	BASE	EMITTER	COLLECTOR
Q502	DTC124EKA	TX OFF	0V	0V	12.7V
		TX ON	2.2V	0V	0V
Q503	DTB143EK	TX OFF	12.9V	13.2V	0V
		TX ON	8.4V	12.8V	12.8V
Q504	2SC2412K	POWER 50W	1.7V	1.0V	1.4V
		POWER MAX	1.9V	1.2V	1.3V
Q505	2SB1018A	POWER 50W	12.2V	12.8V	12.8V
		POWER MAX	12.0V	12.7V	12.7V
Q506	2SD2352	POWER 50W	11.6V	12.8V	10.9V
		POWER MAX	12.6V	12.2V	12.8V

REF.	DESCRIPTION	FUNCTION	GATE	DRAIN	SOURCE
Q507	2SK2731	TX OFF	3.6V	0V	0V
		TX ON	0V	12.8V	0V

REF.	DESCRIPTION	FUNCTION	‡ @	‡ A	‡ B	‡ C	‡ D	‡ E	‡ F	‡ G
IC501	BAM4558F	POWER 50W	1.5V	1.9V	1.8V	0V	2.3V	2.9V	1.5V	7.2V
		POWER MAX	3.0V	1.9V	1.9V	0V	2.3V	3.1V	1.5V	7.2V
		ANT OPEN	4.0V	2.0V	2.0V	0V	3.6V	2.8V	5.1V	7.2V

REF.	DESCRIPTION	FUNCTION	‡ @	‡ A	‡ B	‡ C	‡ D
IC502	TA75S01F	POWER 50W	2.9V	0V	3.1V	2.1V	7.2V
		POWER MAX	4.0V	0V	3.3V	6.2V	7.2V
		ANT OPEN	2.7V	0V	2.7V	1.4V	7.2V

Voltage Chart

3□3 RX VCO UNIT

REF.	DESCRIPTION	FUNCTION	BASE	EMITTER	COLLECTOR
Q302	2SC4325	RX	2.3V	1.6V	5.3V
		TX	2.4V	1.8V	5.5V
Q303	2SC3583	RX	2.0V	1.4V	6.7V
		TX	0V	0V	7.4V
Q304	DTA124EKA	RX	2.1V	4.9V	4.8V
		TX	2.3V	5.0V	5.0V
Q305	2SD2351	RX	5.5V	4.9V	7.2V
		TX	5.5V	5.0V	7.4V
Q306	DTA124EKA	RX	2.0V	7.2V	7.0V
		TX	7.4V	7.4V	0V

REF.	DESCRIPTION	FUNCTION	GATE	DRAIN	SOURCE
Q301	2SK508	RX	0V	4.6V	1.4V
		TX	0V	4.7V	1.5V

REF.	DESCRIPTION	FUNCTION	‡ @	‡ A	‡ B	‡ C
IC301	ƒ ÊD1688		3.1V	0V	0.9V	4.9V

Voltage Chart

3□4 TX UNIT

REF.	DESCRIPTION	FUNCTION	BASE	EMITTER	COLLECTOR
Q201	DTC124EKA	RX	0V	0V	7.3V
		TX	3.8V	0V	0V
Q212	2SB1184	TX	11.5V	12.1V	6.8V
Q215	2SC3357	TX	0.7V	0.3V	5.8V
Q216	2SC2131	TX	0.6V	0V	5.3V

REF.	DESCRIPTION	FUNCTION	‡@	‡A	‡B	‡C	‡D	‡E	‡F	‡G
IC203	TS272CD		2.7V	2.7V	2.7V	0V	2.7V	2.7V	2.7V	7.5V
IC206	NJU7662M		6.2V	11.1V	7.4V	3.8V	0V	6.2V	11.3V	14.7V
IC209	NJM2904	TX	6.3V	6.3V	7.3V	0V	1.8V	2.5V	0.5V	7.5V
		TX UNLOCK	0V	0V	0V	0V	4.5V	2.4V	5.8V	7.3V

REF.	DESCRIPTION	FUNCTION	‡@	‡A	‡B	‡C	‡D
IC204	TA75S01F		2.7V	0V	2.7V	2.7V	7.5V

Voltage Chart

3□5 TX VCO UNIT

REF.	DESCRIPTION	FUNCTION	BASE	EMITTER	COLLECTOR
Q302	2SC4250	RX	0V	0V	7.3V
		TX	2.3V	1.6V	5.6V
Q303	2SC3583	RX	0V	0V	7.3V
		TX	2.2V	1.5V	7.0V
Q304	DTA124EKA	RX	5.2V	5.2V	0V
		TX	2.5V	5.0V	5.0V
Q305	2SD2351	RX	5.5V	5.2V	7.3V
		TX	5.6V	5.0V	7.5V
Q306	DTA124EKA	RX	7.3V	7.3V	0V
		TX	2.3V	7.4V	7.3V

REF.	DESCRIPTION	FUNCTION	GATE	DRAIN	SOURCE
Q301	2SK508	RX	0V	0V	0V
		TX	0V	4.6V	1.4V

REF.	DESCRIPTION	FUNCTION	‡@	‡A	‡B	‡C
IC301	μPD1688		3.4V	0V	0.9V	5.1V

8 SYSTEM CONFIGURATIONS

8-1 Simplex base station (a coax relay is required)
8-2 Repeater station mode
8-3 Channel combined base and repeater mode
8-4 3 + 1 system with ACU-31 automatic change over unit
8-5 Remote control mode

9. SPECIFICATIONS

9.1 General

Frequency Range	Version SA 300 - 335MHz
	Version A 335 - 370MHz
	Version B 365 - 400MHz
	Version C 400 - 435MHz
	Version DS 420 - 455MHz
	Version D 440 - 475MHz
	Version E 465 - 500MHz
	Version F 485 - 520MHz
Number of Channels	99 channels with name
Channel Spacing	12.5/20/25/30KHz
Operation Mode	Simplex/Semi Duplex/Full Duplex
Antenna Impedance	50 ohm unbalanced
Power Supply	DC 13.6V negative ground only
Consumption	12 amperes or less
Enviromental Conditions	-30 to +60 degree C, 95% humidity @35C
Dimensions	462 (w) 88 (h) 360 (d) mm
Weight	11 kgs.

9.2 Transmitter

Output Power	50W/25W continuous
Switchable Bandwidth	Full sub band
Frequency Deviation	5KHz(wide band) 2.5KHz(narrow band)
Frequency Stability	+/- 1KHz
Frequency Response	Within +1, -3dB, 300-3000Hz @1KHz ref.
Signal to Noise Ratio	50dB or more @1KHz 70% mod. (45dB at narrow)
Modulation Distortion	3% or less
Spurious & Harmonics	0.25uW or less

9.3 Receiver

Switchable Bandwidth	4MHz
IF Frequencies	1st IF 48.4MHz, 2nd IF 455KHz
Frequency Stability	+/- 1KHz
Sensitivity	0.4uV or less for 20dB N.Q. / 0.3uV for 12dB SINAD
Squelch Sensitivity	0.25uV or less
Selectivity	70dB or more at 25KHz
Blocking	90dB or more
Intermodulation	70dB or more
Spurious Response	70dB or more
AF Response	Within +1, -3dB, 300-3000Hz @1KHz ref.
AF Distortion	5% or less @1KHz 70% mod
. Signal to Noise Ratio	50dB or more @1KHz 70% mod. (45dB at narrow)

PROGRAMMING SOFTWARE

The **Kyodo w-kgprg Programming Software** is required to program Kyodo KG510 base/repeater.

SYSTEM REQUIREMENTS

Computer:	IBM PC or compatible with a Pentium or better microprocessor.
Monitor:	XGA(1024 X 768dot) or better recommended.
Operating System:	window95/98/ME/2000/NT/XP
Peripheral Equipment:	Programming Cable to suit the applicable radio, and Printer.

SOFTWARE OUTLINE

Serial transmission is at the rate of 9,600 bps. This data can be displayed on the screen, saved to a file, or printed on a printer.

PROGRAMMING SETUP

Connect the Programming Cable to the 9 way Programming Connector on the rear of the KG510.
Connect the other end to the COM1 or COM2 port on the computer.

SOFTWARE INSTALLATION

The Kyodo program CD-ROM disk should contain the following file:

w-kgprg.cab
setup.exe
SETUP.LST

1. Insert the CD into the CD-ROM Drive.
2. If AutoOpen is not enabled, from the Start Menu select Run and type D:\Setup.exe, where D is the drive letter that the installation CD is in.
3. Follow the instructions on the screen to install the software.

A. OPENING SCREEN

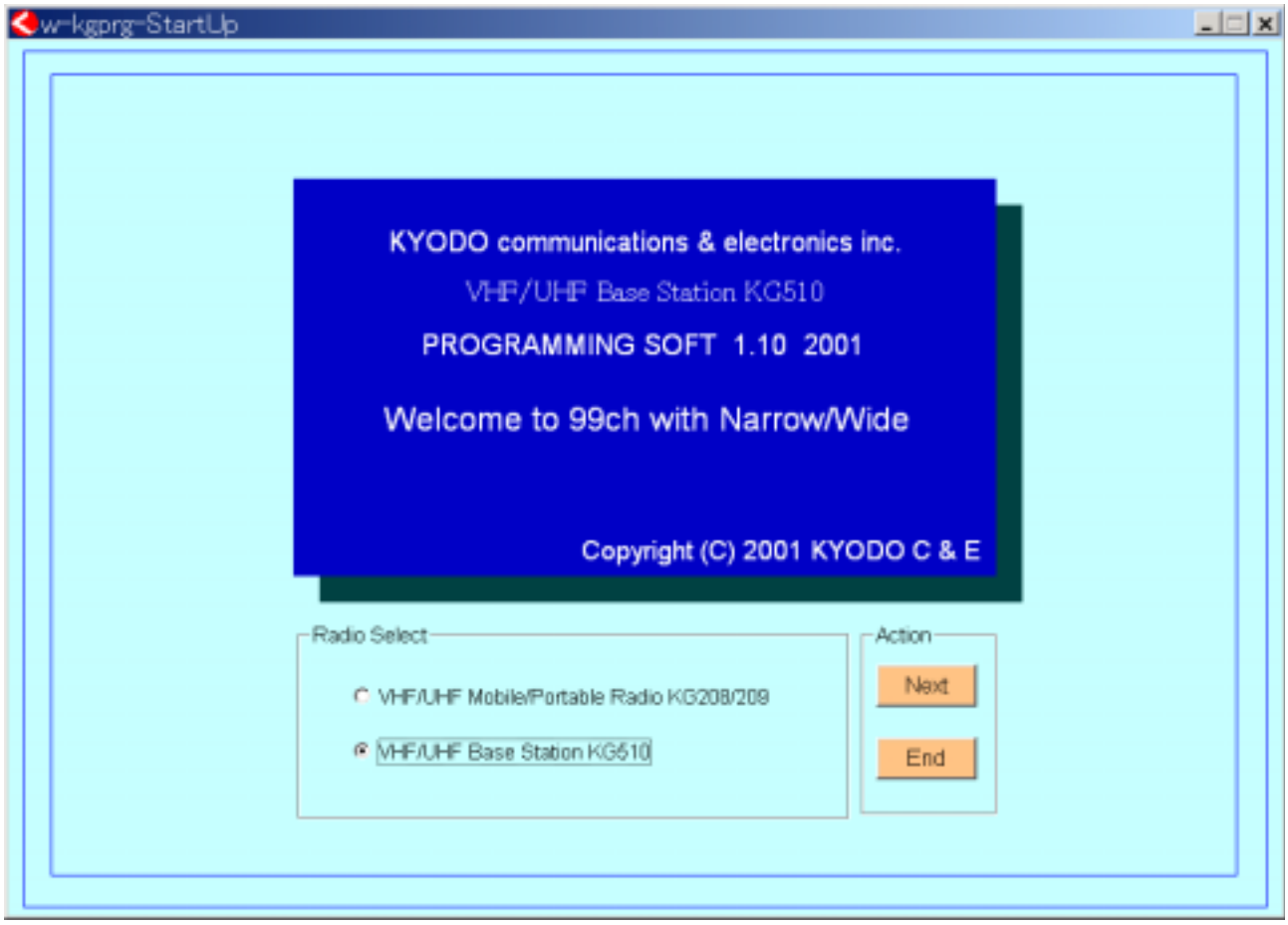

To run the program choose Start, Program, Kyodo, w-kgprg from the start menu.

From the opening screen, click the ***Next*** button.

B. CONFIGURATION MENU

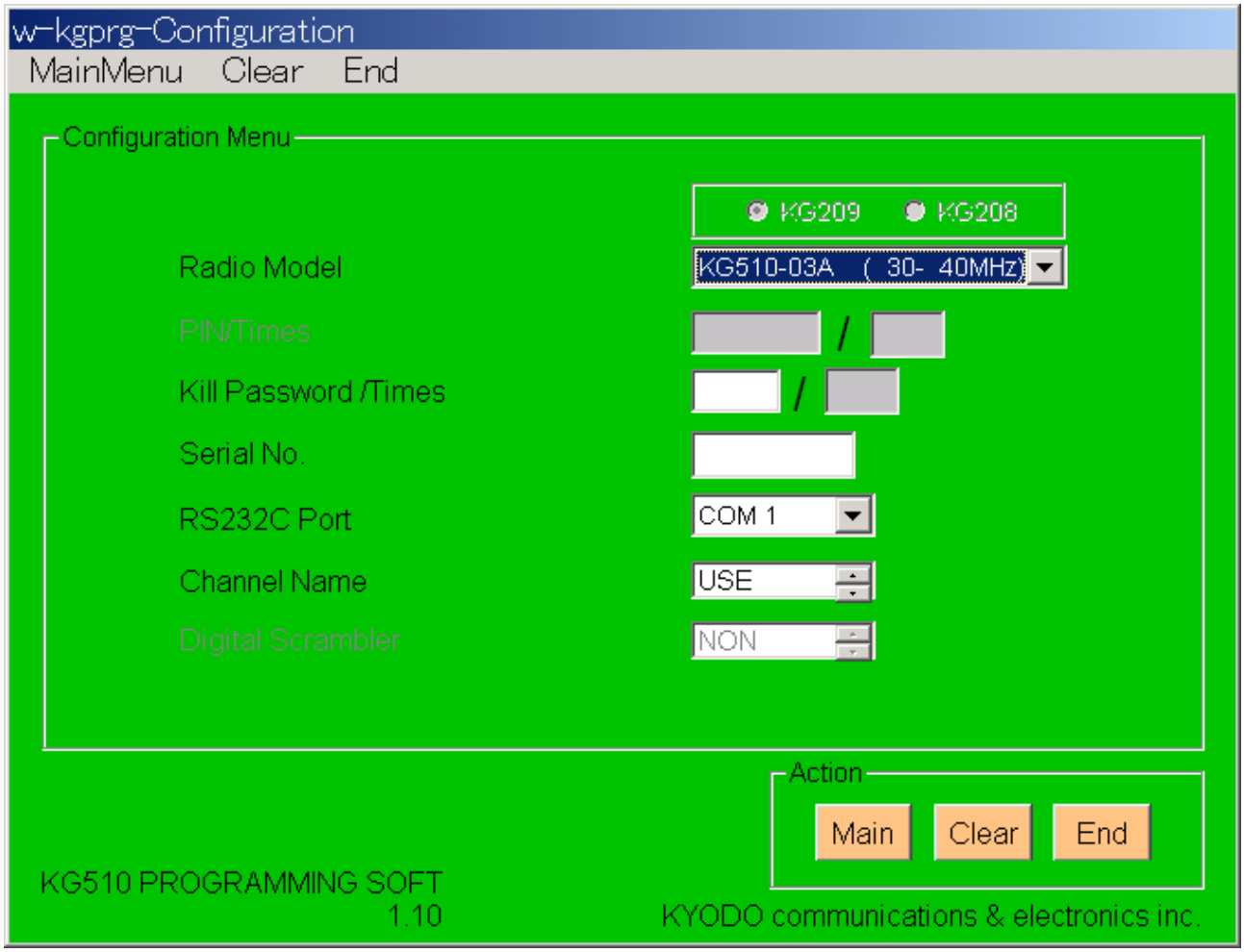

The screen above is displayed when you execute the w-kgprg.exe command and click ***Next*** will display the ***Configuration Menu*** screen.

1. Radio Model
   Firstly, select ***Radio Model***. Choose the frequency band or full model # of the radio being programmed by selecting the correct radio model from the drop-down ***Model Menu***.

2. Kill Password/Times
   The **Kill Password** function is provided as an additional security feature to prevent unauthorised or prank users from transmitting the Kill data and disabling radios within a radio fleet. (This facility will NOT prevent outside parties transmitting the Kill data on the users frequency and disabling the users radios). With the Kill Password facility enabled, a user must enter the valid Password before the radio will transmit the Kill data.
   The Kill Password MUST be a 4 digit numeric password.
   If a number is entered into the Times part of this field, then the user will have that number of tries to enter the correct password into the radio. Failure to do so will result in the radio entering the Killed state, and the radio will no longer be useable.

   The user must use the [SHIFT] + [6] keys to enter the password.

   NOTE: In the case of radios using DTMF tone signalling, the decoding number and the Kill number MUST be more than 4 digits.

3. Serial No.
The radio serial number can be entered by selecting ***Serial No*** from the ***Configuration Menu***. The radio Serial No. will then be printed in the header line of the page whenever the programming data is printed.

4. RS232C Port
Selecting ***RS232C Port*** from the ***Configuration Menu*** is used to select the PC port to use to connect the programming cable from the computer to the radio.

Port1 = COM1
Port2 = COM2

Select the required computer port in the ***RS232C Port*** field.

5. Channel Name
If you wish to use the channel naming function with the radio, select ***Channel Name*** from the ***Configuration Menu***.
"NON" indicates that the Channel Naming facility is NOT required.
"USE" indicates that you wish to use this facility to display individual channel names for each channel when the radio is in field use. (Please Note: The required Channel Names are entered by selecting the ***Channel Name*** field from the ***Main Menu*** screen).
When in use, the radio will display the current channel name in the LCD display after displaying the channel number.
For example, assuming that you named Ch#2 as "POLICE".
Immediately after changing to channel #2, the LCD display will indicate the channel number "2" and then display the channel name "POLICE".

A channel name must be 8 characters or less. You may only use the following characters in the channel name:

0-9, A-Z, a-z, / + - * # ! S % ( ) = [ ] < > ? and space

6. Main
Go to ***Main Menu***

7. Clear
Clear the current programming data that has been entered into the Computer memory. You have two choices:
(a) ***Channel Data Initialize*** will clear **only** the channel data.
(b) ***All Data Initialize*** will clear **all** the data that has been entered into the Computer.

X. End
Close this application.

C. INFORMATION MENU

The items that have been set with the various screens are displayed to this screen.

- Version
  The name of this programming software (w-kgprg) and the version of w-kgprg.exe is displayed in this field.

- Radio Name
  The model of the radio that you selected in the ***Radio Model*** field is displayed here.

- Kill Pass
  The Kill Password that you set in the ***Kill Password/Times*** field is displayed here.

- Serial No.
  The serial number that you entered in the ***Serial No*** field is displayed here.

- Channel Name
  This field indicates if the channel name function has been selected in the ***Channel Name*** field in the ***Configuration Menu***.

- Encode
  This field displays the encoding format that was selected from the ***Encode Menu*** (3.1). If you selected the ***Single Tone Encode Time*** (3.K), " S " will also be displayed in this field.

- Decode
  This field displays the decoding format that was selected from the ***Decode Menu*** (5.1).

- Decode No.
  This field displays the decode number that was selected from the ***Decode Menu*** (5.2).

- Firmware
  The name of firmware and number of the version are shown when data is read out from KG510.

D. MAIN MENU

You can select each sub-menu from the ***Main Menu***.

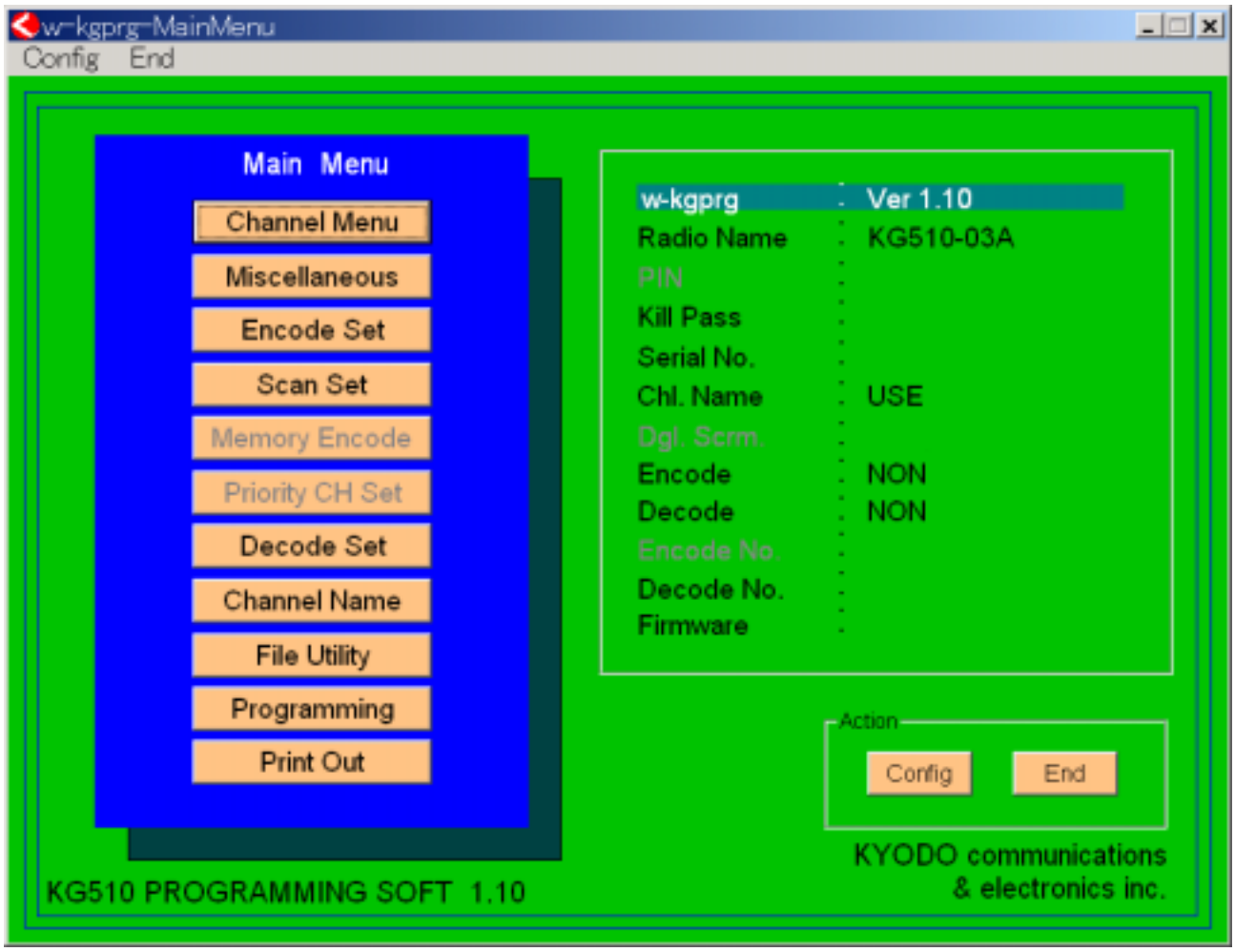

1. Channel Menu
   The ***Channel Menu*** is used to set the radio channel frequencies, as well as the scanning, encryption, power, CTCSS, and DCS functions.

2. Miscellaneous data
   The ***Miscellaneous data*** menu is used to select various miscellaneous parameters of the radio.

3. Encode Set
   The ***Encode Set*** menu is used to select various encoding formats of the radio.

4. Scan set
   The ***Scan set*** menu is used to select various scanning functions of the radio.

5. Decode Set
   The ***Decode Set*** menu is used to select the decoding format to be used by the radio.

6. Channel Name
   The ***Channel Name*** menu is used to enter the names for each channel up to a maximum of 99 Channels.

7. File Utility
   The ***File Utility*** menu is used to read from, write to (save), or delete programming files from the computer.

8. Programming
   The ***Programming*** menu is used to write the programming data to the radio, or to read the programming data from the radio into your PC.

9. Print Out
   The ***Print Out*** menu is used to print the various forms of programming data to your printer.

A. Config
   Go to ***Configuration menu***.

X. End
   Close this application.

.

1.0 Channel Menu

1.1. Reference

The PC will automatically select the reference when you enter the channel frequency data. If you wish, you can manually enter the ***Reference*** frequency to cater for special channel frequencies, but the choices are 2.50, 5.00, 6.25, 10.00, & 12.50 KHz only.

1.2. Frequency

Enter the required channel frequency (including the decimal point) into the ***Frequency*** field. If you enter the reference data first, you must enter a frequency that is a multiple of the "Reference" data. If you don't enter a reference, the programming software will automatically select the appropriate reference when you enter the frequency.

1.3. W/N

This **W/N** field allows you to select among the "Wide", "Narrow" or "4KHz" channel spacing.

1.4. Mode

There are four operation modes for each channel.

This **Mode** field allows you to select the required operating mode from the following: "Simplex", "Semiduplex", "Duplex" or "Repeater".

1.5. Scan

There are two scanning modes when the radio scans the channel bank. If you require channels to be included in the "Program Scan" sequence, you must set this ***Scan*** field to "ON". The other scanning mode is the "All Scanning" mode in which the radio will scan every channel programmed into the radio.

1.6. TX/P
This ***TX/P*** field allows you to select either the "Low" or "High" transmitting power level.

1.7. CTC
If you wish to use CTCSS, you have to enter the CTCSS value for each channel in this ***CTC*** field. Place the cursor on the ***CTC*** field and press [F2]. A drop-down table of CTCSS frequencies will be displayed. Select the required CTCSS tone from this table and enter it into this field.

1.8. DCS
If you wish to use DCS (Digital Coded Squelch), you must enter the DCS value. . Place the cursor on the ***DCS*** field and press [F2]. A drop-down table of DCS frequencies will be displayed. Select the required DCS tone from this table and enter it into this ***DCS*** field.
You cannot use DCS and CTCSS simultaneously on the same channel, and furthermore, the DCS PCB board must be fitted to use DCS.

1.9. INV
This ***INV*** field is provided to allow the value of the DCS to be inverted. If you wish to invert the DCS value, you must to select "1" in this ***INV*** field.

1.A. SCR
The radio is fitted with a voice encryption (scrambler) facility that causes the radio to transmit inverted voice frequencies and allows a receiving radio to reverse the inverted voice frequency, thus enabling the receiver to correctly receive and understand the message.
If you wish to engage the voice encryption (scrambler) function, you must enter "1" in this ***SCR*** field.

1.B. Edit Help
Display ***Edit Help*** window.

1.C. Auto Set
Open ***Auto Channel Edit*** window.

1.X. Exit
Close this menu.

2.0 Miscellaneous data Menu

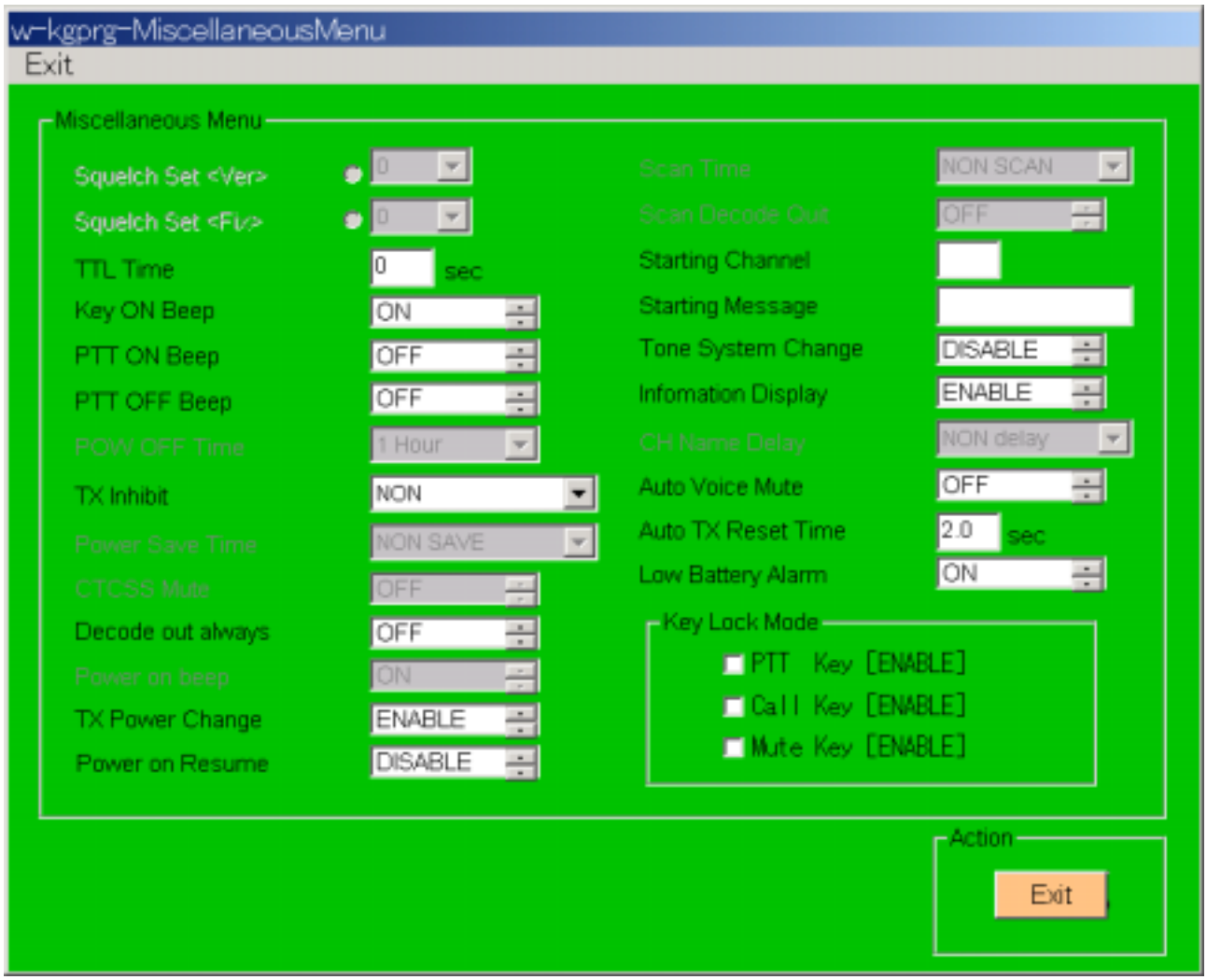

2.1. TTL Time

To engage the radio's TTL (Transmit Time Limiter) function, the TTL period must be set in this ***TTL Time*** field.

With this TTL function engaged, the radio will cease to transmit as soon as the set TTL time period is exceeded, and revert to receive mode of operation.

Eg. Assume that you set the TTL to 60 seconds.

When the radio PTT button is pressed, the radio will transmit for 60 seconds, and then the radio will ignore the PTT button and automatically return to the receiving mode. Once the radio returns to receive mode, it cannot transmit for a 6 second period.

Set the ***TTL Time*** field to 0 seconds in cases where the TTL function is not required. In such cases the radio's transmit function will engage for an infinite time period.

2.2. Key ON Beep

Selecting "ON" in the ***Key ON Beep*** field will cause the radio to sound a beep whenever any key of the radio is pushed.

2.3. PTT ON Beep

Selecting "ON" in the ***PTT ON Beep*** field will cause the radio to sound a beep whenever radio's PTT key is pushed.

2.4. PTT OFF Beep

Selecting "ON" in the ***PTT OFF Beep*** field will cause the radio to sound a beep whenever the radio's PTT key is *released*.

2.5. TX Inhibit

To use the TX Inhibit function, it is necessary to enter the required TX Inhibit format into the ***TX Inhibit*** field. Choose from the following TX Inhibit formats:

"NON"	TX Inhibit is NOT enabled.
"Busy ON"	The radio CANNOT transmit while receiving an RF signal.
"Busy OFF"	The radio CANNOT transmit without an RF signal being present.
"CTC Dec ON"	The radio CANNOT transmit while decoding a valid CTCSS or DCS signal.
"CTC Dec OFF"	The radio CANNOT transmit without decoding a valid CTCSS or DCS signal.
"5Tone Dec ON"	The radio CANNOT transmit if it has been called by a valid 5-Tone or DTMF sequence. If the speaker has been manually "un-muted", the radio would consider that it had been called by a valid 5Tone or DTMF sequence.
"5Tone Dec OFF"	The radio CANNOT transmit unless it has been called with a valid 5-Tone or DTMF sequence.
"TX Lock Out"	The radio CANNOT transmit unless it decodes a valid CTCSS or DCS tone, even though it receives a valid RF signal.

2.6 Decode out always

Selecting "ON" in the ***Decode out always*** field will ensure that all audio will be heard from the radio speaker (assuming the volume is set correctly). In this case, it is impossible to mute the radio speaker by manually pressing the *Mute* key.

2.7 TX Power Change

If you wish to change radio transmitting power (from high or low, or vice versa) by manually entering the correct key sequence, then "ENABLE" must be selected in the ***TX Power Change*** field of this ***Miscellaneous Menu***.

When the transmitting power of the radio is changed manually, then the transmitting power of every radio channel is changed.

By switching the radio "OFF" and the back "ON" again, the transmitting power of the radio will then return to the initial transmitting power settings for each channel of the radio as programmed in the ***TX/P*** field in the ***Channel Menu***. (1.7).

2.8 Power on Resume

The ***Power on Resume*** function is provided to enable the radio to automatically commence two functions when the radio is turned "ON". These two functions are:

Scanning mode
Key locking mode

Select "ENABLE" in the ***Power on Resume*** field to activate these functions.

2.9 Starting Channel

The radio can be programmed to start on a particular channel when the radio is turned "ON".
Enter the required starting channel in this ***Starting Channel*** field.

2.A Starting Message

When you power ON the radio, it will normally illuminate all the LCD segments for 1 second. If required, a unique Starting Message can be displayed during this first 1 second period.
Typically, this Starting Message is used to display a company name, or a regular user's name.
This message is limited to 14 characters or less, and only the following characters may be used:

0-9, A-Z, a-z, / + - * # ! S % ( ) = [ ] < > ? and space

This required message should be entered into this ***Starting Message*** field.
If you do NOT enter a message into this ***Starting Message*** field, the radio will routinely display all of the LCD pixels for 1 second after the radio is powered ON.

2.B Tone System Change

It is possible for the user (in the field) to change the tone system from 5-tone, DTMF, or No-Tone, by

manually entering a set key sequence into the radio. This key sequence will change both the encoder and decoder tone systems.
Even if you power OFF the radio, the radio will retain the currently selected tone system.
Select "ENABLE", or "DISABLE" respectively in the ***Tone System Change*** field to enable or disable this feature.

2.C Information Display

It is possible to display frequency data and other programmed information in the radio's LCD at any time.
The following information can be displayed on the LCD display:

- The RX frequency of the selected channel.
- The TX frequency of the selected channel.
- The channel spacing for the selected channel (Wide or Narrow).
- The operating mode for the selected channel (Base, Repeater, simplex, duplex)
- The RX CTCSS/DCS tone for the selected channel (provided CTCSS/DCS has been programmed for use on the selected channel).
- The TX CTCSS/DCS tone for the selected channel (provided CTCSS/DCS has been programmed for use on the selected channel).
- The tone encoding format (providing 5-Tone signalling was selected during programming of the KG510).
- The tone set (providing 5-Tone signalling was selected during programming of the KG510).
- The ANI mode.
- The tone decoding set (provided 5-Tone or DTMF signalling was selected during programming of the KG510).
- The decode number (provided 5-Tone or DTMF signalling was selected during programming of the KG510).

This information is displayed by pressing the [SHIFT] + [7] keys.
Select "ENABLE" in this ***Information Display*** field to enable this function.

2.D Auto Voice Mute

This function will only operate if CTCSS or DCS was enabled for the particular channel in the ***CTC*** or ***DCS*** fields in the ***Channel Menu***.
If "ON" is selected in the ***Auto Voice*** **Mute** field, audio sounds will only be heard from the radio speaker while the radio is decoding a valid CTCSS or DCS.
If "OFF" is selected in the ***Auto Voice Mute*** field, all audio sounds will be heard from the radio speaker.

2.E Auto TX Reset Time

When the KG510 ceases to receive a carrier frequency, or a valid CTCSS or DCS tone at the repeater channel, it activates the <Auto TX Reset Time> timer. This will keep the KG510 repeating, and allow other users with a valid CTCSS or DCS tone to access the repeater.

2.F LOW Battery Alarm

IF battery supply voltage goes down to 10.8V while repeater TX operation, the alert tone is automatically transmitted after TX is terminated.

2.G Key Lock Mode

The manual Key Lock facility on the radio's front panel is provided to prevent manual or inadvertent operation of keys during normal use. Under normal circumstances, the manual Key Lock operation does NOT lock the following keys:

PTT Key
Call Key
Mute Key

Selecting "DISABLE" in the ***Key Lock Mode*** field will cause these above keys to also lock when the front panel Key Lock function is activated by the user.

2.X. Exit

Close this menu.

3.0 Encode Set Menu

Select ***Encode Set*** from the ***Main menu*** and then select the required tone system from the ***Encode Menu***.

3.1 Encode Menu

5Tone Encode will allow the radio user to transmit individual selective calls and/or group calls to other radio users on the radio channel using 5Tone frequencies.

DTMF Encode will allow the radio user to transmit individual selective calls and/or group calls to other radio users on the radio channel using DTMF tone frequencies.

. Select the ***NON Encode*** field if you do NOT wish to use either 5Tone or DTMF tone encode signalling.

3.2 CPU 5Tone Set

The following tone formats are available: CCIR, 1ZVEI, 2ZVEI, 3ZVEI, PZVEI, EIA, EEA, NATEL.
Select the required 5Tone set in the ***CPU 5Tone Set*** field.

3.3 Tone period

The ***Tone Period*** field is used to set the duration of each tone in a 5Tone (or DTMF) calling sequence.
The following tone periods (that comply with international and national 5Tone standards) are available: 20mS, 30mS, 40mS, 70mS, & 100mS in the 5Tone Encode.
The following tone periods are available: 10mS, 20mS, 30mS, 40mS, 50mS, 60mS, 70mS, 80mS, 90mS, & 100mS in the DTMF Encode.
Select the required tone period in the ***Tone period*** field.

3.4 Encode Delay

An encode delay time can be enabled to delay the transmission of the encoded 5Tone (or DTMF) calling sequence after the CALL key is pressed.

Select the required delay time in the ***Encode Delay*** field. The radio will ignore this delay when it transmits an ANI number.

3.5 First Tone Time

It is possible to extend the time period of the first tone. This is desirable to increase the tone decoding probability when using the radio in scanning mode.

Select the required time period extension in the ***First Tone Time*** field.

3.6 Repeat Tone No

The tones in a 5Tone sequence are sent consecutively without an interval between the tones. As a result, some 5Tone decoders will only recognize the first tone when two consecutive tones are sent using the same tone frequency, even though the tone period will be double. Therefore, it is necessary to encode the Repeat Tone so that the decoder knows that the previous tone has been repeated. Accordingly, when the radio decodes a repeat tone, the radio will display the first number correctly and the same number for the repeated number.

For example, assume that the E-tone was selected as a repeat tone. To call number 11111, enter the encode number as "11111". The radio will automatically encode and transmit "1E1E1" instead of "11111". Therefore, the number to be used as the repeat tone number should be entered into the ***Repeat Tone No*** field.

3.7 Calling Time

The radio can be programmed to encode and send the 5Tone call sequence up to 4 times. If you select two or more times, the radio has an interval of 2.5 seconds between each 5-Tone call sequence. However, if the radio receives a valid answerback (acknowledgment) from the called radio within the 2.5 second interval, then further call sequences to the called radio will cease.

For example, assume that the radio has been programmed to call 4 times, and encodes a 5Tone call sequence of "12345". Then during the first 2.5 second interval, the radio decodes "12345". The radio will then assume that the decoded 5Tone sequence is the acknowledgment from the called radio, and will NOT transmit the 2nd, 3rd, and 4th 5-Tone sequence.

Select the number of times that the radio is required to transmit the 5Tone calling sequence in the ***Calling Time*** field.

3.8 Encode Format

It is possible to select the encoding format used for encoding 5Tone sequences.

If you select the additive decoding number format or the additive ANI number format for the encoding format, the radio will add its decoding number to the encoded number or the radio's ANI number to the encoded number when calls are made to other radios.

In such cases, the called radio can display the decoding number of the calling radio, or the ANI number of the calling radio, (assuming that the caller radio and the called radio have selected the same encoding format).

Select the required encoding format in the ***Encode Format*** field.

3.9 A. pause Time

If you selected either "Encode + A.pause + Decode" or "Decode + A.pause + Encode" encoding format in the Encode Format field (3.8), you are able to enter a time interval between the Encode and Decode sequences. This time period is known as the ***A.pause Time***. Choose from 0mS, 100mS, 200mS, & 300mS. periods and enter the selected time period in the ***A.pause Time*** field.

3.A R. Encode No

In some countries, access to repeaters is enabled by encoding a 5Tone sequence known as the ***R.Encode No***.

It is necessary to enter the correct 5Tone number sequence for the particular repeater in the ***R.Encode No*** field when the radio is to be used in such radio systems.

3.B R. First Tone Time

Some repeater systems may require an extended first tone time period to allow the receiver to settle and decode the first tone correctly. In such cases, it is possible to extend the encode time period of the first tone of the 5Tone repeater access sequence.

One of 16 time periods may be selected, and the selected time period is added to the standard tone period that was entered in the *Tone period* field (3.3).
Enter the required time period into the **R.First Tone Time** field.

3.C B. pause Time

The ***B.pause Time*** period provides a time interval between the encoded repeater access tone sequence and the encoded 5Tone selective calling tone sequence. Select from 100mS, 200mS, 300mS, & 400mS and enter the selected period into the **B.pause Time** field.

3.D ANI Encode No

It is possible to encode an ANI number that will be automatically transmitted by the radio whenever the radio's PTT button is pressed and/or released. This number is used for Automatic Number Identification (ANI) purposes and is usually 5 digits long, but can be up to eight digits long.
Enter the appropriate ANI number into the ***ANI Encode No*** field.

3.E ANI Encode Mode

The timing of the transmitting of the ANI number is selectable in the ***ANI Encode Mode*** field.
Select from:

"START"	When you push the PTT button,
"END"	When you release the PTT button,
"BOTH"	Both,
"NON"	ANI number transmitting function is NOT enabled.

Select the required format in the ***ANI Encode Mode*** field.

3.F ANI Interval Time

Under normal circumstances, and when the ANI Encode function is enabled, the radio will encode the ANI number whenever the PTT button is pressed and/or released.
This ***ANI Interval Time*** function is provided to stop excessive ANI encoding when overs are short. Accordingly, it is possible to set a time period (from 1 to 255 seconds) during which the ANI is NOT encoded. This time period commences when the ANI number is first encoded, and the ANI will NOT encode again until this ***ANI Interval Time*** has elapsed, even if the PTT button is pressed several times during this period.
Setting the ***ANI Interval Time*** to 0 seconds will disable this function.
Enter the required time into the ***ANI Interval Time*** field.

3.G Call Repeater No

If "ENABLE" has been selected in the ***Call Repeater No*** field, the radio will automatically transmit the repeater access number whenever another radio is called with the CALL key. In this case, once the CALL key is pressed, the radio encodes the repeater access number first and then encodes the called radio number.
If "DISABLE" has been selected in the ***Call Repeater No*** field, the radio will encode only the called radio number after pressing the CALL key. However, if the SHIFT key as well as the CALL key is pressed, radio will encode the repeater access number and then encode the called radio number.
Select "ENABLE" **or** "DISABLE" as required in the ***Call Repeater No*** field.

3.H DTMF encode

It is possible to program the radio to use the DTMF encoding function as well as the 5Tone encoding function. In operation the user will have to switch between DTMF encode mode and 5Tone encoding mode by entering the key sequence described in the operators manual.
Select "ENABLE" in the ***DTMF encode*** field to enable both encoding formats.
Selecting Repeater "ENABLE" will automatically select "B.Pause" which inserts a time period between the Repeater Number and the 5Tone Encode sequence. This "B.Pause" period is set in the ***B.Pause Time*** Field (3.C).

3.I Attach Decode No

Selecting the ***Attach Decode No*** function will cause the radio to add its decode number to the encoded number whenever the radio transmits an encode number to another radio.
In such cases, (and assuming the called radio has the *Attach Decode No* function enabled), the called radio will display the calling radio's decode number in the LCD display.
This function operates as follows:

- If the user presses the [*] key, the previously entered encode number will be deleted. If no encode number has been entered since the radio was last switched "ON", then the radio will return to the normal operating condition.
- The user enters the number (encode number) of the radio the user wishes to call.
- The user then presses the [#] key and the radio will transmit the entered encode number, the B-tone, and the calling radio's decoding number. (The B-tone is used as a delimiter).
- The called radio will then display the calling radio's decode number in the called radio's LCD display.
- If the user (calling party) presses the [SHIFT] + [#] keys, the calling radio will only transmit the entered encode number (***without*** attaching the calling radio's decode number).

Select "ON" in the ***Attach Decode No*** field to enable this function.

3.J Auto ANI encode

If "ENABLE" has been selected in the ***Auto ANI encode*** field, the radio will automatically transmit its own ANI No. when a carrier frequency(or CTCSS, DCS) disappeared in the repeater channel.

3.K Single Tone Encode Time

A single tone may be encoded as the tone signalling method. If required, the duration of the encoding time should be entered into ***Single Tone Encode Time*** field.

3.X Exit

Close this menu.

4.0 Scan Menu

The Scan Menu is used to set the required priorities for priority scanning.

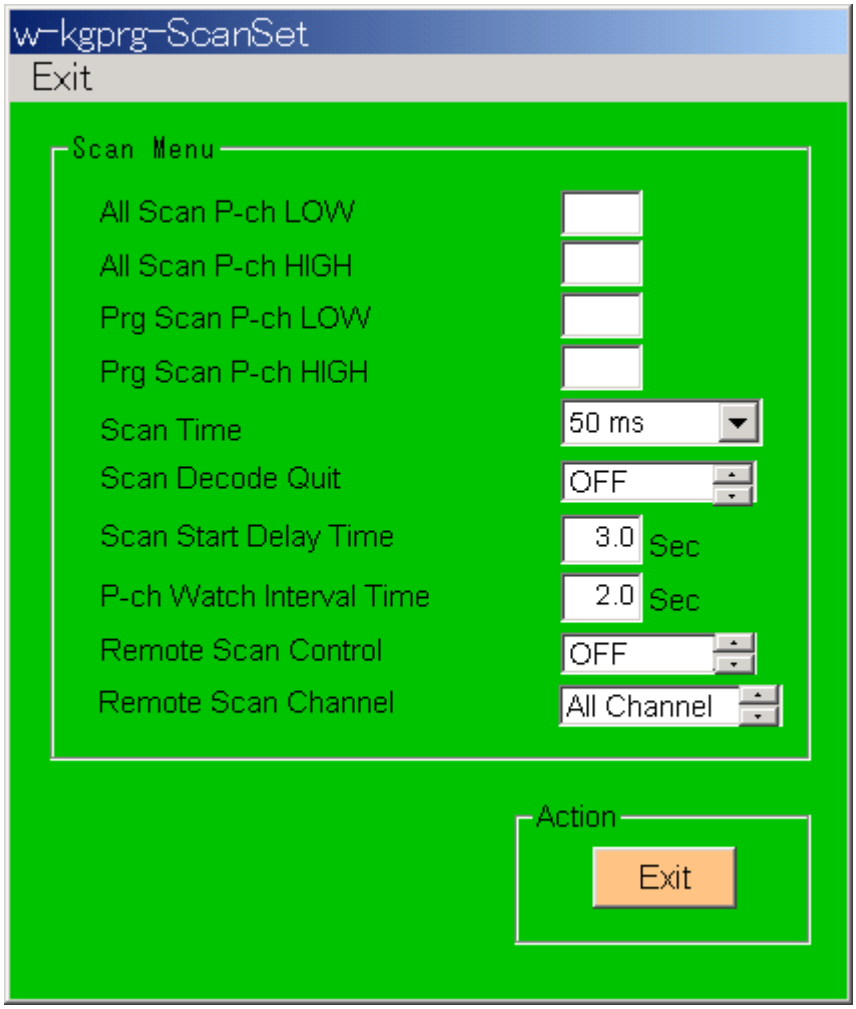

4.1 All Scan P-ch LOW

The ***All Scan P-ch LOW*** field is used to enter the second priority channel that is used by the radio when it is in the *All Channel Scanning* mode.
Enter the required channel number in the ***All Scan P-ch LOW*** field.

4.2 All Scan P-ch HIGH

The ***All Scan P-ch HIGH*** field is used to enter the first priority channel that is used by the radio when it is in the *All Channel Scanning* mode. The ***All Scan P-ch HIGH*** channel will get precedence over the *All Scan P-ch LOW* channel when in use.
Enter the required channel number in the ***All Scan P-ch HIGH*** field.

4.3 Prg Scan P-ch LOW

The ***Prg Scan P-ch LOW*** field is used to enter the second priority channel that is used by the radio when it is in the *Programmed Channel Scanning* mode.
Enter the required channel number in the ***Prg Scan P-ch LOW*** field.

4.4 Prg Scan P-ch HIGH

The ***Prg Scan P-ch HIGH*** field is used to enter the first priority channel that is used by the radio when it is in the *Programmed Channel Scanning* mode. The ***Prg Scan P-ch HIGH*** channel will get precedence over the *Prg Scan P-ch LOW* channel when in use.
Enter the required channel number in the ***Prg Scan P-ch HIGH*** field.

4.5 Scan Time

It is possible to select the time that the radio stays on a channel while in the channel scanning mode. During scanning, the radio will remain on the channel for the time period selected. If the radio does NOT receive a signal during this time period, it will advance to the next channel to be scanned and repeat the process.

Select the required time period in the ***Scan Time*** field if you intend to use the radio's scanning function. Select "NON" in the ***Scan Time*** field if you are NOT using the scanning function.

4.6 Scan Decode Quit

Under normal circumstances, during scanning, the radio will resume scanning as soon as the RF signal is removed and even if it has decoded a valid selective call sequence. In some cases, it may be desirable to have the radio *stop scanning* upon receipt of a valid selective call. The Scan Decode Quit provides this function. When enabled, the radio will stop scanning, and remain on the channel indefinitely, as soon as the radio successfully decodes a valid 5-Tone or DTMF calling sequence.

Enter "ON" in the ***Scan Decode Quit*** field to enable this function.

4.7 Scan Start Delay Time

It is possible to select the time that the radio delays to start channel scanning while in the channel scanning mode.

Select the required time period in the ***Scan Start Delay Time*** field if you intend to use the radio's scanning function.

4.8 P-ch Watch Interval Time

It is possible to select the time interval that the radio listens on the priority channel, while in the priority scanning mode.

Select the required time interval in the ***P-ch Watch Interval Time*** field if you intend to use the radio's priority scanning function.

4.9 Remote Scan Control

This function is to enable scan remotely. To enable this function, please follow the steps described below.

1) Select “ON” mode in the ***Remote Scan Control*** of the programming soft.
2) Open the Pin No. 5(1-level) of the rear 25P D-sub connector to enable remote scan.
   Ground the Pin No. 5 to disable remote scan function.
3) Open the Pin No. 6 of the rear 25P D-sub connector to enable priority scan.
   Ground the Pin No. 6 to enable normal scan.

Note: The 25P D-sub connector on the rear panel has 6-remote channel control pins, i.e. 64 channels capability, but if you select remote scan mode, only 4-pins are functional. So the maximum selectable channels are limited to 16.
However, the number of scan channels are programmable up to 99 channels.

4.A Remote Scan Channel

4.X Exit

Close this menu.

5.0 Decode Menu

Use this menu to select the required tone decoding system.

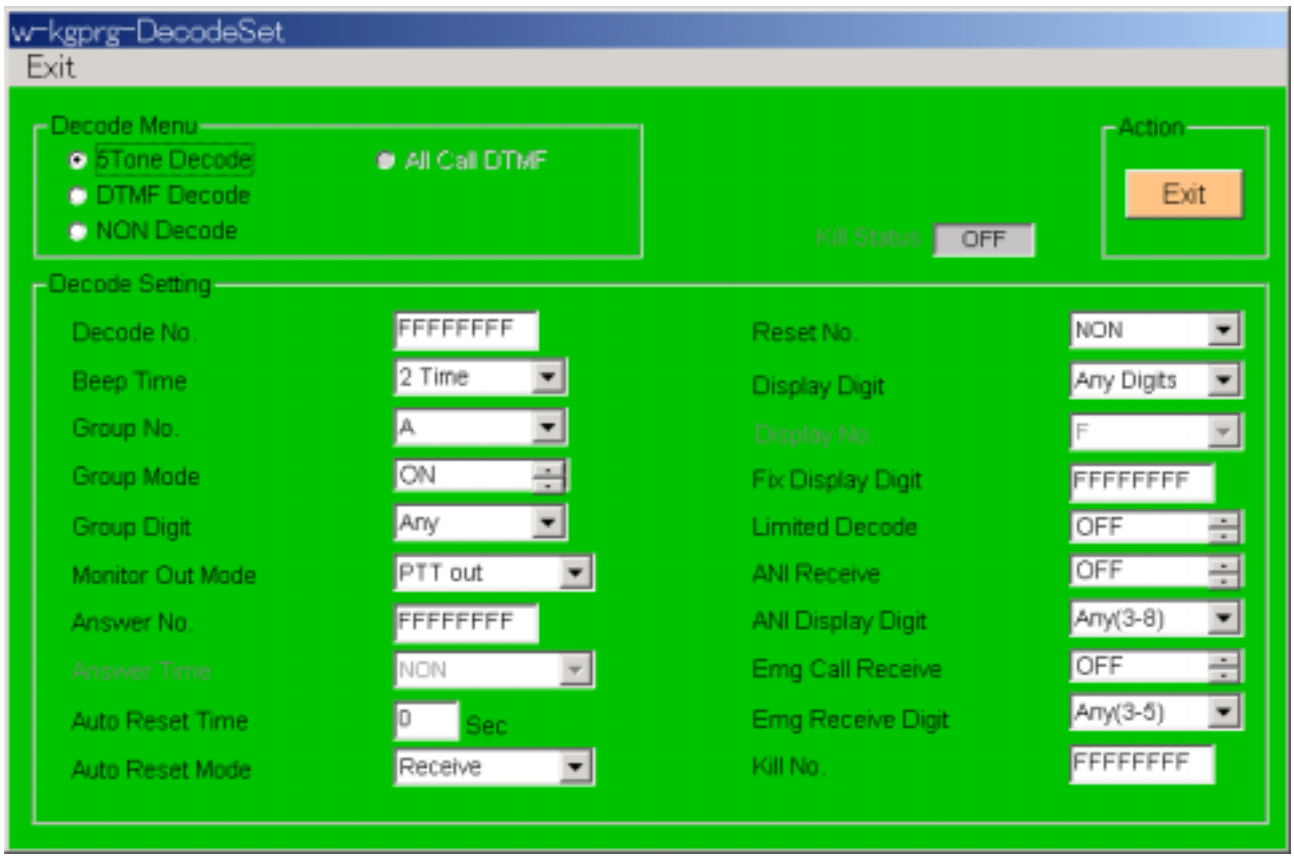

5.1 Decode Menu

Select ***5Tone Decode*** if the radio is to decode 5Tone sequential tones.
Select ***DTMF Decode*** if the radio is to decode DTMF signalling tones.
Select ***NON Decode*** if the radio is NOT required to decode either 5Tone sequential tones or DTMF signalling tones.

5.2 Decode No.

Enter the Decode Number for the radio into the *Decode No* field.
If this number is omitted, it is not possible for any other radio to call this radio except in the case of **Emergency calls**.

5.3 Beep Time

The radio will make a "beep" sound when it is called by another radio. (Ie. When the radio successfully decodes a 5Tone (or DTMF) selective calling tone sequence).
It is possible for the radio to sound these "beep" tones up to 6 times, continuously, or not at all, depending upon the selection programmed into the radio.

If "**NON**" is selected in the ***Beep Time*** field, then NO "beeps" will be heard. If **Continue** is selected in the ***Beep Time*** field, the radio will continue to "beep" until the MUTE or PTT key is pressed, or until the radio is switched OFF.
If **1 Time** to **6 Time** was selected in the ***Beep Time*** field, the radio will continue to "beep" until the selected number of "beeps" have been sounded.
Select the required selection in the ***Beep Time*** field.

5.4 Group No

It is possible to program the radios to transmit and receive group calls. The group call facility enables users to call just specific groups of other users. To receive group calls, radios must be programmed to recognize a specific tone as the *group call tone*.

Select the selected *group call tone* in the ***Group No*** field.

5.5 Group Mode

Select and enter "ON" into the ***Group Mode*** field to use the group calling function.

For example, assume that "A" tone is the group tone and "any" is the group digit. All radios that decode on receipt of numbers from 12300 to 12399 will decode simultaneously as a group when number 123AA is encoded.

However, all radios have to be programmed with the same group tone.

5.6 Group Digit

The group calling tone can be entered as follows to provide the following group calling format.

"Any" The radio will recognize the group tone in any position and decode the appropriate group.

"1 Digit" The radio will only decode groups with the Group tone in the first digit location within the decoded number.

"2 Digit" The radio will only decode groups with the Group tone in the second digit location within the decoded number.

⇓ ⇓ ⇓ ⇓

"8 Digit" The radio will only decode groups with the Group tone in the eighth digit location within the decoded number.

It is possible to enter more than one group calling tone in the group call number.

5.7 Monitor Out Mode

The condition required to automatically open the mute (speaker) on the radio can be selected. Select from the following formats:

"Decode out" When only the individual radio is called.
Selecting this format will NOT allow the radio's speaker to be opened manually by pressing the MUTE key.

"Call out" When the radio calls another radio using 5Tone or DTMF signalling.

"PTT out" Whenever the radio's PTT button is pressed.

"Pow ON out" When the radio is turned ON.

Select and enter the required format into the ***Monitor Out Mode*** field.

5.8 Answer No

The radio will automatically transmits this number (as an acknowledgment or automatic answer back) whenever the radio is called by another radio but the radio will NOT transmit this number when the radio is grouped called.

If required, enter the required number into the ***Answer No*** field.

5.9 Answer Time

When a radio validly decodes a calling sequence (ie. When it is selectively called) it can be programmed to answerback (or acknowledge receipt of the call). It is also possible to set the Answer Time period before it answers the call.

With DTMF signalling, the radio automatically transmits the (B-tone) as the Answerback tone after being called.

The radio will NOT automatically transmit the Answerback Tone when it is group called.

Select "NON" when this function is NOT required.

Select and enter the required time period or NON in the ***Answer Time*** field.

5.A Auto Reset Time

The auto-reset function will automatically close the radio's speaker after a specified time period has elapsed. This time period can be set between 1 second and 255 seconds.

Setting this time period to 0 seconds will DISABLE this function.

Enter the required time period into the ***Auto Reset Time*** field.

5.B Auto Reset Mode

If the Auto Reset Time has been selected (5.A), then the condition under which the radio automatically closes the speaker must be selected from the following formats:

"Total"	Whenever the Auto Reset Time has passed after the MUTE was last opened.
"Receive"	The radio clears the Auto Reset Timer whenever the radio returns to transmitting mode from receiving mode, and restarts the Auto Reset Timer whenever the Auto Reset Time has passed after the radio's receiver last became active.
"Busy override"	The radio clears the Auto Reset Timer whenever the radio returns to transmitting mode, and restarts the Auto Reset Timer as soon as the radio receiver ceases to receive a signal.
"CTCSS override"	The radio clears the Auto Reset Timer after the radio decodes a valid CTCSS tone and when it enters the transmitting mode, and restarts the Auto Reset Timer whenever the radio ceases to decode a valid CTCSS tone.

Select the required Auto Reset Mode in the ***Auto Reset Mode*** field.

5.C Reset No

It is possible to transmit a ***Reset No*** tone that can be used to remotely MUTE the speaker of a called radio. This ***Reset No*** must comprise of the radio's decode number plus the "C" or "D" tone or both to MUTE the radio's speaker. Only the *Reset No* is entered at this point. One of the following *reset formats* can be selected:

"NON"	The Reset No function is NOT enabled.
"C"	The C-tone is used as the reset tone in the 5Tone decode.
"D"	The D-tone is used as the reset tone in the 5Tone decode.
"C D"	The C-tone and the D-tone is used as the reset tone in the 5Tone decode.
"#"	The #-tone is used as the reset tone in the DTMF decode.
"A"	The A-tone is used as the reset tone in the DTMF decode.
"# A"	The #-tone and the A-tone is used as the reset tone in the DTMF decode.

Select the required *Reset No* tone in the ***Reset No*** field.

5.D Display Digit

The *Display Digit* function is used to prevent the radio from displaying the caller's ANI number in the LCD when the number of tones being used by the caller is different to that set in this ***Display Digit*** field. In other words, the length of the caller's ANI number must match that set in the ***Display Digit*** field to be displayed in the LCD.

For example, assume that "5 Digits" has been entered into the Display Digit field.

If a caller's ANI number is 12345, then that number will be displayed.

If a caller's ANI number is 1234, then that number will NOT be displayed, and,

If a caller's ANI number is 123456, then that number also will NOT be displayed.

"Any Digits" should be selected when this function is NOT required.

Entering "Any Digits" in the Display Digit field will cause any calling number to be displayed in the radio's LCD.

Select the required number of digits in the ***Display Digits*** field.

5.E Fix Display Digit

As with *Display Digit*, the ***Fix Display Digit*** can be used to prevent the radio from displaying unwanted caller's ANI numbers. In this case, the radio will only display the caller's ANI number in the LCD display when the number of digits in the caller's ANI number matches the number that is set in the ***Fix Display Digit*** field.

For example, assume that "123FFFFF" is entered in the ***Fix Display Digit*** field, and "5 Digits" has been entered in the *Display Digit* field (6.1.B).

If a caller's number is 12345, this full ANI number will be displayed in the LCD, but if a caller's number is 123456 or 12445, then these numbers will NOT be displayed in the LCD.

Select and enter the required digits in the ***Fix Display Digit*** field when this function is required.

5.F Limited Decode

The ***Limited Decode*** field is used to ENABLE the Display Digit and the Fix Display Digit functions. The ***Limited Decode*** field must be set to "ON" if invalid ANI calls from other parties are to be ignored. (Invalid is defined as NOT meeting the conditions set in the *Display Digit* and/or *Fix Display Digit* fields).

Select ON or OFF as required and enter the required condition in the ***Limited Decode*** field.

5.G ANI Receive

The KG510 has the capability to display any calling radio's ID (ANI) number. When the KG510 receives an **ANI number**, "DISP" will be displayed on the fourth line of the LCD display (and continue to flash) and the radio's ID number will be displayed to the right of "DISP":

Select "ON" in the **ANI Receive** field to enable this function.

5.H ANI Display Digit

The **ANI Display Digit** function is provided to reduce the number of, or eliminate unwanted ANI displays by instructing the receiving radio to ignore all ANI displays with other than the specified number of digits.

For example, assume that "4 digits" has been entered in the **ANI Display Digit** field.

- If the caller's ANI number is "1234", then the Base-radio will display "1234" in the Base-radio's LCD display.
- But, if the caller's ANI number is "12345", then the Base-radio will ignore this ANI number.

Select the required number of digits in the ***ANI Display Digit*** field.

5.I Emergency Call Receive

The **Emergency Call Receive** function uses the tone signalling to make emergency calls to specific radios on specific channels.

This function operates as follows:

Assume that the calling radio has "00012345" programmed as its ***emergency number***, and that the calling radio has "12345" programmed as its ***decode number***.

- The user presses the emergency button on the calling radio.
- The calling radio will then transmit the emergency number ("00012345").
- When the Base-radio (assuming the Base-radio has ***Emergency Call Receive*** enabled) receives the "00012345" emergency call, ("000" indicates an emergency call), the Base-radio will automatically transmit "12345" to the emergency calling radio.
- Simultaneously, the Base-radio will display the emergency callers decode number "12345" on its LCD display, sound an alerting "Beep" tone, and flash the LCD backlight.
- After 14 seconds, the Base-radio will again transmit the emergency callers decode number "12345".
- Upon receipt of its own decode number ("12345"), the emergency radio will return to the normal operating condition.
- If the user of the Base-radio presses the PTT, the "Beeping" sound from the Base-radio will cease.
- Pressing the [SHIFT] + [*] keys by the user of the Base-radio will return the Base-radio to the normal operating mode.

Select "ON" in the **Emergency Call Receive** field to enable this function.

5.J Emergency Receive Digit

The **Emergency Receive Digit** function is provided to reduce the number of, or eliminate unwanted emergency calls by instructing the receiving radio to ignore all emergency calls with other than the specified number of digits.

For example, assume that "5 digits" has been entered in the **Emergency Receive Digit** field.

- If the emergency caller's emergency number is "00012345", then the Base-radio will display "12345" in the Base-radio's LCD display.
- But, if the emergency caller's emergency number is "0001234", then the Base-radio will ignore this emergency number.

Select the required number of digits in the ***Emergency Receive Digit*** field.

5.K Kill Status

This ***Kill Status*** field is only used to **display** the Kill status of the radio. When the programming data is read from the radio to a PC, the *Kill Status* of the radio is displayed in this field.

The ***Kill Status*** field will display "ON" when the radio is in the "Killed" condition and will display "OFF" when the radio is in normal operating condition.

The data in this field CANNOT be changed. Reprogramming the radio is the **only** way of removing the radio from the "*Killed*" condition.

5.X Exit

Close this menu.

6.0 Channel Name

The ***Channel Name*** menu is used to enter the Channel Names for each Channel.

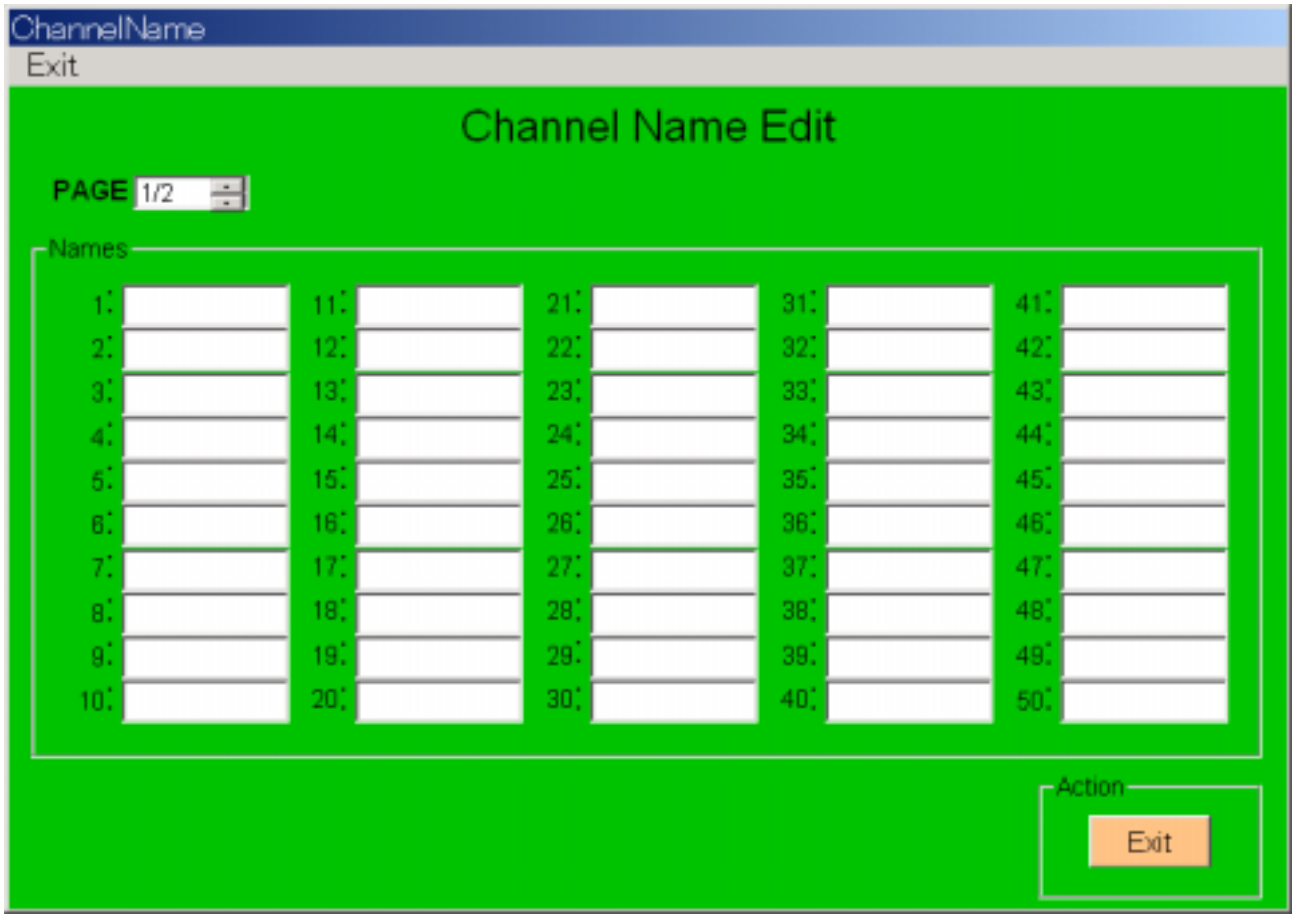

Enter the required Channel Name into the ***Channel Name*** field that corresponds with the appropriate Channel Number.

7.0 File Utility menu

The File Utility is used to Read, Write, and Delete the programming files to or from the PC.

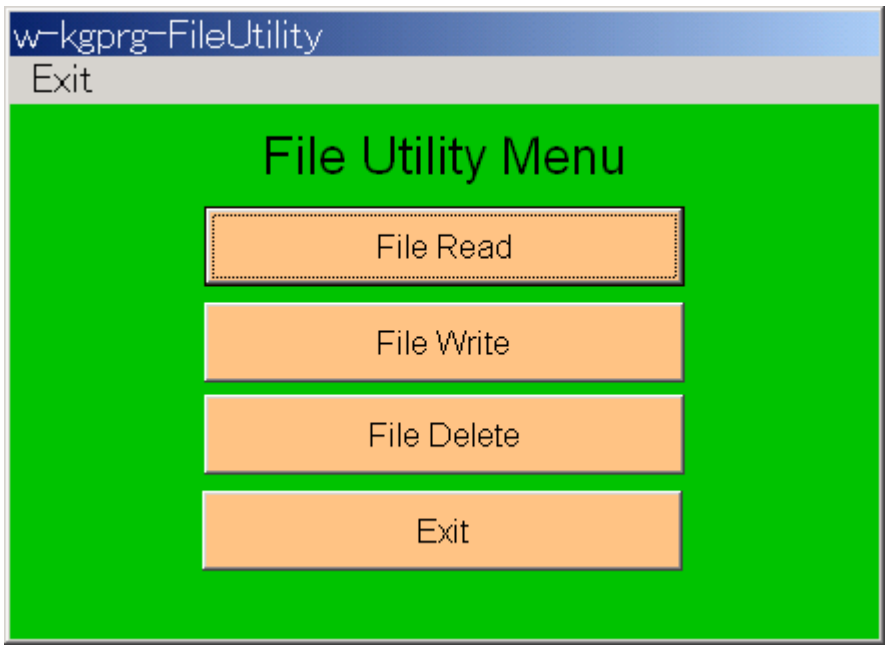

7.1 File Read Utility

Use the ***File Read Utility*** menu to read program files stored on the computer.
The ***File Read Utility*** will display a list of files stored on your computer.
the file list will include only files that have .**0B3** as an extension.

7.2 File Write Utility

Use the ***File Write Utility*** menu to write program files to your computer storage medium.
The ***File Write Utility*** will display a list of files stored on your computer.

7.3 File Delete Utility

Use the ***File Delete Utility*** menu to delete a programming file from the computer.
The ***File Delete Utility*** will display a list of programming files. Select a file and click ***Delete***.
Files can also be deleted with Windows programs without problems.

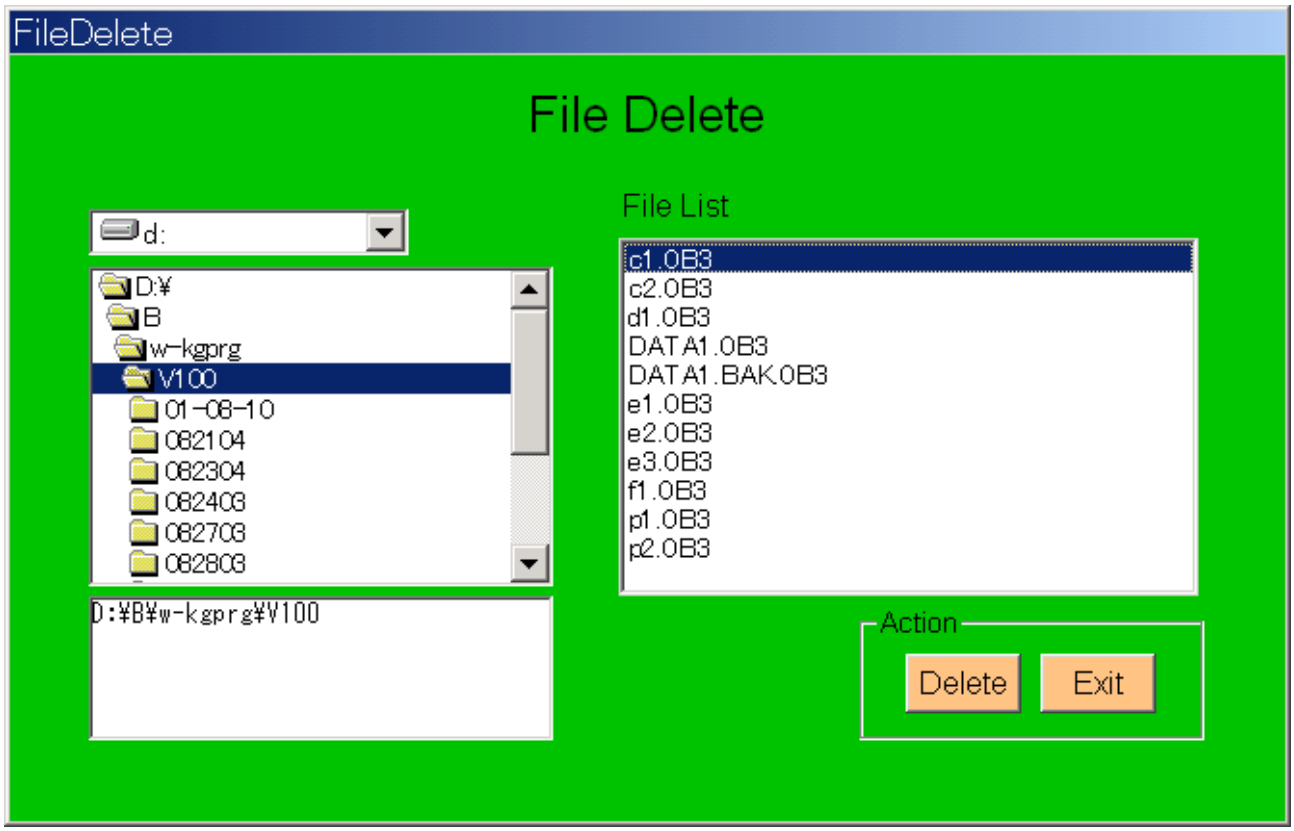
FileDelete
File Delete
d:
D:¥
B
w-kgprg
V100
01-08-10
082104
082304
082403
082703
082803
D:¥B¥w-kgprg¥V100
File List
c1.OB3
c2.OB3
d1.OB3
DATA1.OB3
DATA1.BAK.OB3
e1.OB3
e2.OB3
e3.OB3
f1.OB3
p1.OB3
p2.OB3
Action
Delete
Exit

8.0 Program menu

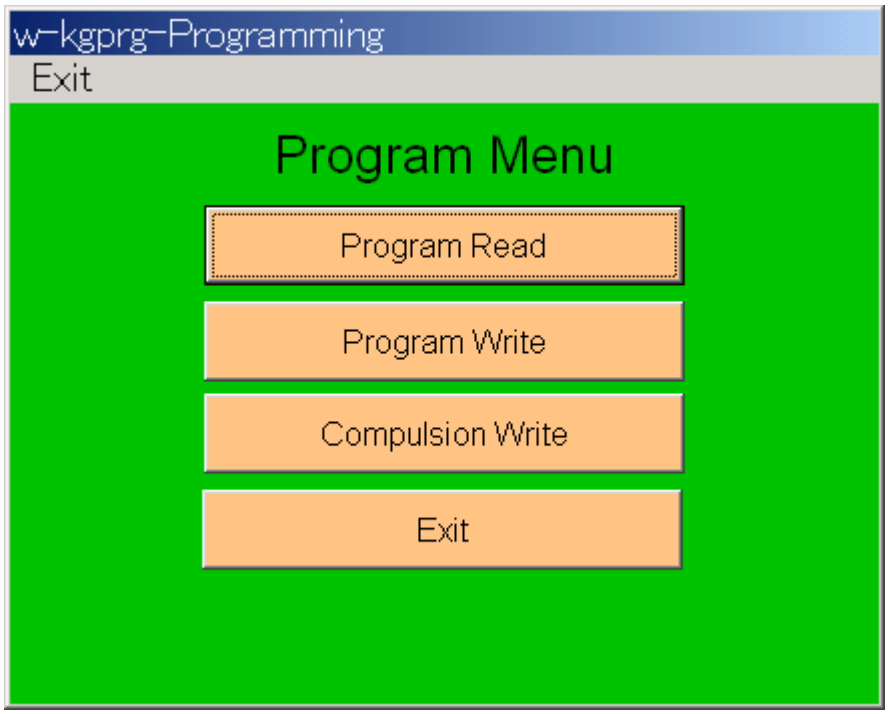

Use this menu when reading data from, or writing data to the radio.

8.1 Program Read
Use ***Program Read*** menu to read the programming data from the radio.

8.2 Program Write
Use the ***Program Write*** menu to write programming data to the radio.
The **w-kgprg programming software** writes only the changed data to the radio.

8.3 Program Compulsion Write
Use the ***Program Compulsion Write*** menu to write all programming data to the radio.

8.X Exit
Close this menu.

9.0 Print menu

Use the Print Menu to print programming information to a printer.

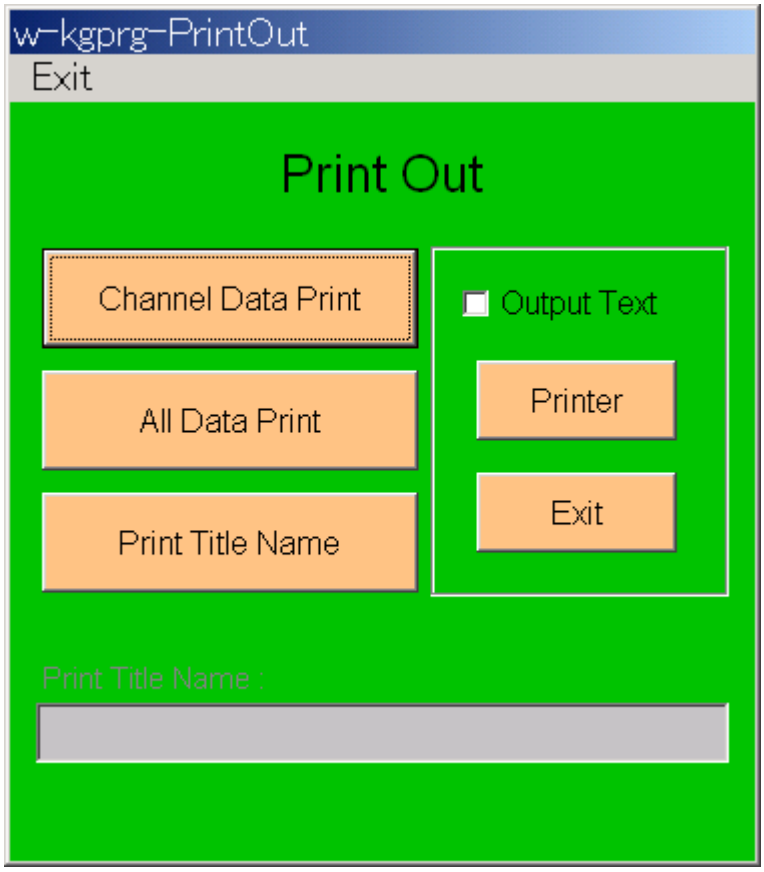

9.1 Channel Data Print
Use the ***Channel Data Print*** menu to print only the channel data to a printer.

9.2 All Data Print
Use the ***All Data Print*** menu to print all programming data to a printer.

9.3 Print Title Name
The ***Print Title Name*** menu is provided to allow users to insert a title header when printing programming data to a printer.
The title header is printed as the header line on the programming data printout.

9.4 Output Text
Output to the text file instead of the printer.

9.5 Printer
Open printer setting window.

9.X Exit
Close this menu.

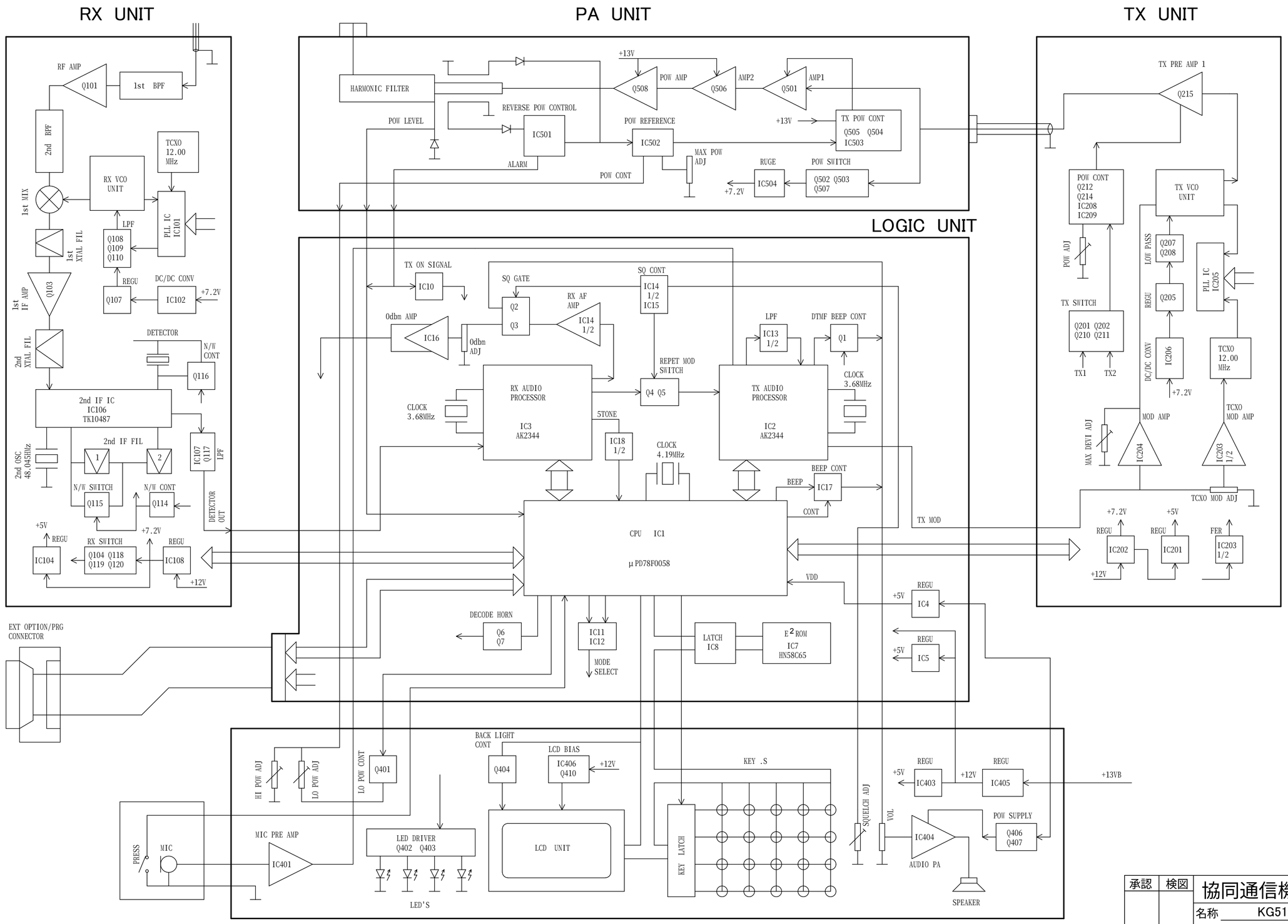

承認	検図	協同通信機製造株式会社
		名称 KG510-80MHz
		BLOCK DIAGRAM
設計	製図	図番 2A-SA0043
		51BLK80Y

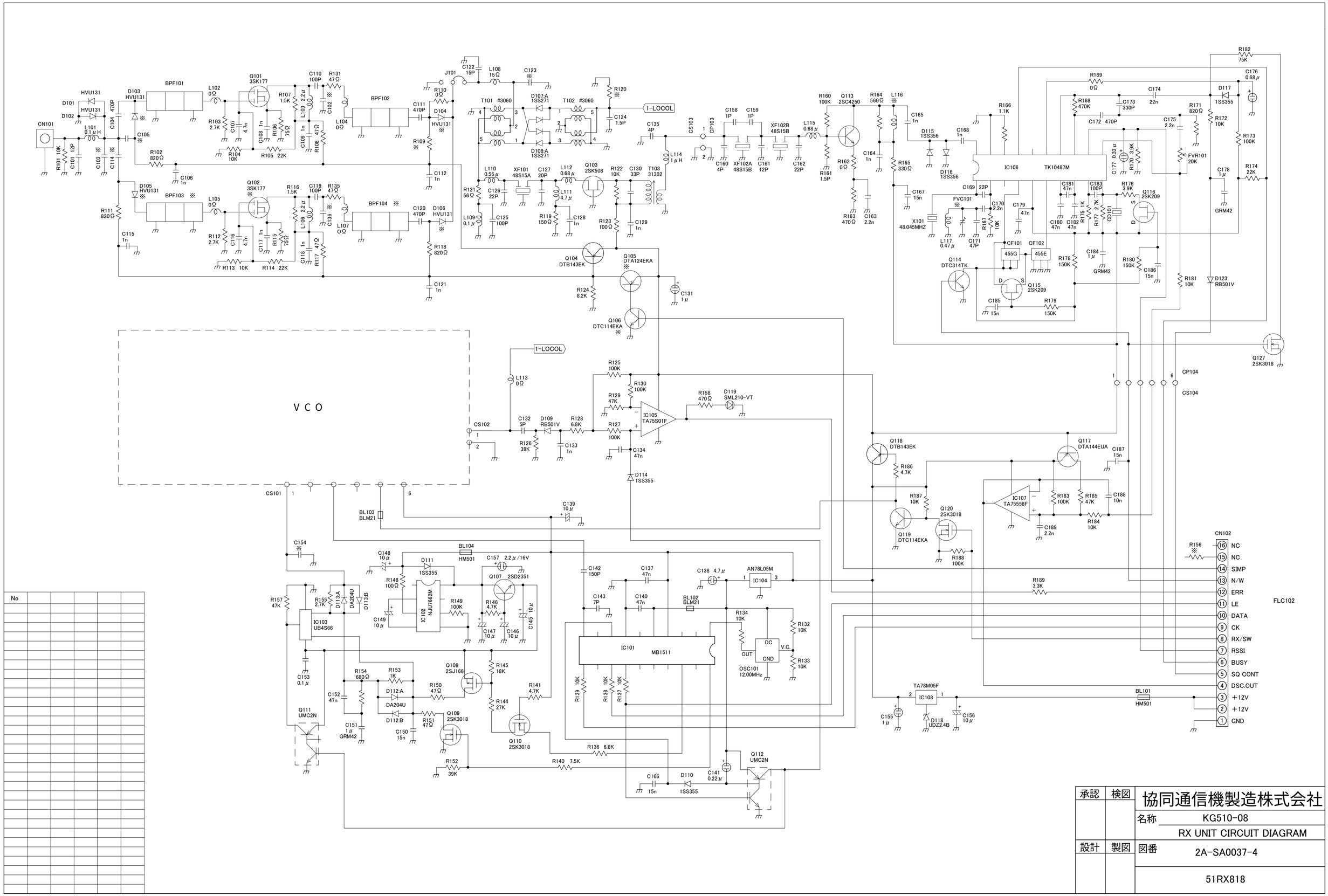

No					

承認	検図	協同通信機製造株式会社
		名称 KG510-08
		RX UNIT CIRCUIT DIAGRAM
設計	製図	図番 2A-SA0037-4
		51RX818

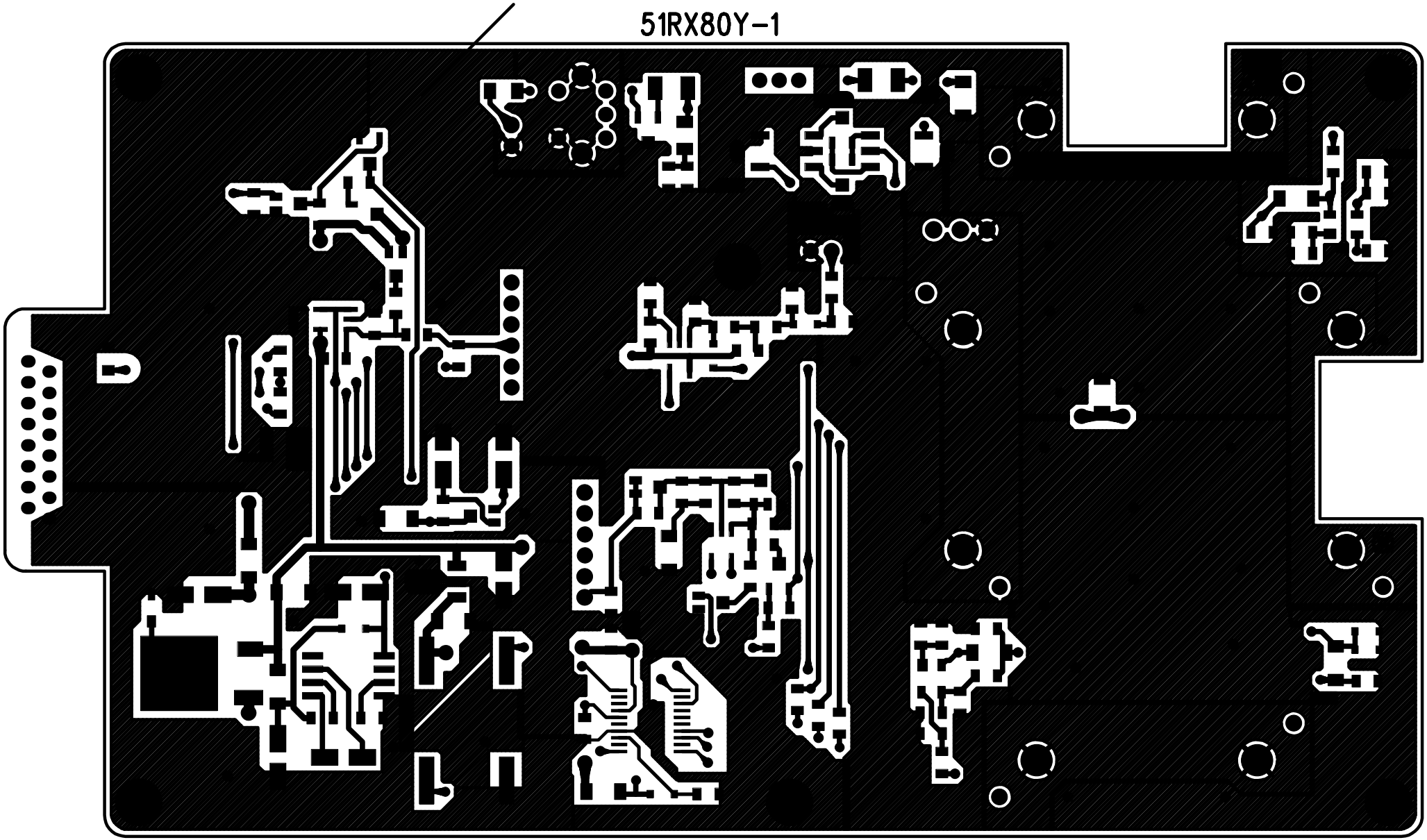
51RX80Y-1

51RX80Y-1

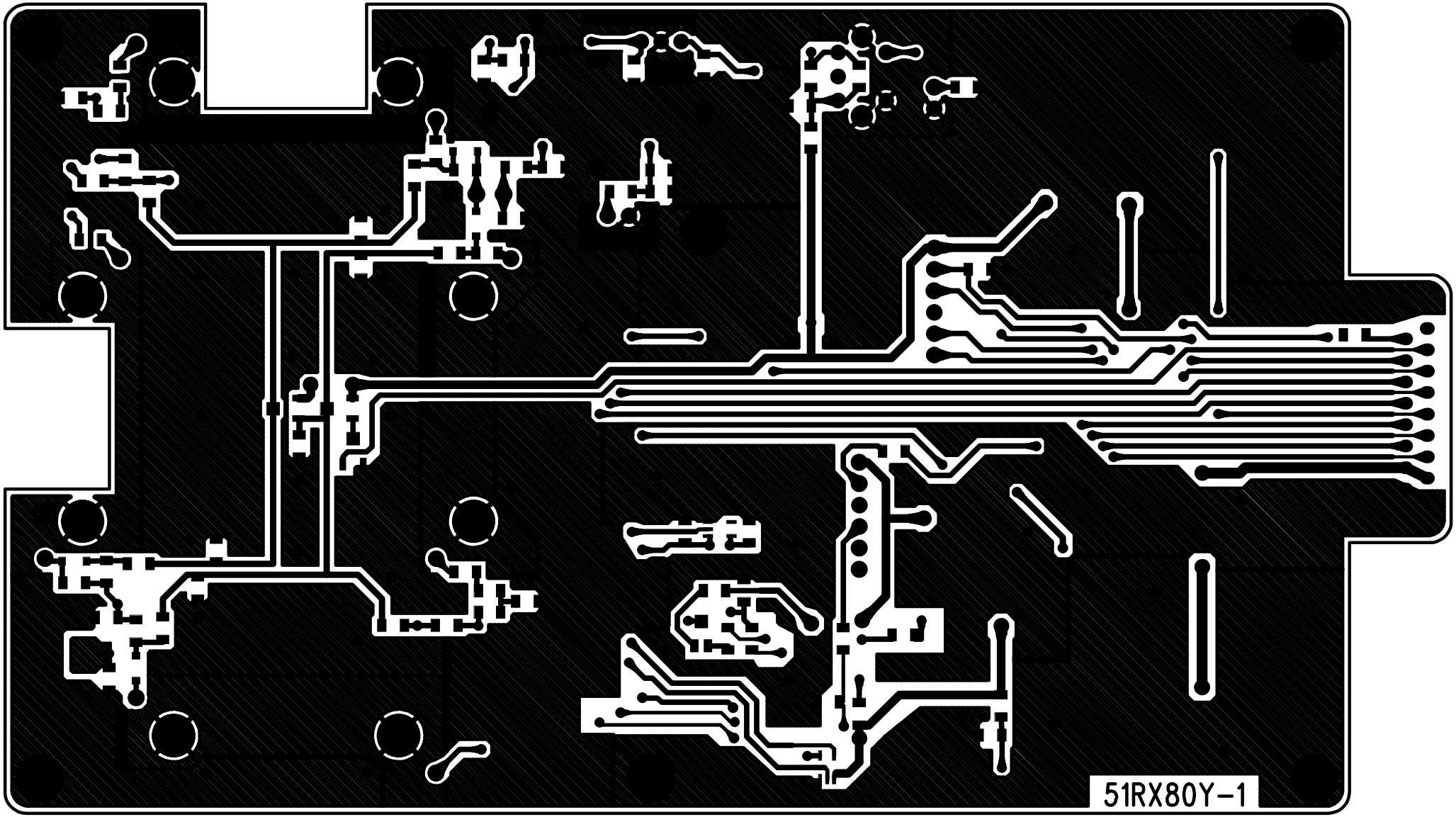

51RX80Y-1

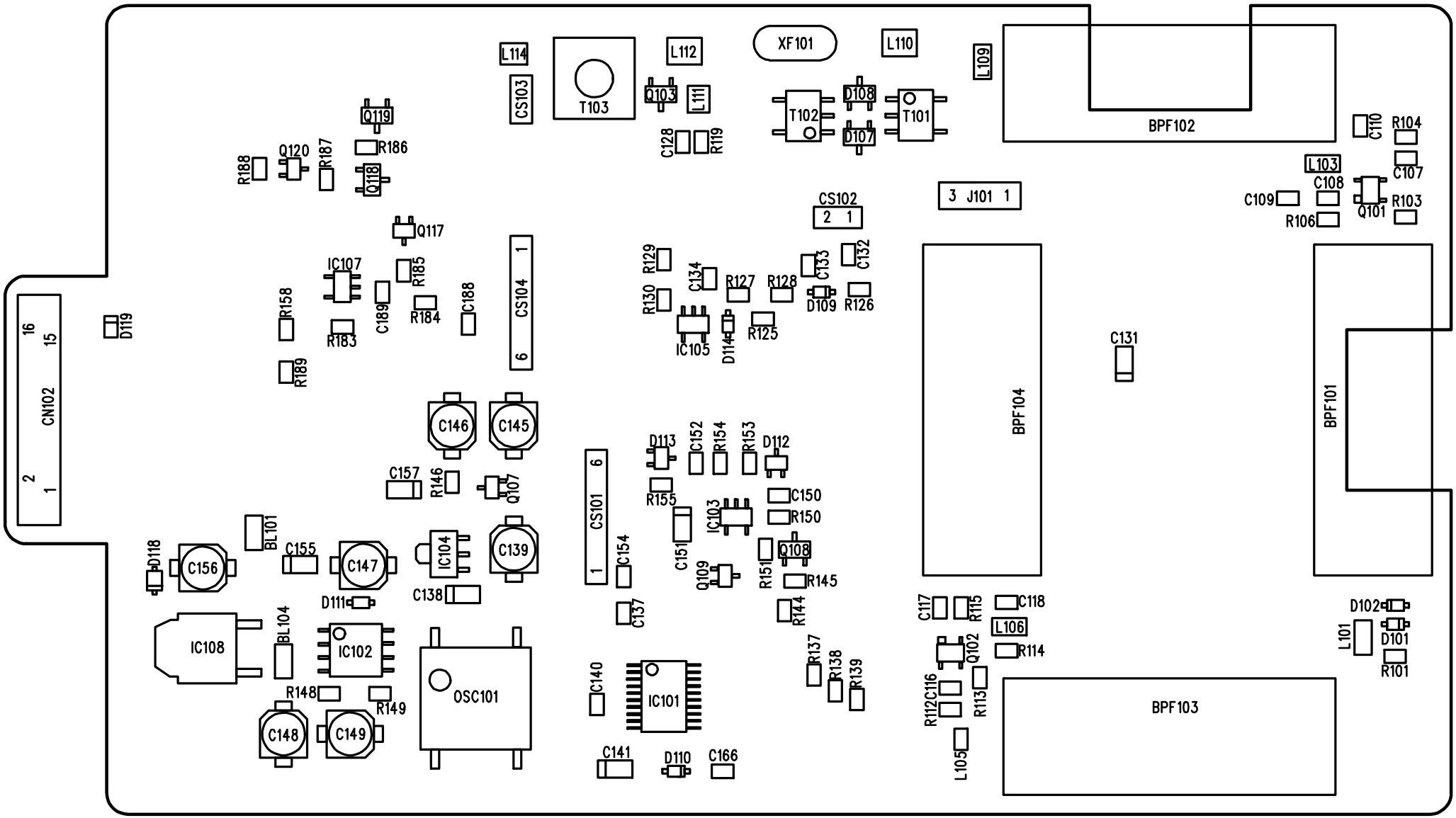
L114
CS103
T103
L112
Q103
L111
XF101
L110
L109
T102
D108
D107
T101
BPF102
C110
R104
L103
C107
C108
C109
Q101
R103
R106
Q119
R186
R188
Q120
R187
Q118
CS102
2 1
3 J101 1
Q117
IC107
R185
R158
C189
R184
C188
R183
R189
D119
CN102
16
15
2
1
CS104
1
6
R129
R130
C134
R127
R128
C133
C132
D109
R126
IC105
D114
R125
C131
BPF104
BPF101
C146
C145
D113
C152
R154
R153
D112
C157
R146
Q107
R155
C150
R150
IC103
CS101
6
1
BL101
C155
C156
D118
C147
IC104
C139
C151
C154
Q108
Q109
R151
R145
D111
C138
C137
R144
C117
R115
C118
L106
R114
D102
D101
R101
L101
IC108
BL104
IC102
OSC101
Q102
R137
R138
R139
R148
R149
C140
IC101
R112
C116
R113
BPF103
C148
C149
C141
D110
C166
L105

51RX80Y-1

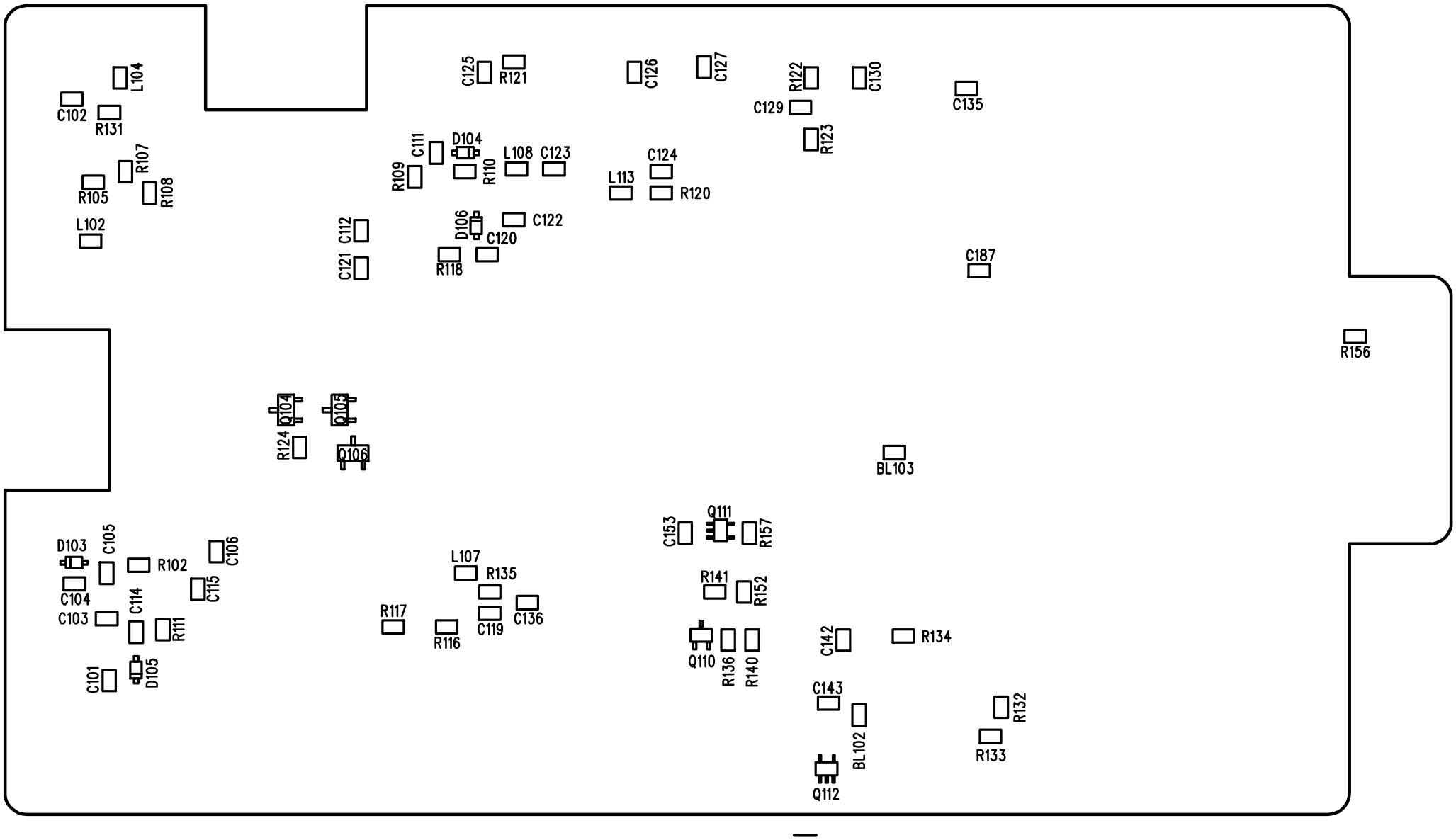
L104
C102
R131
R107
R105
R108
L102
C125
R121
C126
C127
R122
C130
C129
C135
R123
C111
D104
L108
C123
C124
R109
R110
L113
R120
C112
D106
C122
C120
C121
R118
C187
R156
Q104
Q103
R124
Q106
BL103
Q111
C153
R157
D103
C105
R102
C106
L107
R135
R141
R152
C104
C115
C114
C103
R111
R117
R116
C119
C136
Q110
R136
R140
C142
R134
C101
D105
C143
R132
BL102
R133
Q112

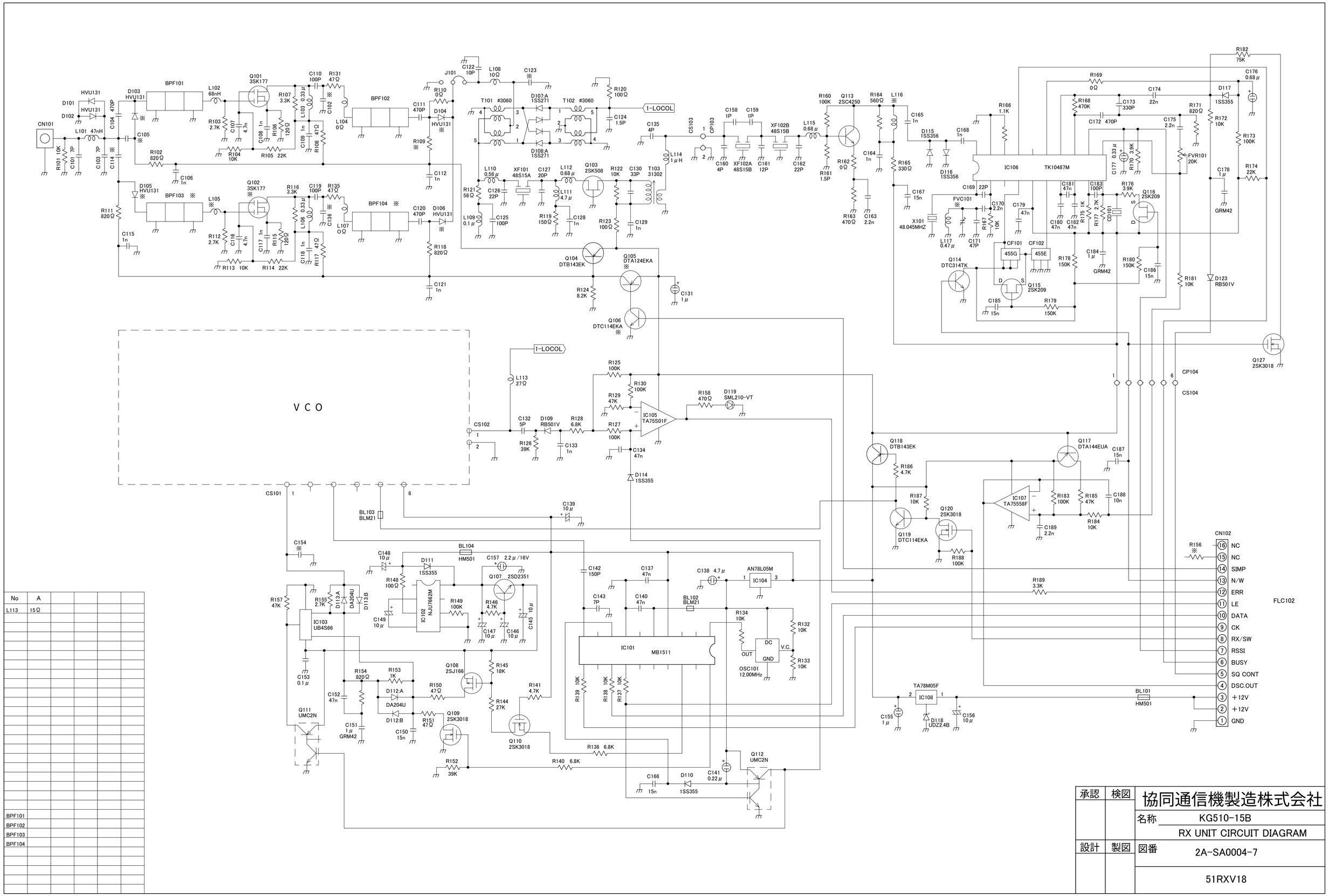

No	A				
L113	15Ω				
BPF101					
BPF102					
BPF103					
BPF104					

承認	検図	協同通信機製造株式会社
		名称 KG510-15B
		RX UNIT CIRCUIT DIAGRAM
設計	製図	図番 2A-SA0004-7
		51RXV18

51RXU86-3

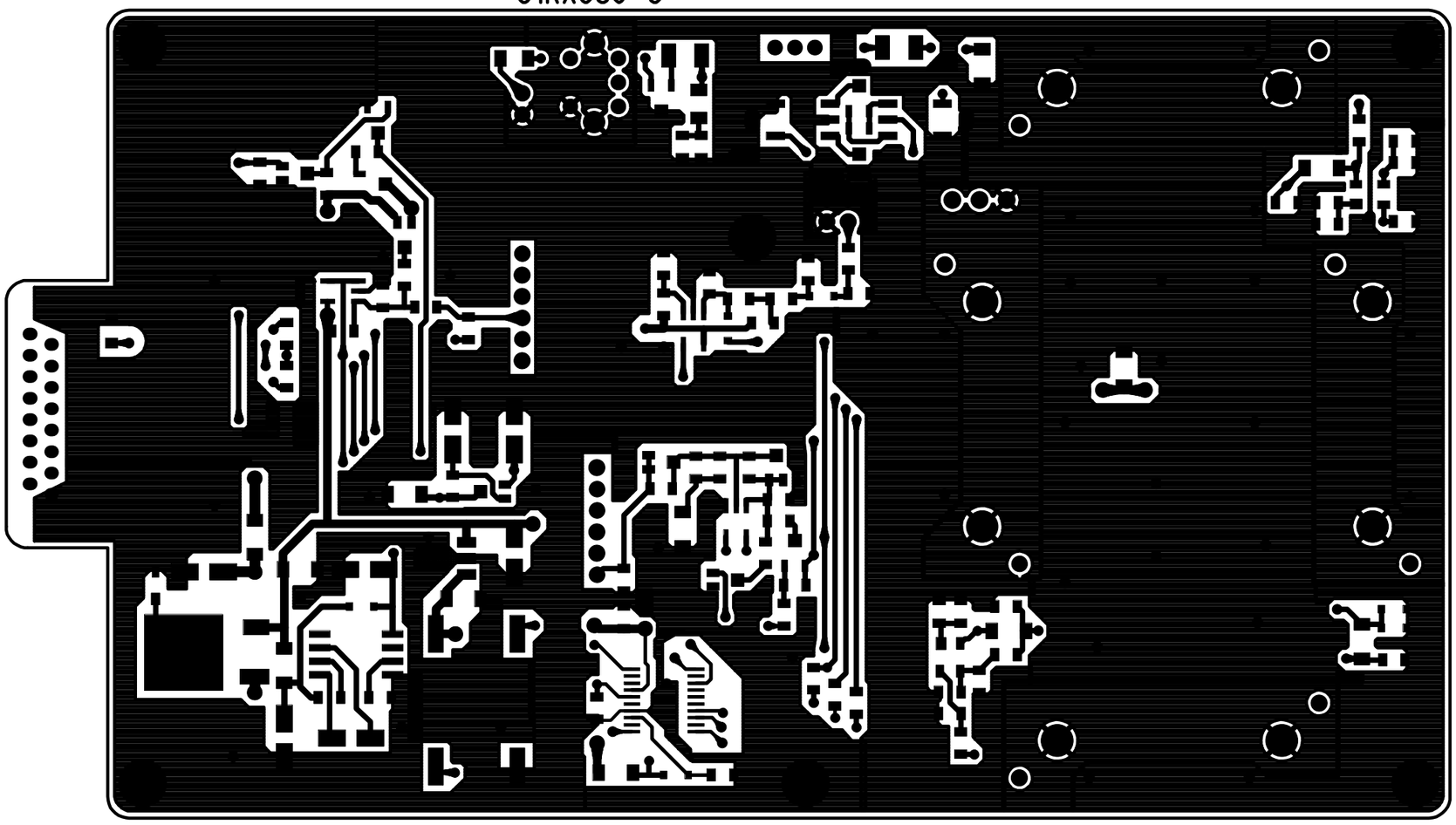

部品面　パターン

51RXU86-3

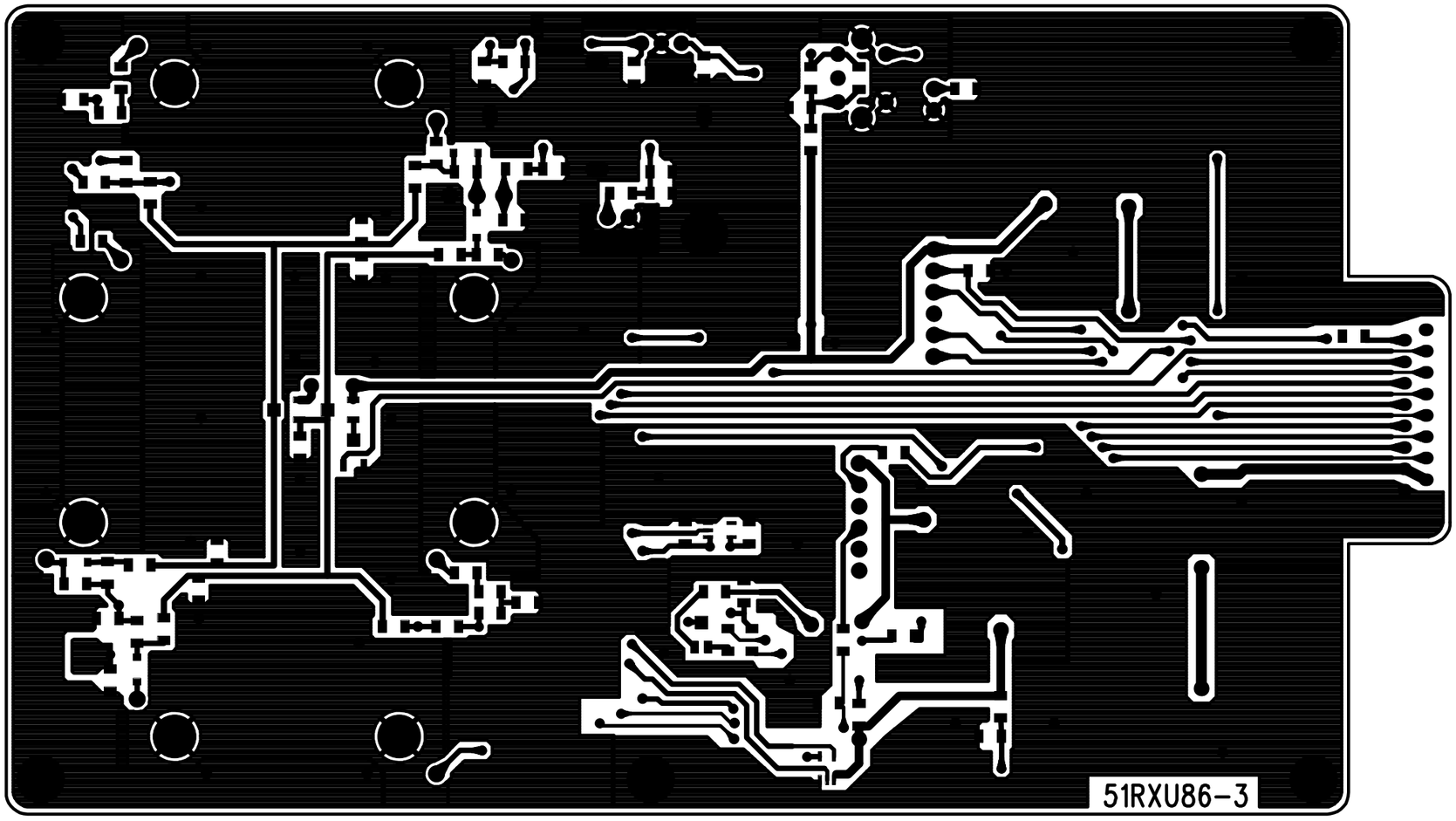

半田面　パターン

51RXU86-3

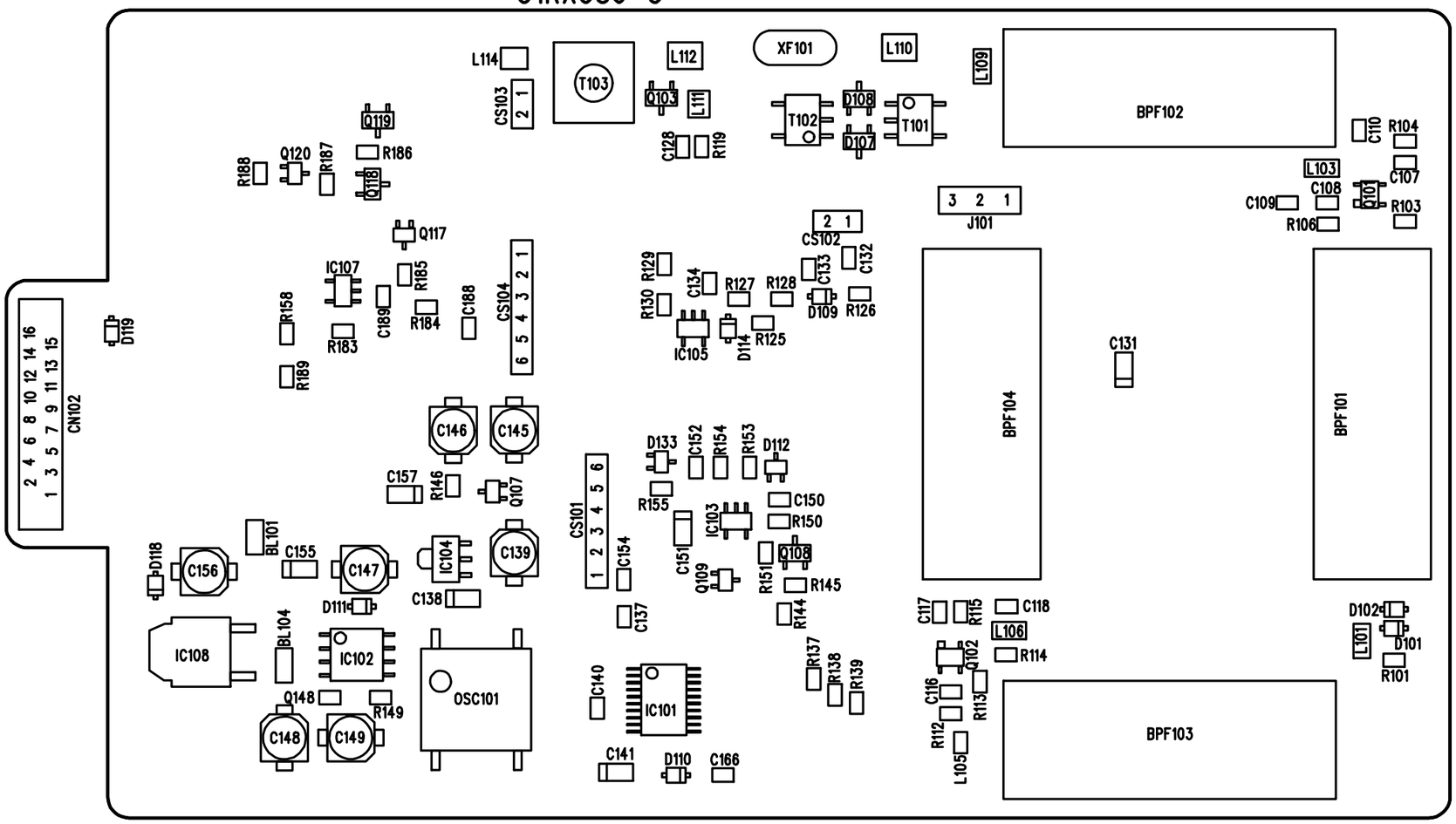
L114
CS103
T103
L112
Q103
L111
XF101
L110
L109
T102
D108
D107
T101
BPF102
C110
R104
L103
C107
C108
Q101
C109
R106
R103
Q119
R186
R188
Q120
R187
Q118
C128
R119
3 2 1
J101
2 1
CS102
Q117
IC107
R185
R129
C134
R127
R128
C133
C132
R158
C189
R184
C188
CS104
R130
D109
R126
R183
IC105
D114
R125
C131
D119
R189
BPF104
BPF101
CN102
2 4 6 8 10 12 14 16
1 3 5 7 9 11 13 15
C146
C145
D133
C152
R154
R153
D112
C157
R146
Q107
R155
C150
R150
CS101
IC103
BL101
C155
C147
IC104
C139
C151
Q108
D118
C156
C154
Q109
R151
R145
D111
C138
C137
R144
C117
R115
C118
L106
D102
L101
D101
IC108
BL104
IC102
OSC101
C140
IC101
R137
R138
R139
Q102
R114
R101
C116
R113
Q148
R149
C148
C149
R112
BPF103
C141
D110
C166
L105

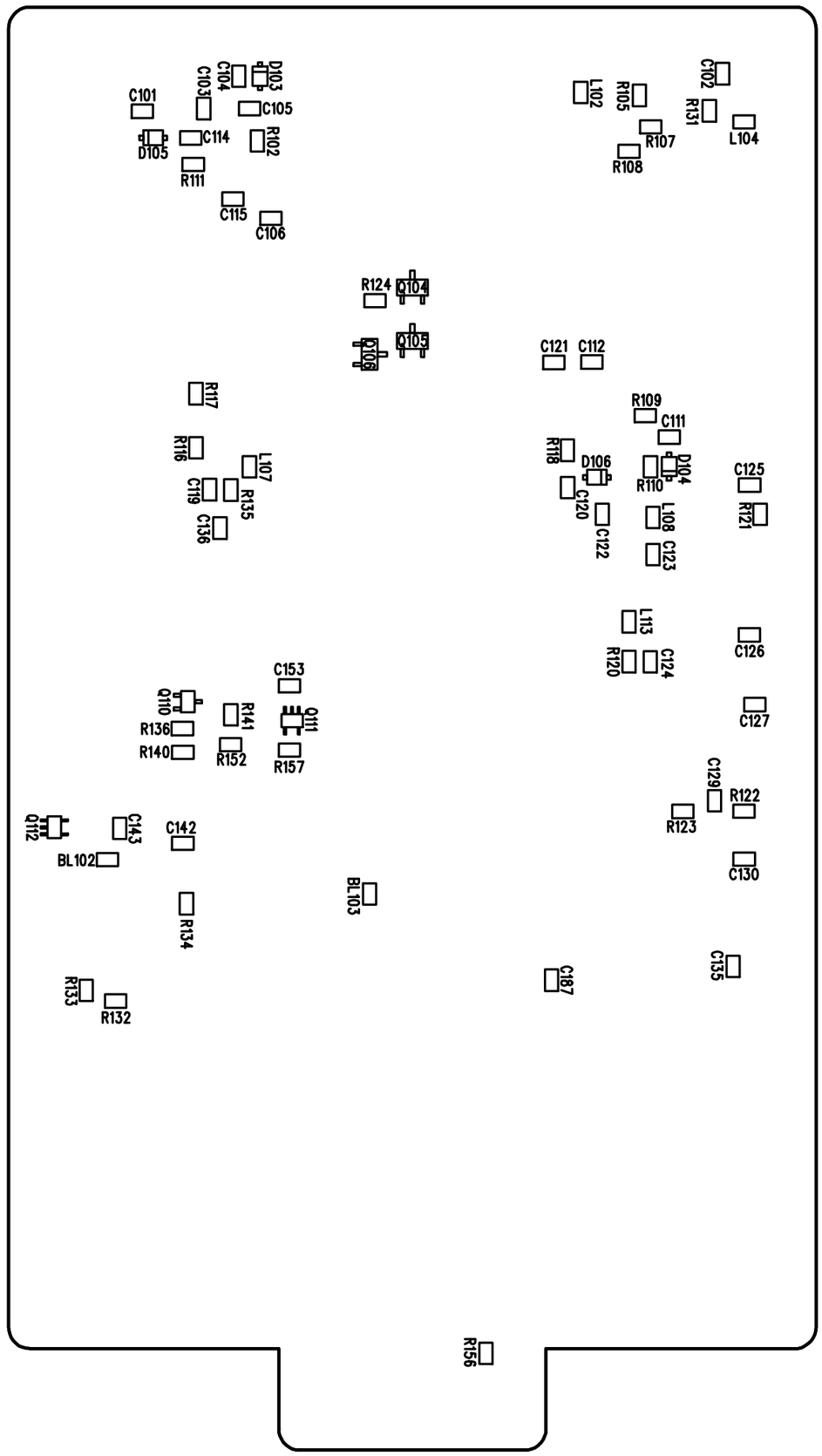
C102
R131
L104
L102
R105
R107
R108
D103
C104
C103
C101
C105
D105
C114
R102
R111
C115
C106
R124
Q104
Q105
Q106
C121
C112
R109
C111
R118
D106
D104
R110
C125
R121
C120
L108
C122
C123
R117
R116
L107
C119
R135
C136
L113
R120
C124
C126
C127
C153
Q110
R136
R140
R141
R152
Q111
R157
C129
R122
R123
Q112
C143
C142
BL102
C130
BL103
R134
C187
C135
R133
R132
R156

51RXU86-3

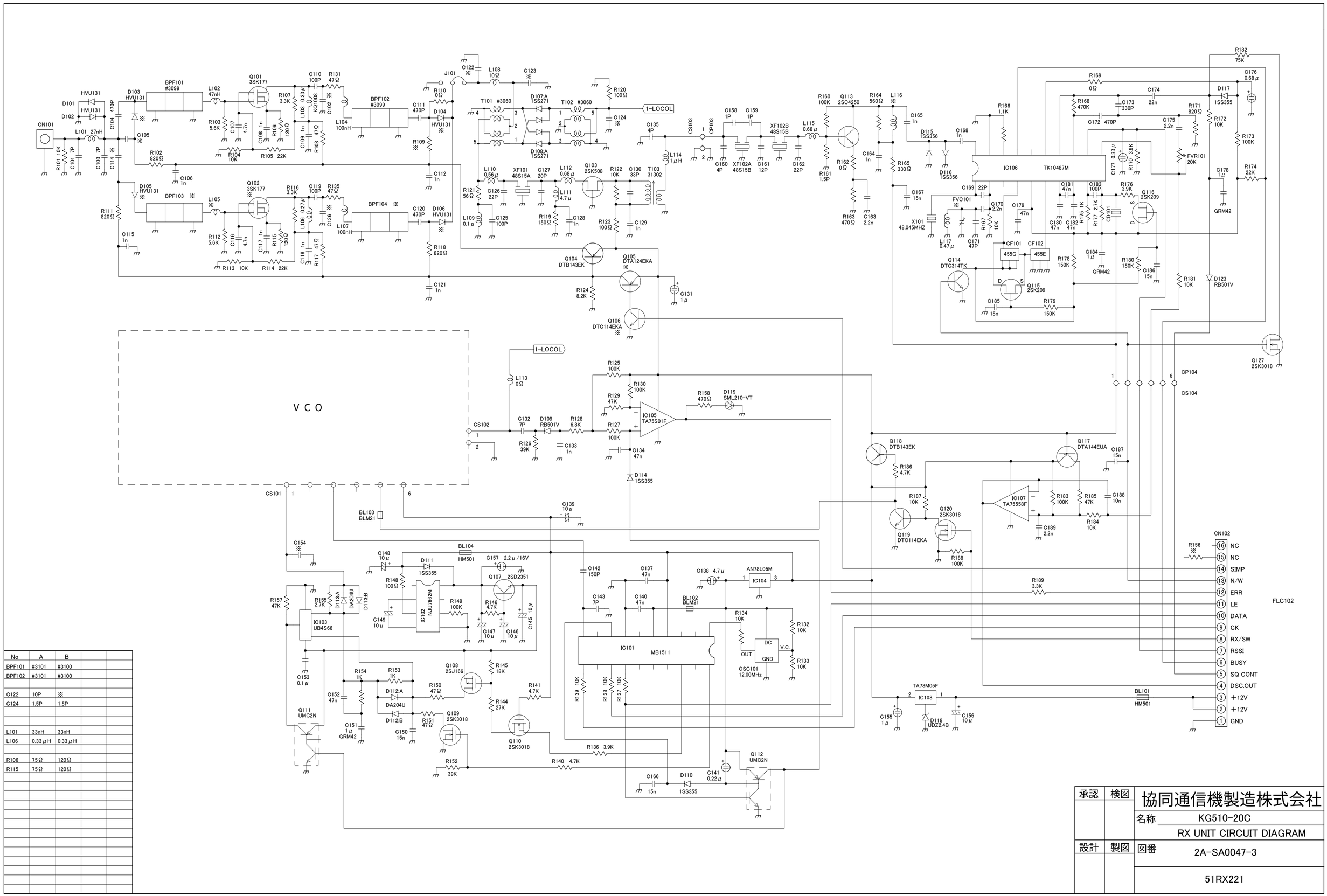

No	A	B		
BPF101	#3101	#3100		
BPF102	#3101	#3100		
C122	10P	※		
C124	1.5P	1.5P		
L101	33nH	33nH		
L106	0.33μH	0.33μH		
R106	75Ω	120Ω		
R115	75Ω	120Ω		

承認	検図	協同通信機製造株式会社
		名称 KG510-20C
		RX UNIT CIRCUIT DIAGRAM
設計	製図	図番 2A-SA0047-3
		51RX221

51RXU86-3

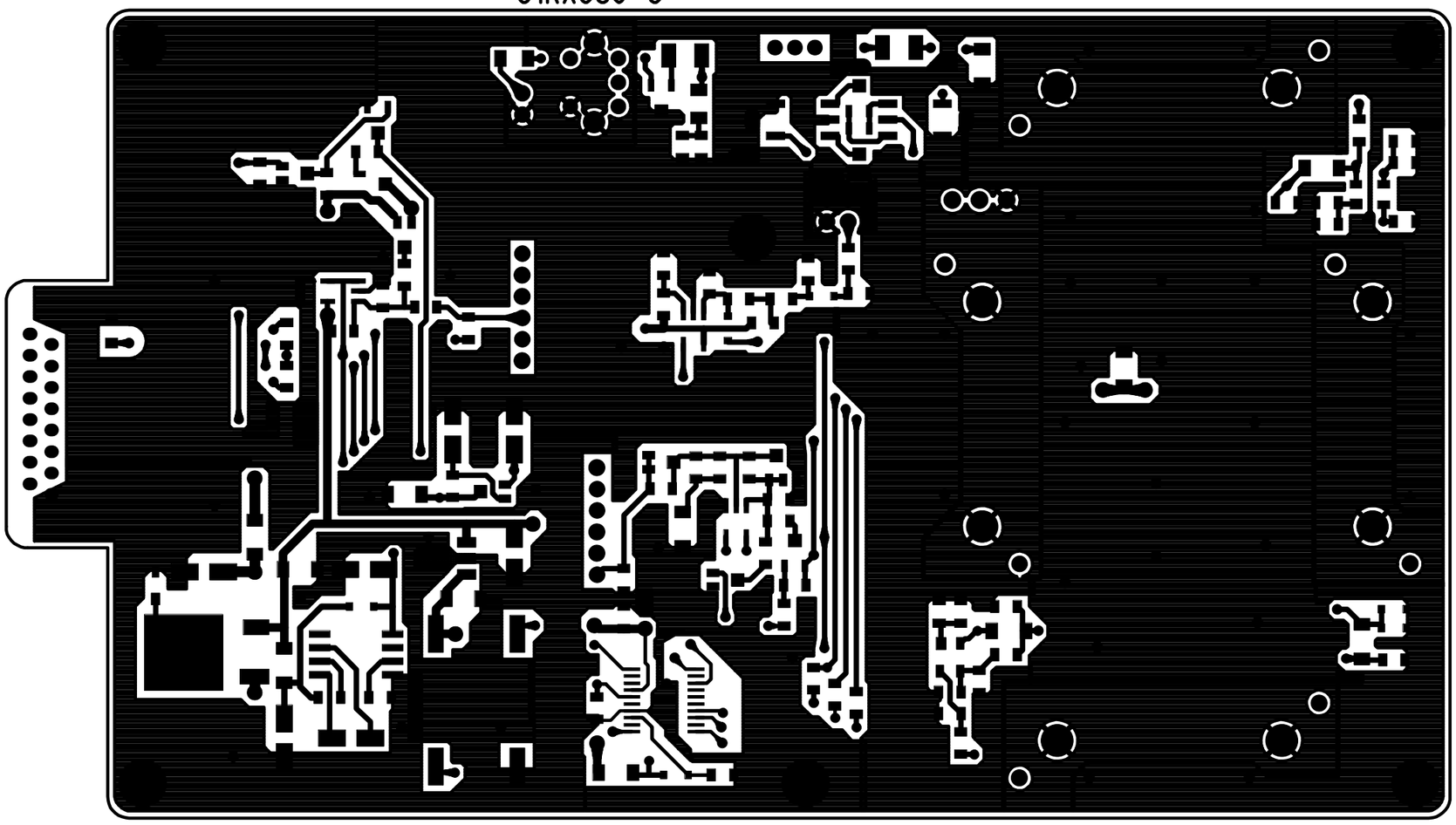

51RXU86-3

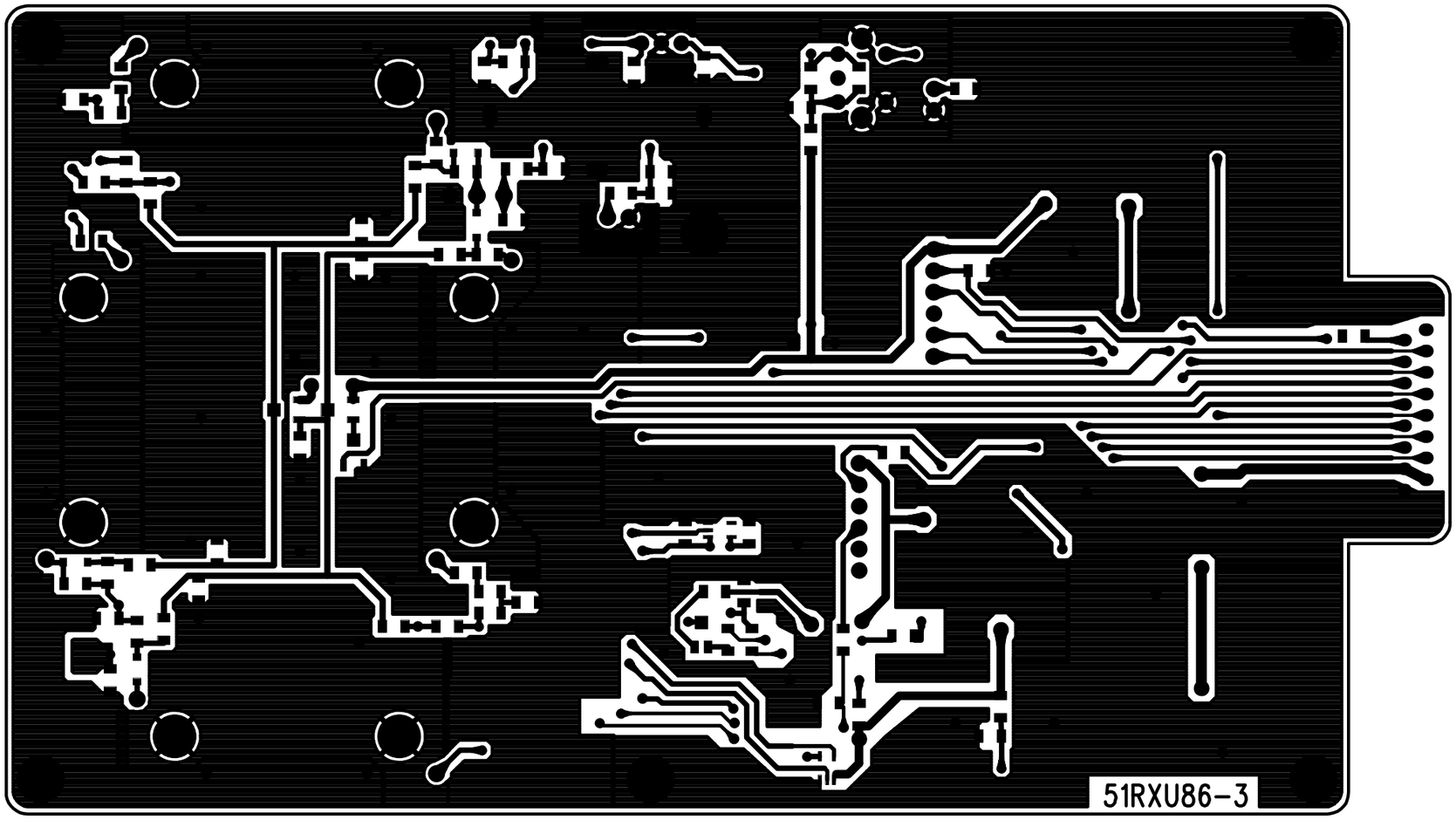

51RXU86-3

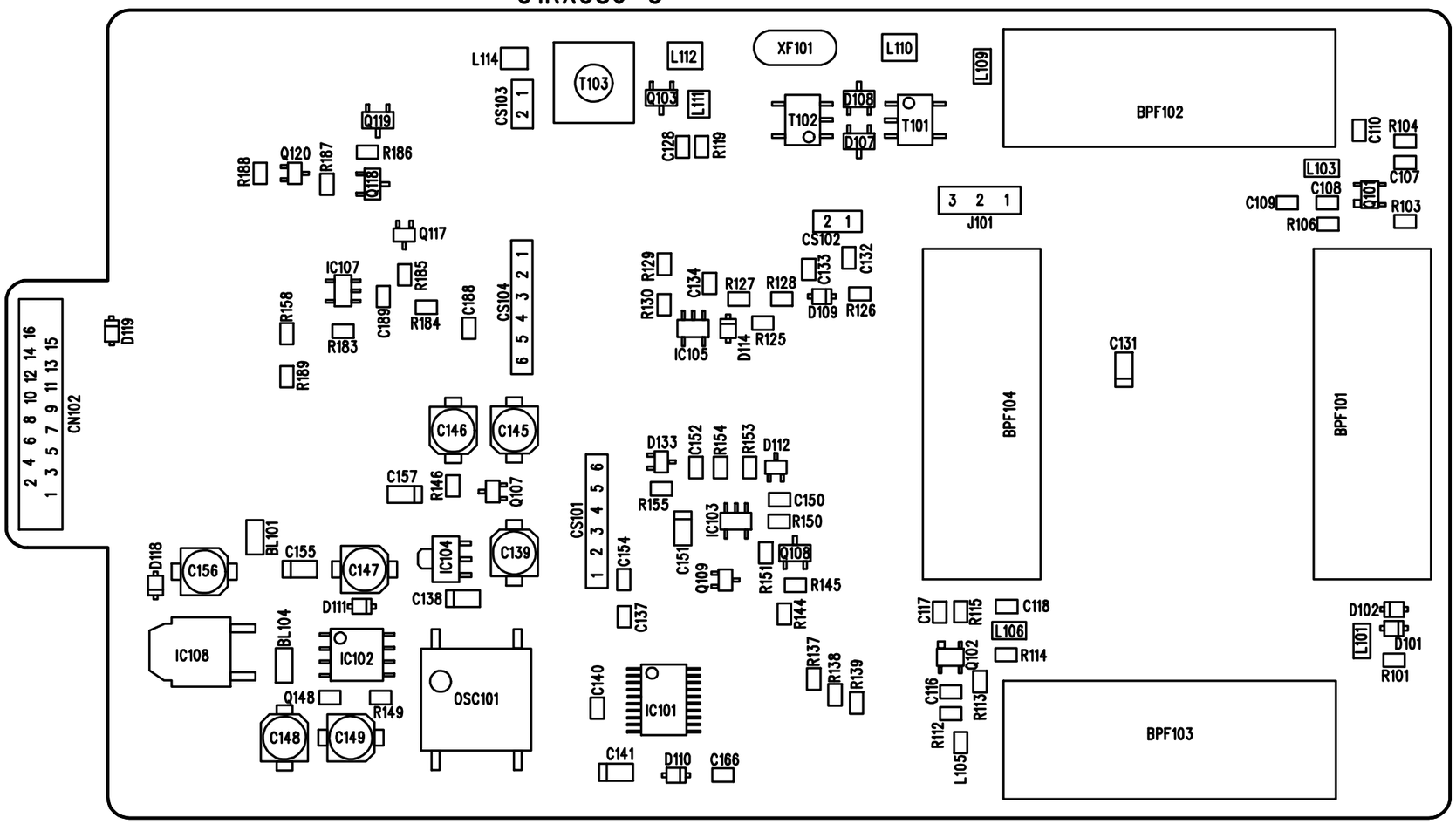
L114
CS103
T103
L112
Q103
L111
XF101
L110
L109
T102
D108
D107
T101
BPF102
C110
R104
L103
C107
C108
Q101
C109
R106
R103
Q119
R186
R188
Q120
R187
Q118
C128
R119
3 2 1
J101
2 1
CS102
Q117
IC107
R185
R129
C134
R127
R128
C133
C132
R158
C189
R184
C188
CS104
R130
D109
R126
R183
IC105
D114
R125
C131
D119
R189
BPF104
BPF101
CN102
2 4 6 8 10 12 14 16
1 3 5 7 9 11 13 15
C146
C145
D133
C152
R154
R153
D112
C157
R146
Q107
R155
C150
R150
CS101
IC103
BL101
C155
C147
IC104
C139
C151
Q108
D118
C156
C154
Q109
R151
R145
D111
C138
C137
R144
C117
R115
C118
L106
D102
L101
D101
IC108
BL104
IC102
OSC101
C140
IC101
R137
R138
R139
Q102
R114
R101
C116
R113
Q148
R149
C148
C149
R112
BPF103
C141
D110
C166
L105

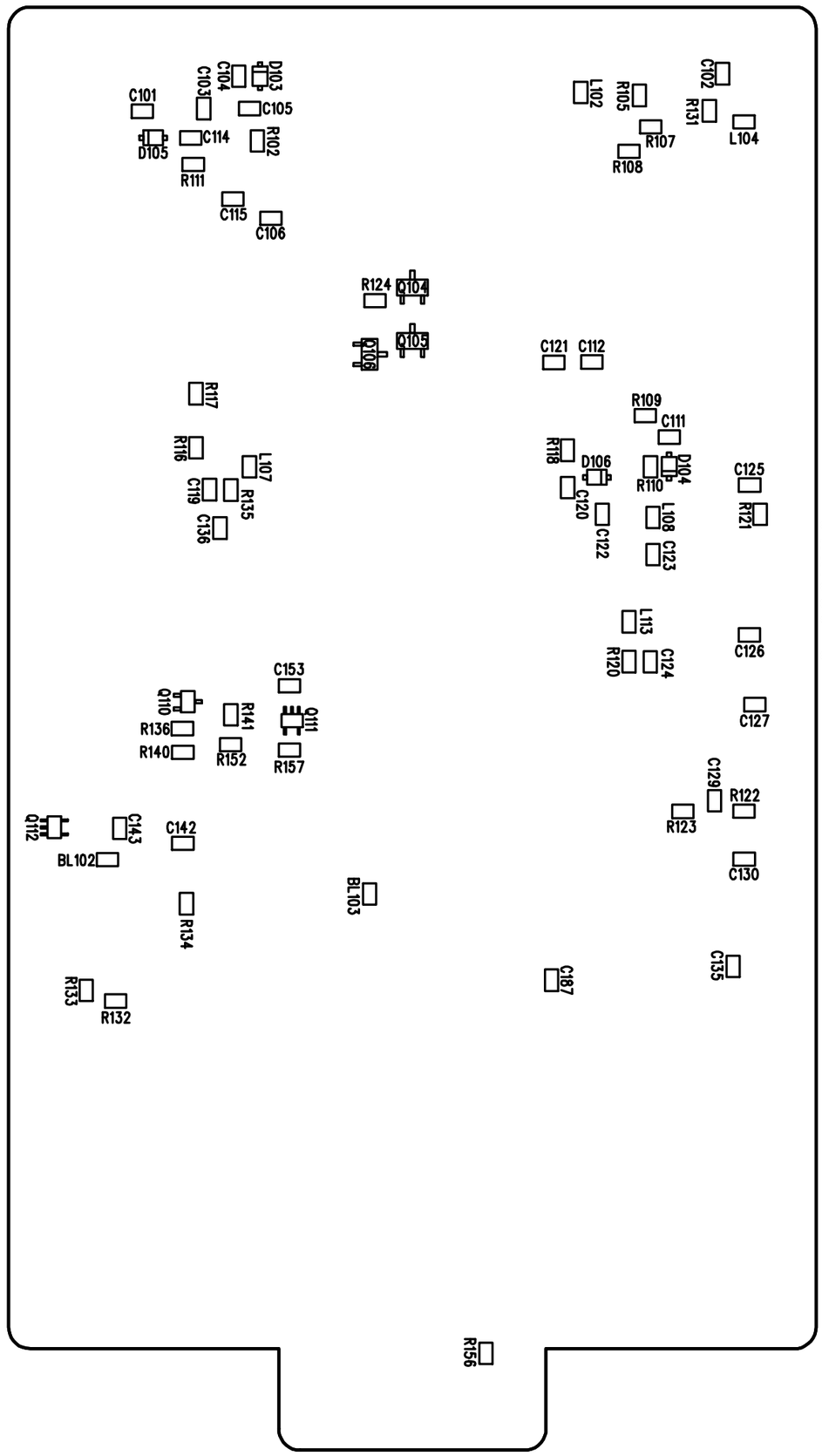
C102
R131
L104
L102
R105
R107
R108
D103
C104
C103
C101
C105
D105
C114
R102
R111
C115
C106
R124
Q104
Q105
Q106
C121
C112
R109
C111
R118
D106
D104
R110
C125
R121
C120
L108
C122
C123
R117
R116
L107
C119
R135
C136
L113
R120
C124
C126
C127
C153
Q110
R136
R140
R141
R152
Q111
R157
C129
R122
R123
Q112
C143
C142
BL102
C130
BL103
R134
C187
C135
R133
R132
R156

51RXU86-3

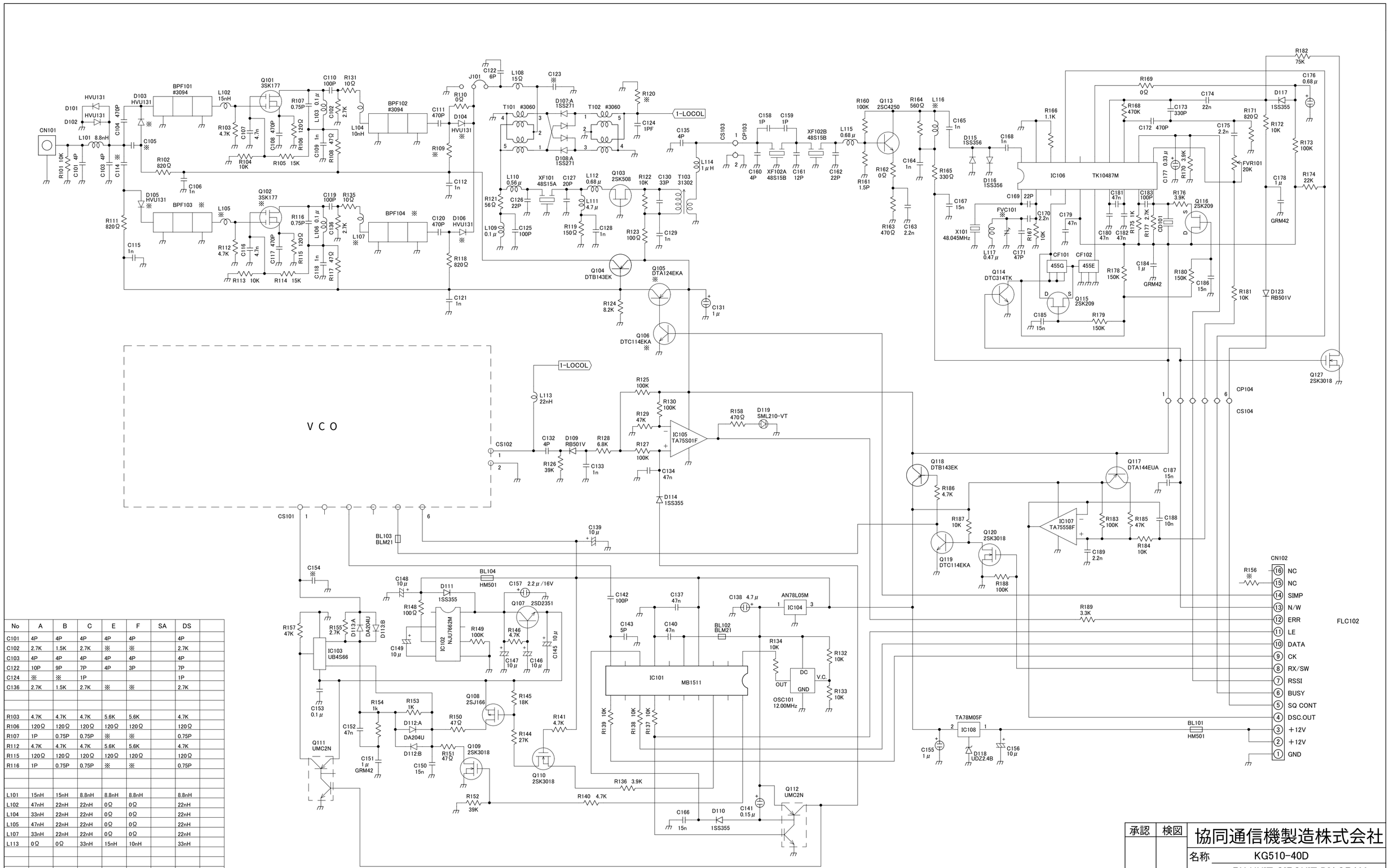

No	A	B	C	E	F	SA	DS	
C101	4P	4P	4P	4P	4P		4P	
C102	2.7K	1.5K	2.7K	※	※		2.7K	
C103	4P	4P	4P	4P	4P		4P	
C122	10P	9P	7P	4P	3P		7P	
C124	※	※	1P				1P	
C136	2.7K	1.5K	2.7K	※	※		2.7K	
R103	4.7K	4.7K	4.7K	5.6K	5.6K		4.7K	
R106	120Ω	120Ω	120Ω	120Ω	120Ω		120Ω	
R107	1P	0.75P	0.75P	※	※		0.75P	
R112	4.7K	4.7K	4.7K	5.6K	5.6K		4.7K	
R115	120Ω	120Ω	120Ω	120Ω	120Ω		120Ω	
R116	1P	0.75P	0.75P	※	※		0.75P	
L101	15nH	15nH	8.8nH	8.8nH	8.8nH		8.8nH	
L102	47nH	22nH	22nH	0Ω	0Ω		22nH	
L104	33nH	22nH	22nH	0Ω	0Ω		22nH	
L105	47nH	22nH	22nH	0Ω	0Ω		22nH	
L107	33nH	22nH	22nH	0Ω	0Ω		22nH	
L113	0Ω	0Ω	33nH	15nH	10nH		33nH	
BPF101	#3097	#3096	#3095	#3093	#3098		#3102	
BPF102	#3097	#3096	#3095	#3093	#3098		#3102	
BPF103	#3097	#3096	#3095	#3093	#3098		#3102	
BPF104	#3097	#3096	#3095	#3093	#3098		#3102	

承認	検図	協同通信機製造株式会社
		名称 KG510-40D
		RX UNIT CIRCUIT DIAGRAM
設計	製図	図番 2A-SA0003-7
		51RXU21

51RXU86-3

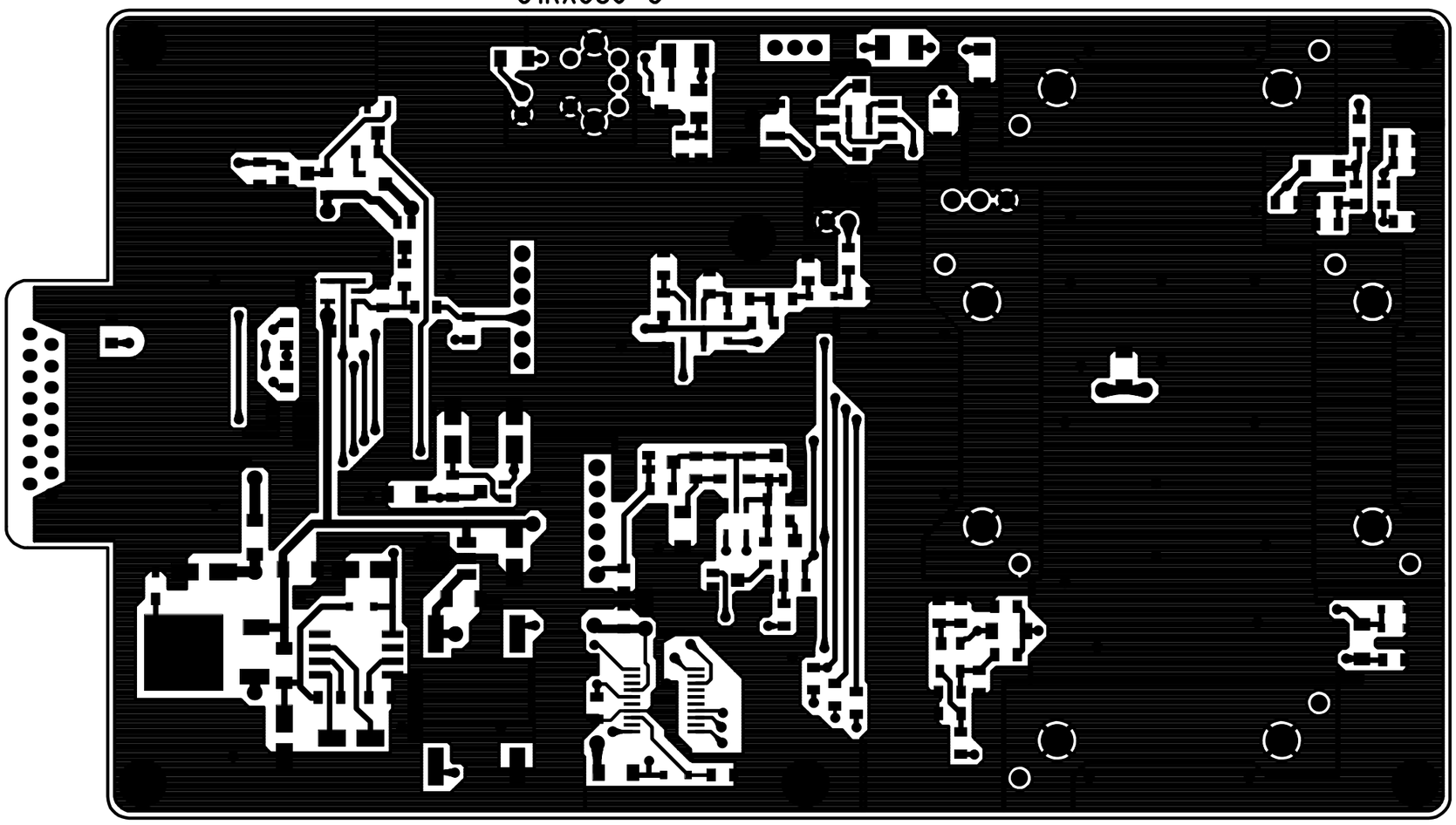

部品面　パターン

51RXU86-3

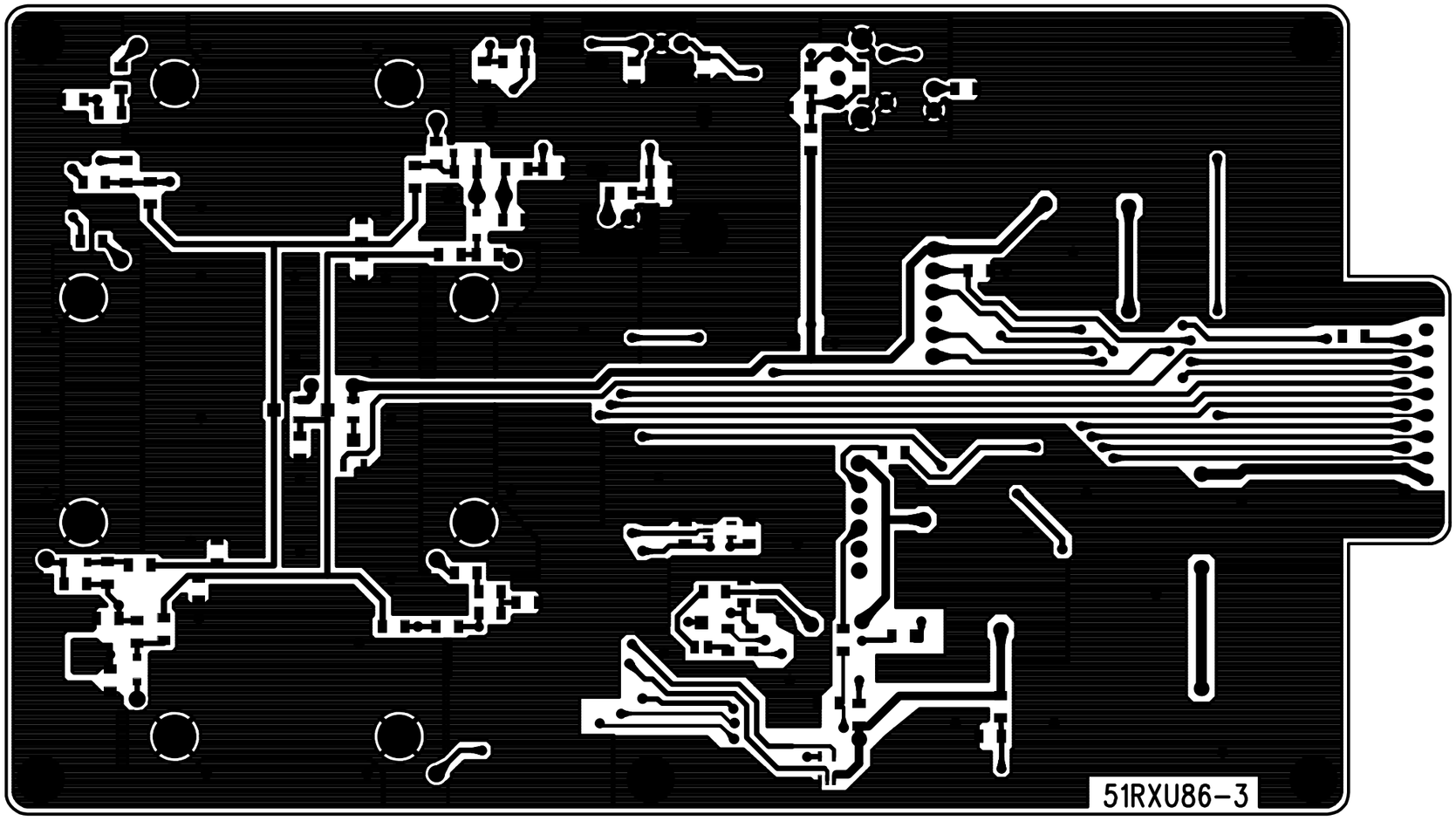

半田面　パターン

51RXU86-3

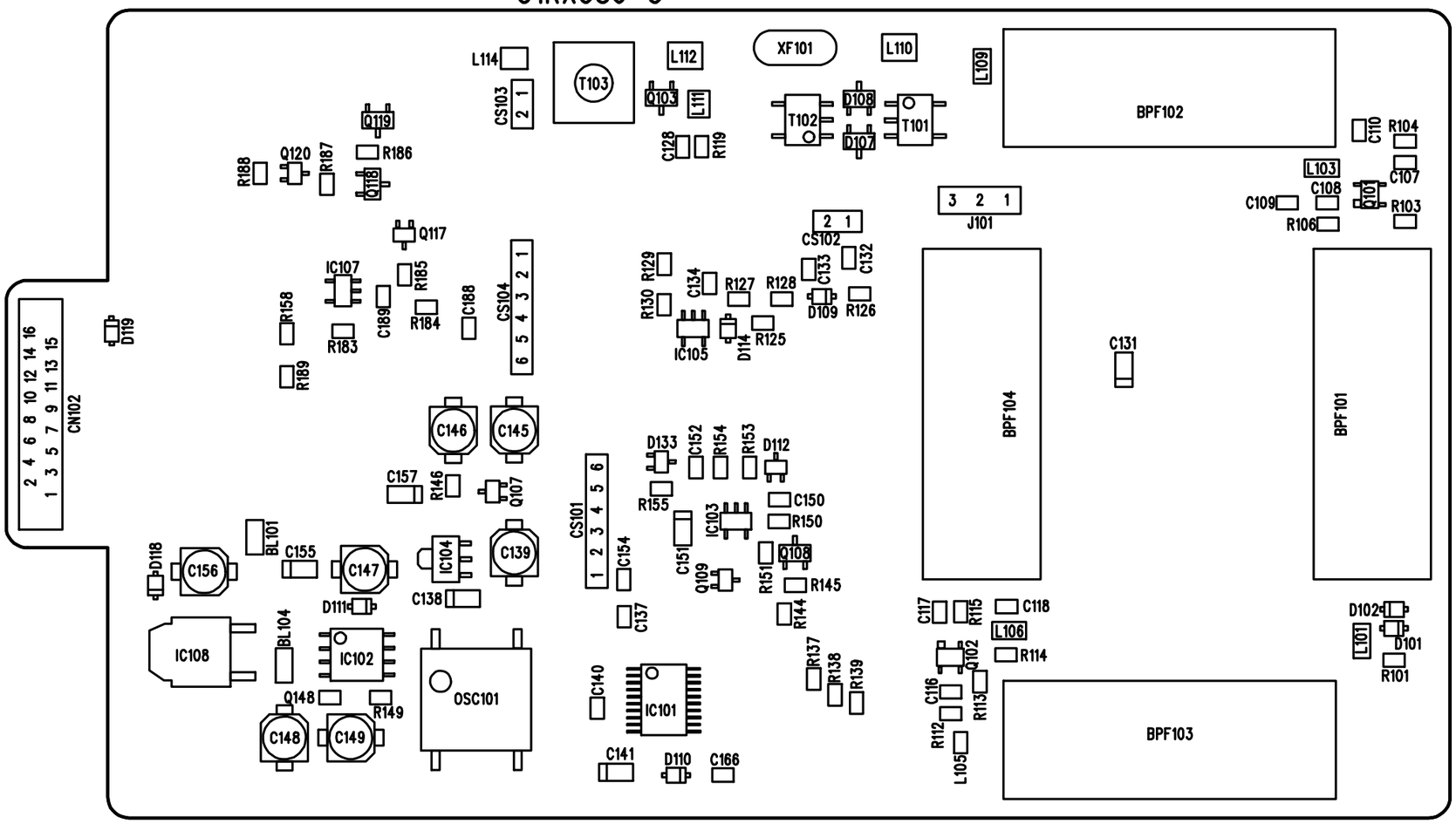
L114
CS103
T103
L112
Q103
L111
XF101
L110
L109
T102
D108
D107
T101
BPF102
C110
R104
L103
C107
C108
Q101
C109
R106
R103
Q119
R186
R188
Q120
R187
Q118
C128
R119
3 2 1
J101
2 1
CS102
Q117
IC107
R185
R129
C134
R127
R128
C133
C132
R158
C189
R184
C188
CS104
R130
D109
R126
R183
IC105
D114
R125
C131
D119
R189
BPF104
BPF101
CN102
2 4 6 8 10 12 14 16
1 3 5 7 9 11 13 15
C146
C145
D133
C152
R154
R153
D112
C157
R146
Q107
R155
C150
R150
CS101
IC103
BL101
C155
C147
IC104
C139
C151
Q108
D118
C156
C154
Q109
R151
R145
D111
C138
C137
R144
C117
R115
C118
L106
D102
L101
D101
IC108
BL104
IC102
OSC101
C140
IC101
R137
R138
R139
Q102
R114
R101
C116
R113
Q148
R149
C148
C149
R112
BPF103
C141
D110
C166
L105

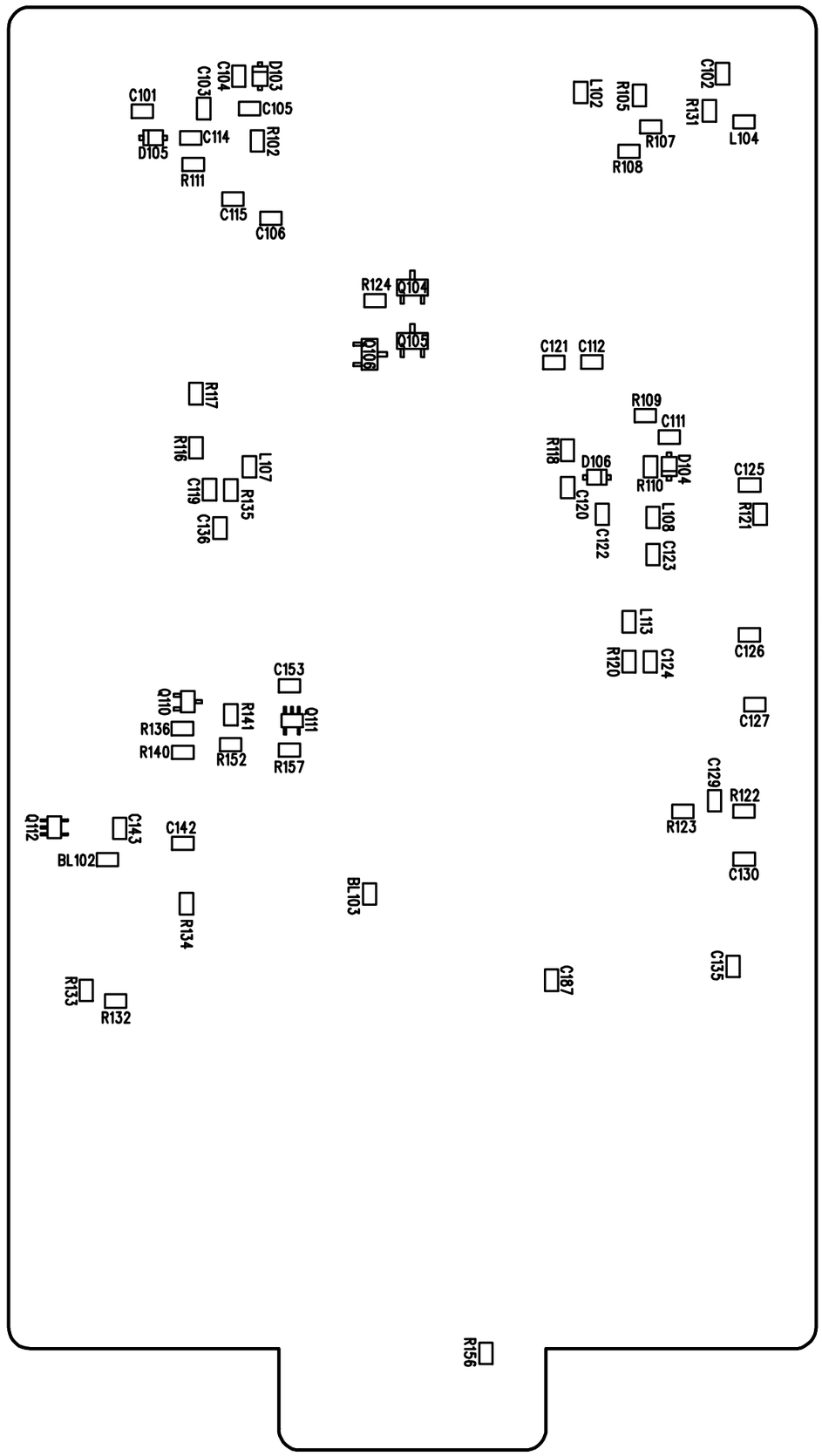
C102
R131
L104
L102
R105
R107
R108
D103
C104
C103
C101
C105
D105
C114
R102
R111
C115
C106
R124
Q104
Q105
Q106
C121
C112
R109
C111
R118
D106
D104
R110
C125
R121
C120
L108
C122
C123
R117
R116
L107
C119
R135
C136
L113
R120
C124
C126
C127
C153
Q110
R136
R140
R141
R152
Q111
R157
C129
R122
R123
Q112
C143
C142
BL102
C130
BL103
R134
C187
C135
R133
R132
R156

51RXU86-3

51IF86-2

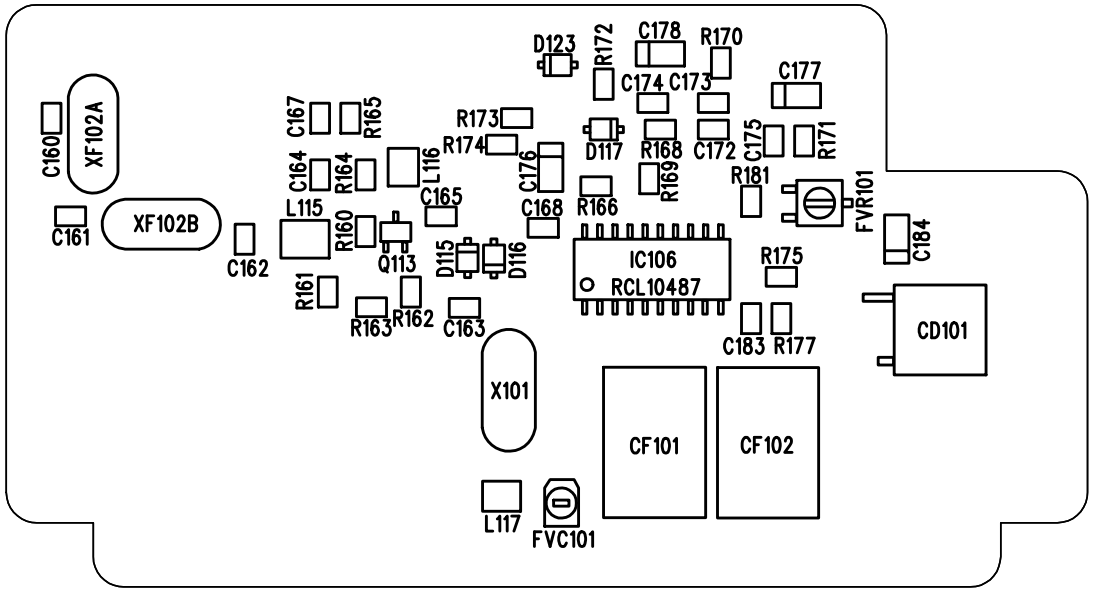
D123
R172
C178
R170
C174
C173
C177
C167
R165
R173
R174
D117
R168
C172
C175
R171
C160
XF102A
C164
R164
L116
C176
R169
R181
FVR101
C165
C168
R166
C161
XF102B
L115
R160
Q113
D115
D116
IC106
RCL10487
R175
C184
C162
R161
R163
R162
C163
C183
R177
CD101
X101
CF101
CF102
L117
FVC101

51IF86-2

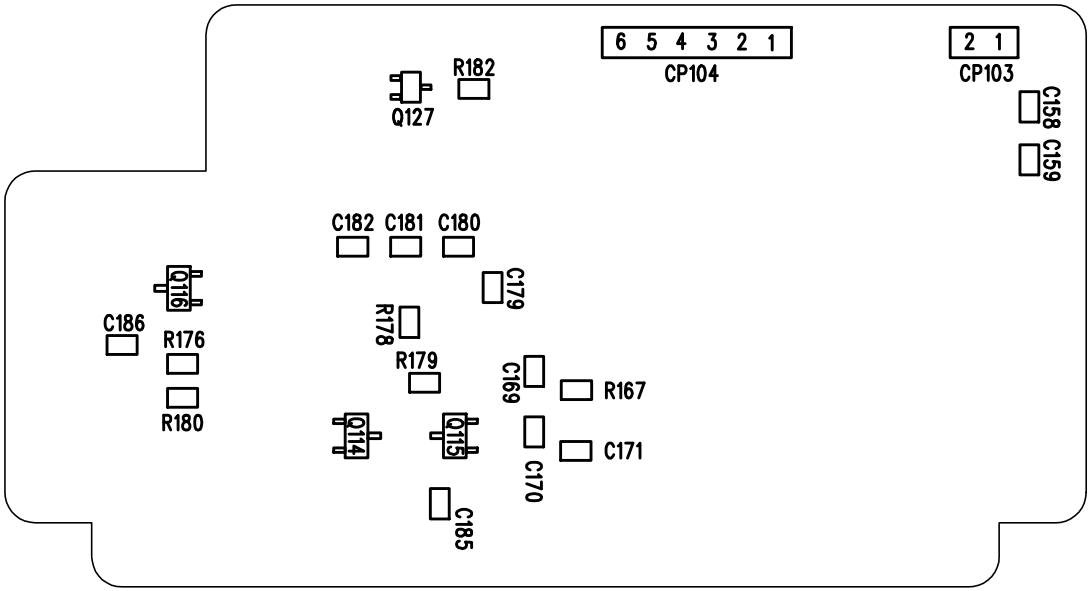
6 5 4 3 2 1
CP104
2 1
CP103
R182
Q127
C158
C159
C182
C181
C180
C179
Q116
C186
R176
R178
R179
C169
R167
R180
Q114
Q115
C170
C171
C185

51IF86-2

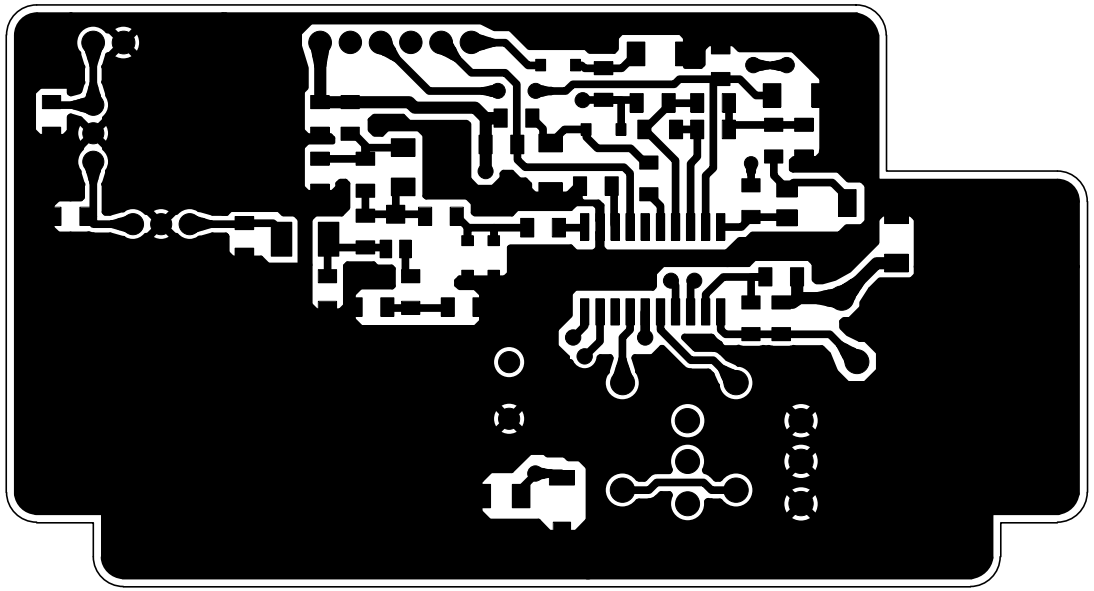

51IF86-2

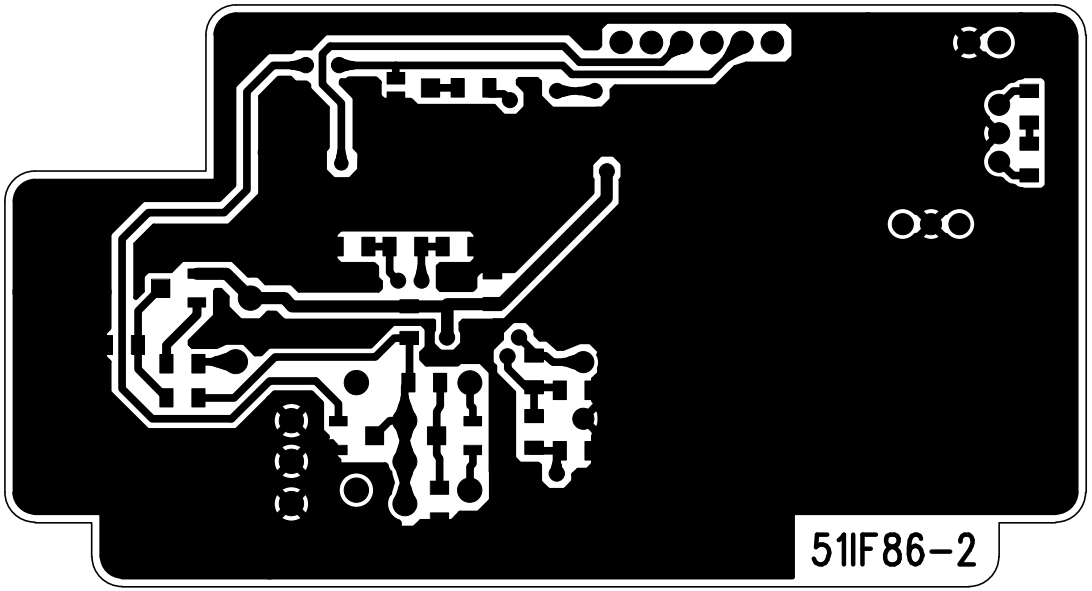

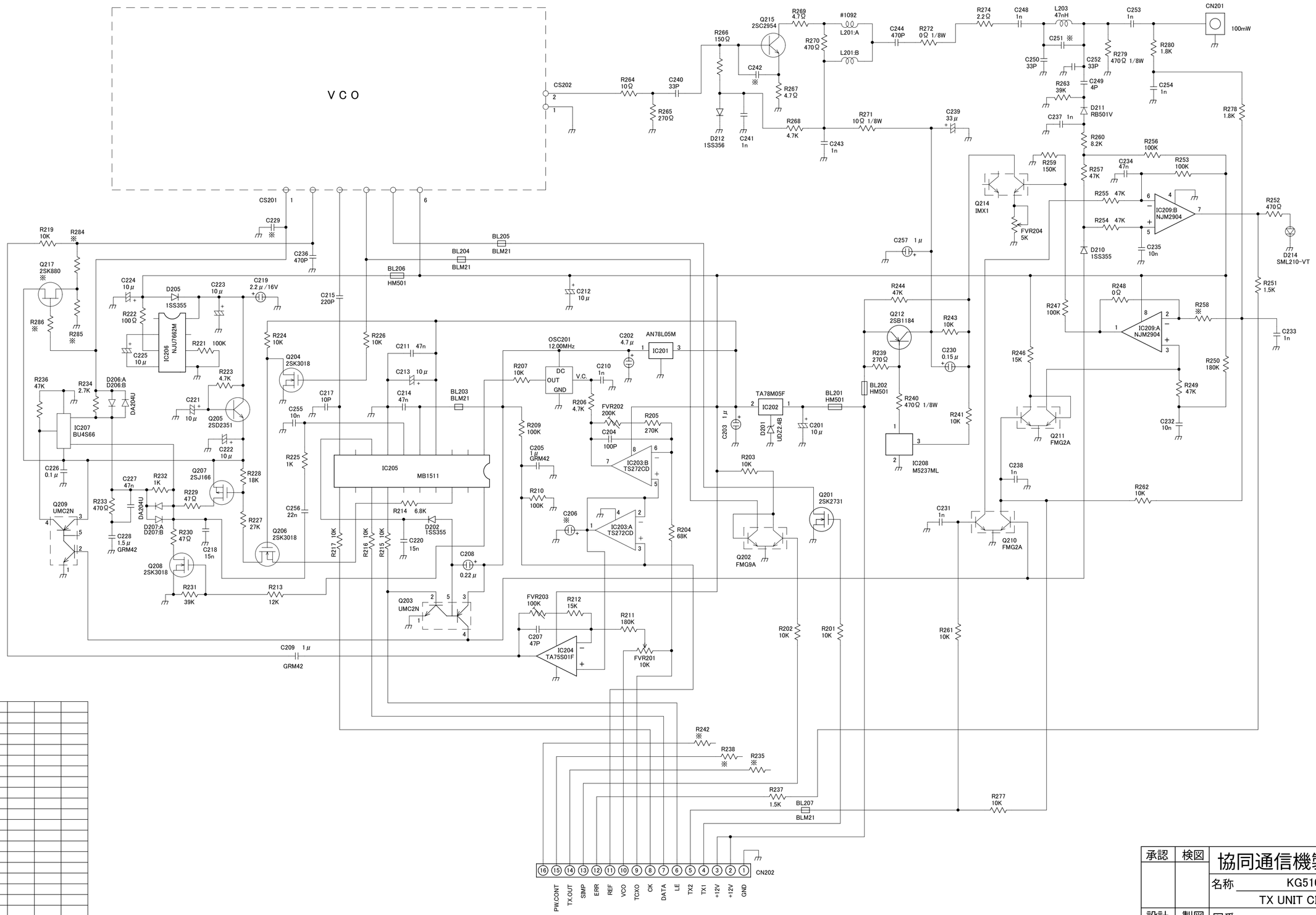

No					

承認	検図	協同通信機製造株式会社
		名称 KG510-08
		TX UNIT CIRCUIT DIAGRAM
設計	製図	図番 2A-SA0038-3
		51TX818

51TXU86-4

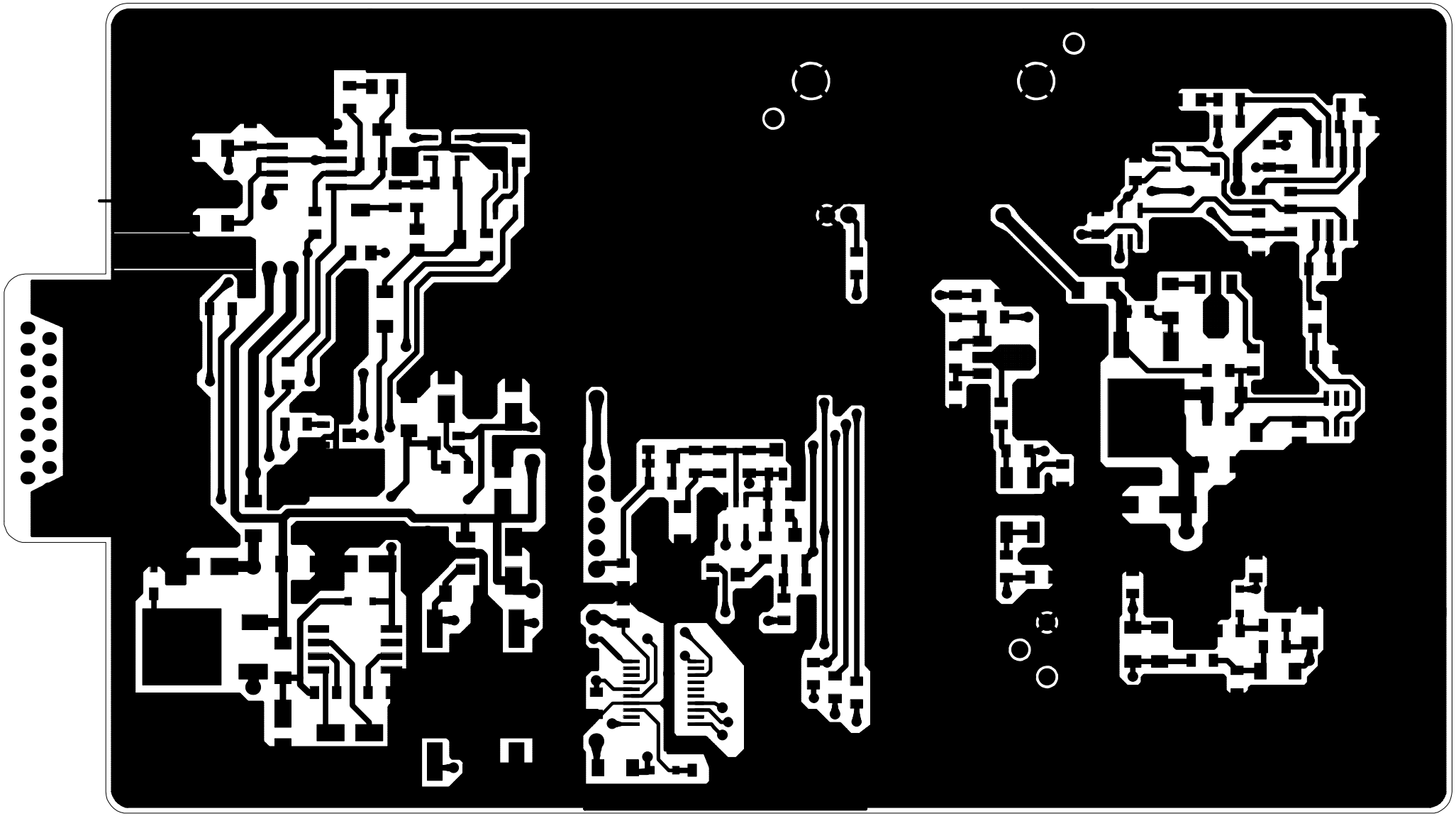

51TXU86-4

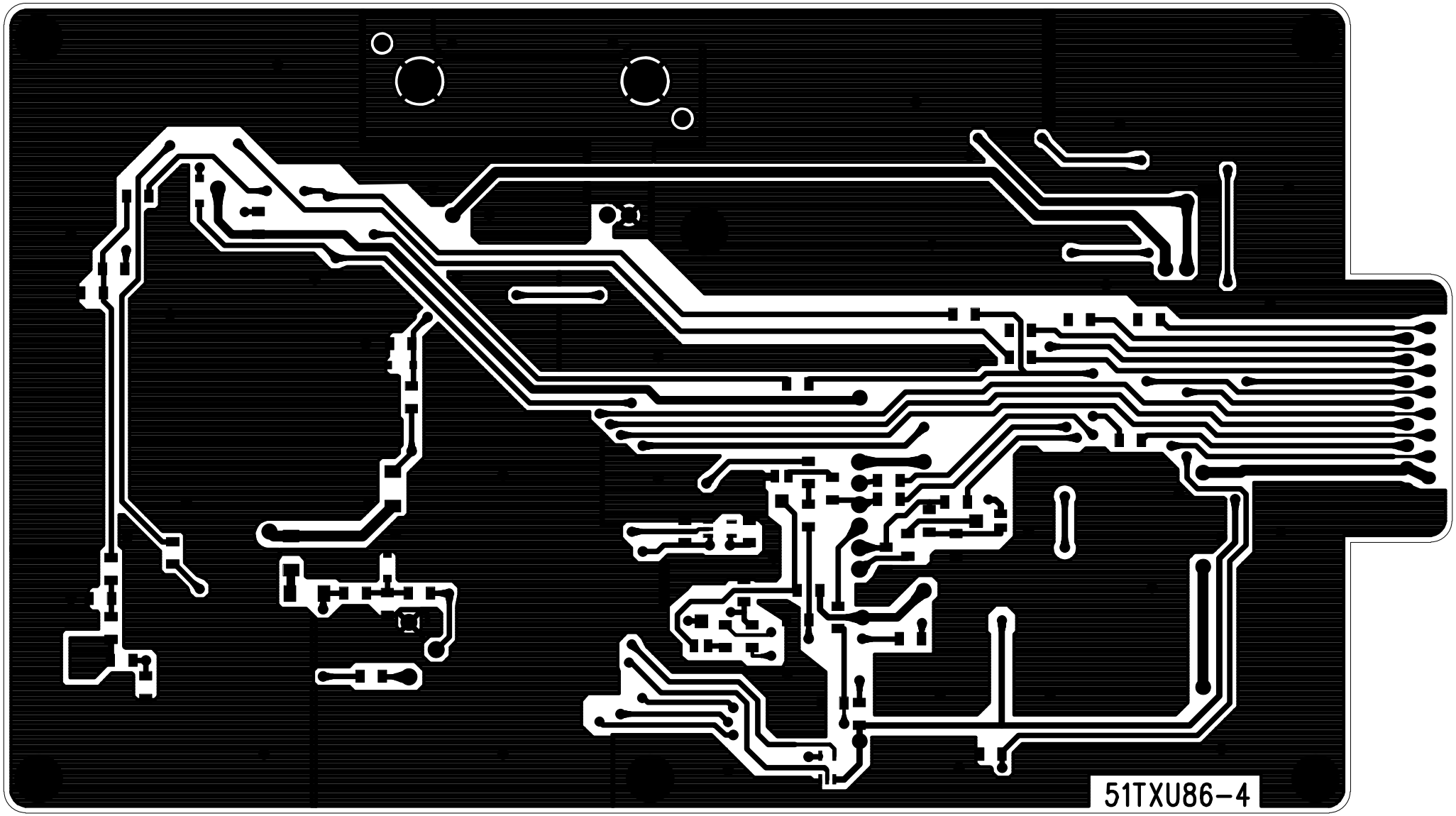

51TXU86-4

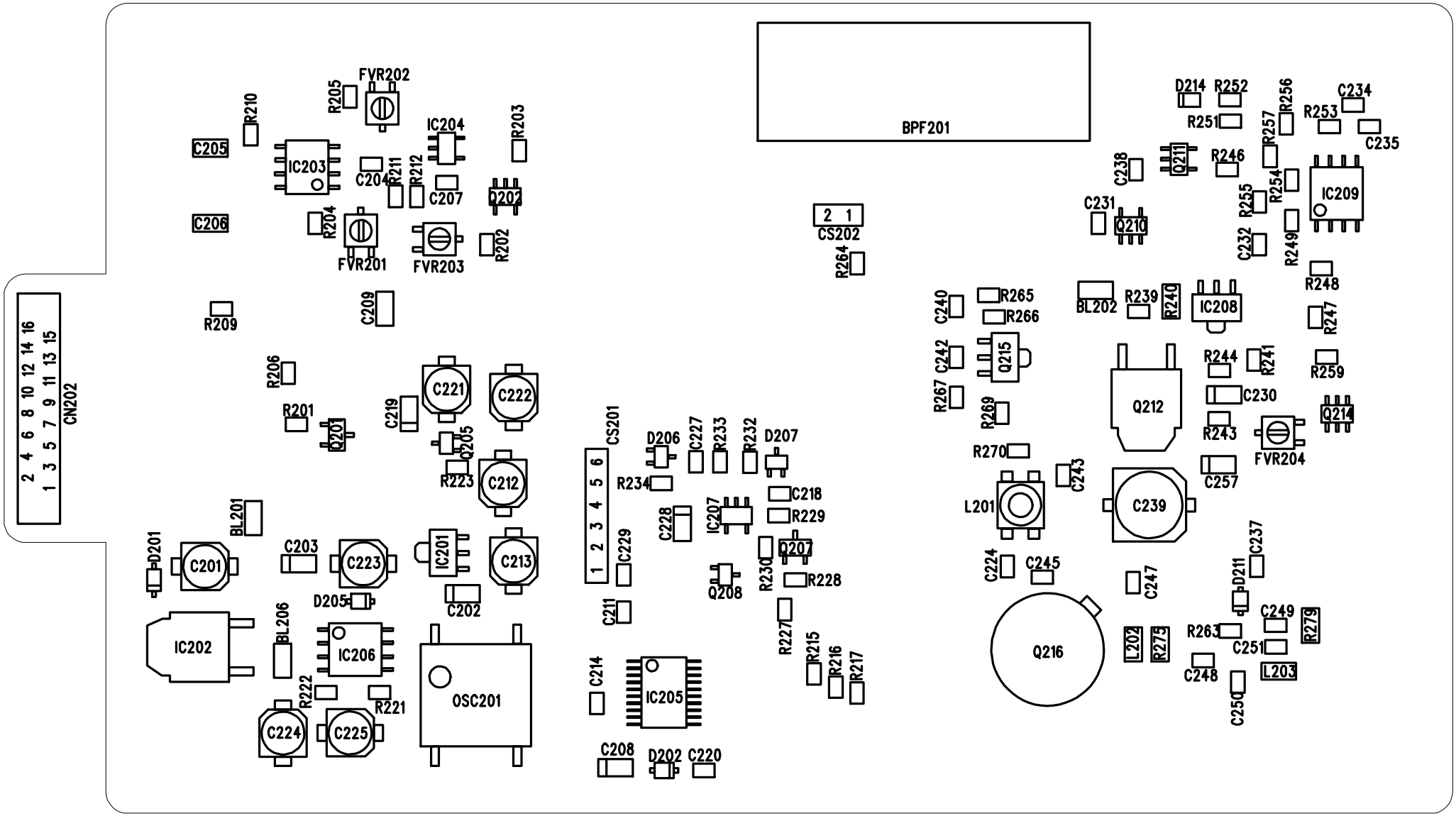
BPF201
R210
C205
IC203
R205
FVR202
IC204
R203
C204
R211
R212
C207
Q202
C206
R204
FVR201
FVR203
R202
2 1
CS202
R264
D214
R252
R256
C234
R253
R251
C235
R257
Q211
R246
C238
IC209
R254
C231
Q210
R255
C232
R249
R248
CN202
2 4 6 8 10 12 14 16
1 3 5 7 9 11 13 15
R209
C209
C240
R265
R266
BL202
R239
R240
IC208
R247
C242
Q215
R244
R241
R259
R206
C221
C222
R267
Q212
C230
R201
C219
Q201
Q205
R269
R243
Q214
FVR204
CS201
D206
C227
R233
R232
D207
R270
R223
C212
6 5 4 3 2 1
R234
C243
C257
C218
L201
C239
C228
IC207
R229
BL201
C203
C223
C213
IC201
Q207
C224
C245
C237
D201
C201
C229
R230
R228
C247
D211
Q208
D205
C202
C211
C249
R279
BL206
IC202
IC206
Q216
R263
L202
R275
C251
R227
R215
R216
R217
L203
C248
C214
IC205
R222
R221
OSC201
C250
C224
C225
C208
D202
C220

51TXU86-4

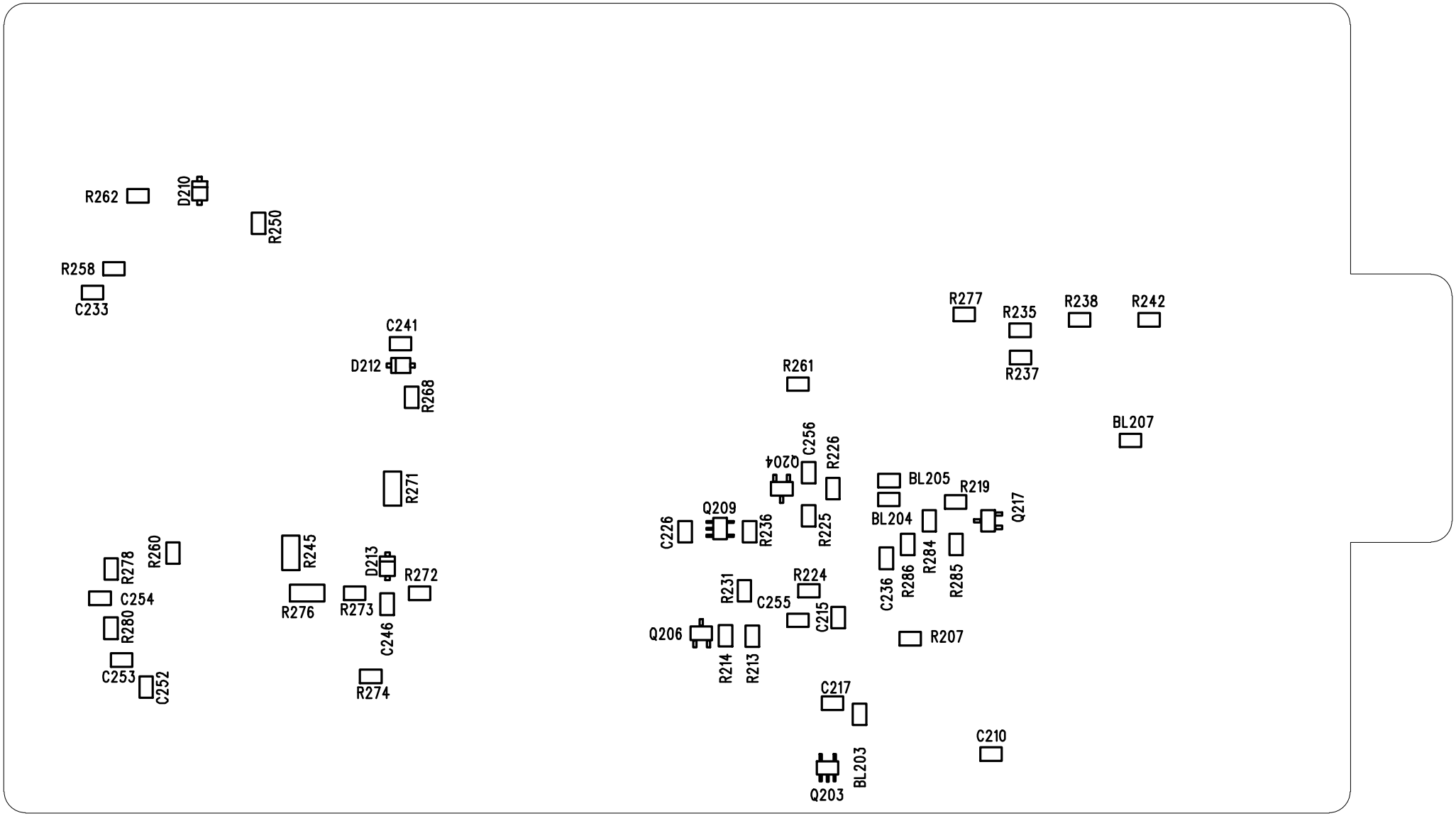
R262
D210
R250
R258
C233
C241
D212
R268
R271
R260
R278
C254
R280
C253
C252
R245
R276
D213
R273
R272
C246
R274
R277
R235
R238
R242
R237
R261
BL207
C256
Q204
R226
BL205
R219
Q217
Q209
C226
R236
R225
BL204
R284
R285
C236
R286
R231
R224
C255
C215
Q206
R214
R213
R207
C217
C210
BL203
Q203

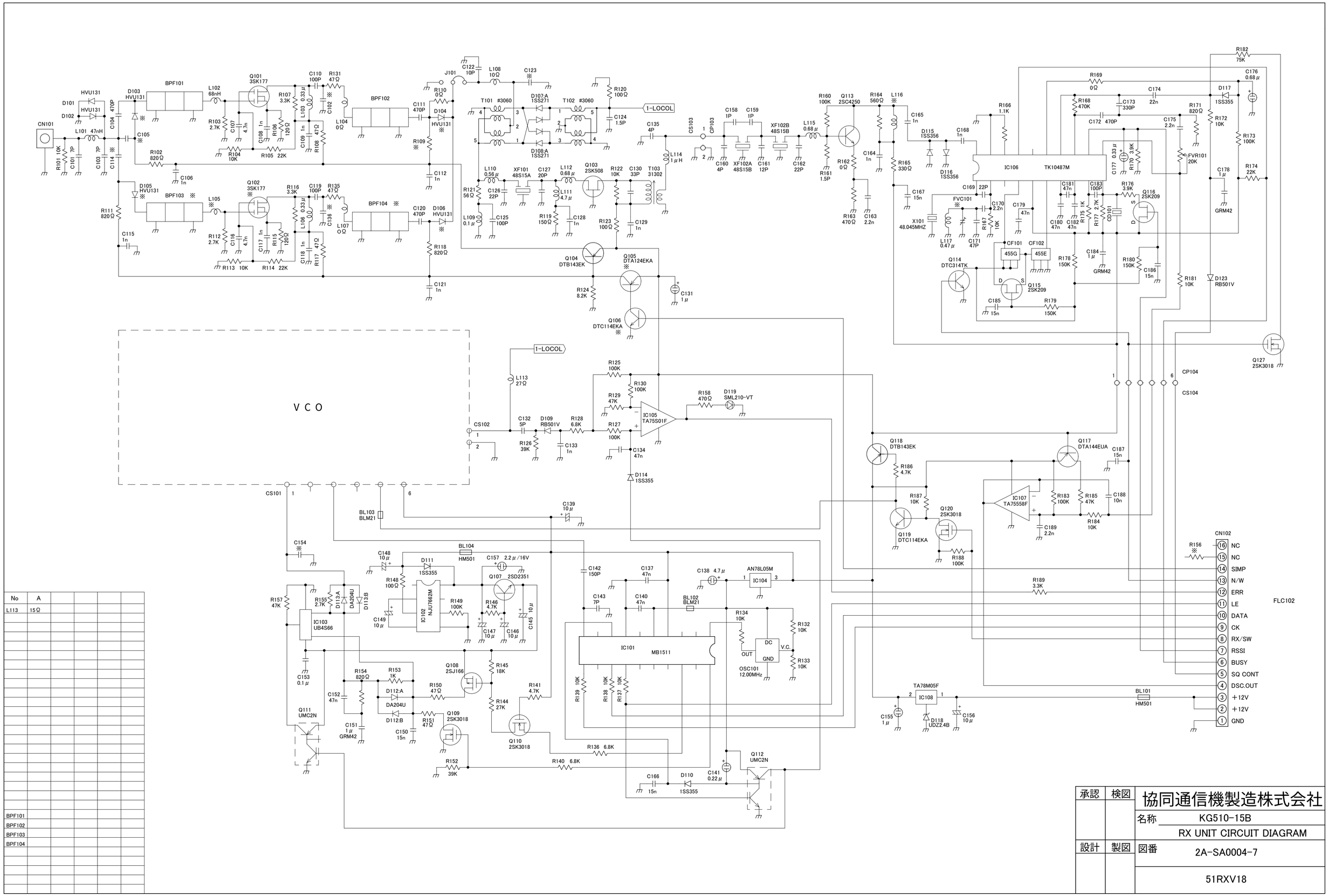

No	A				
L113	15Ω				
BPF101					
BPF102					
BPF103					
BPF104					

承認	検図	協同通信機製造株式会社
		名称 KG510-15B
		RX UNIT CIRCUIT DIAGRAM
設計	製図	図番 2A-SA0004-7
		51RXV18

51TXU86-4

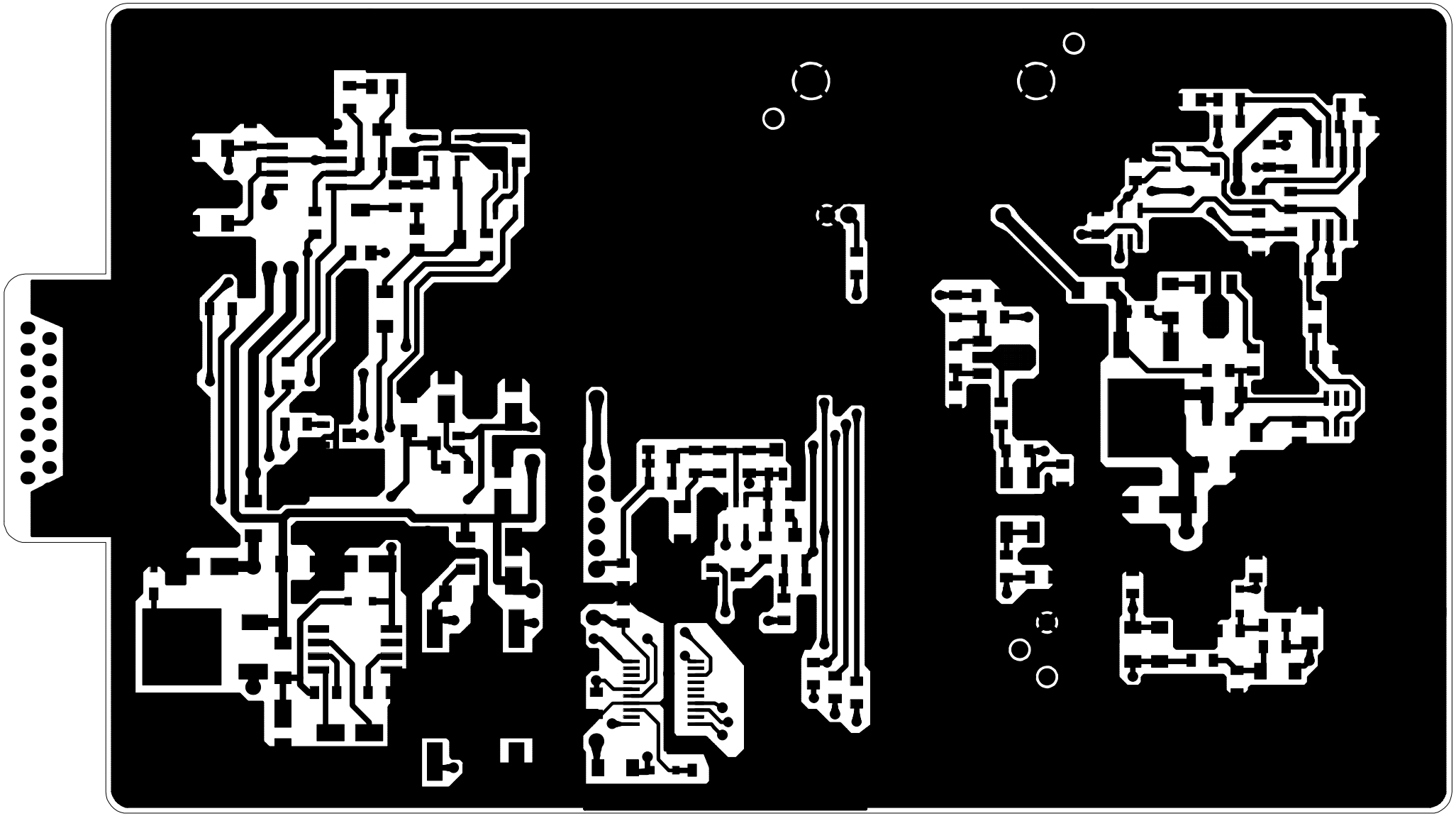

51TXU86-4

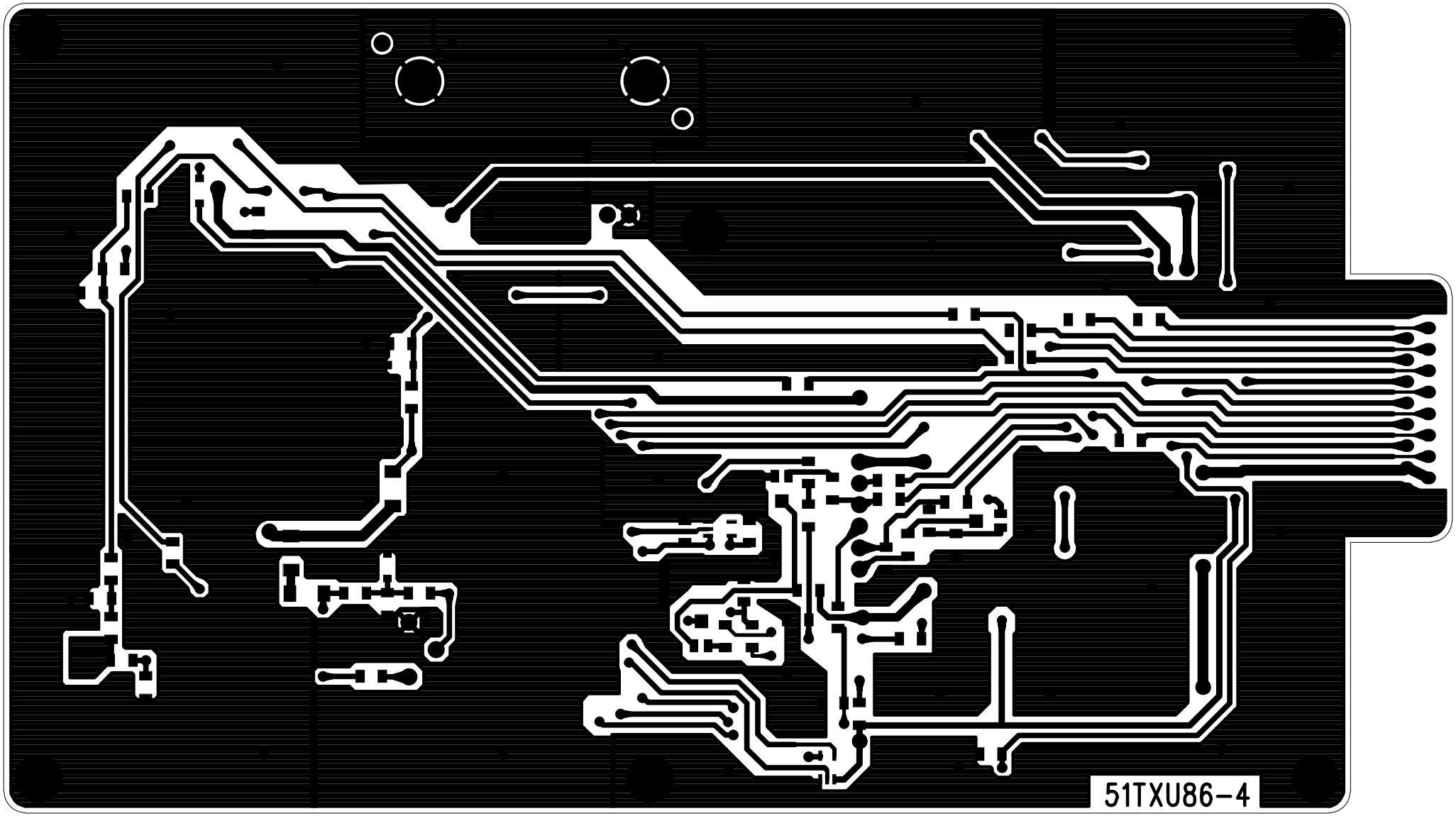

51TXU86-4

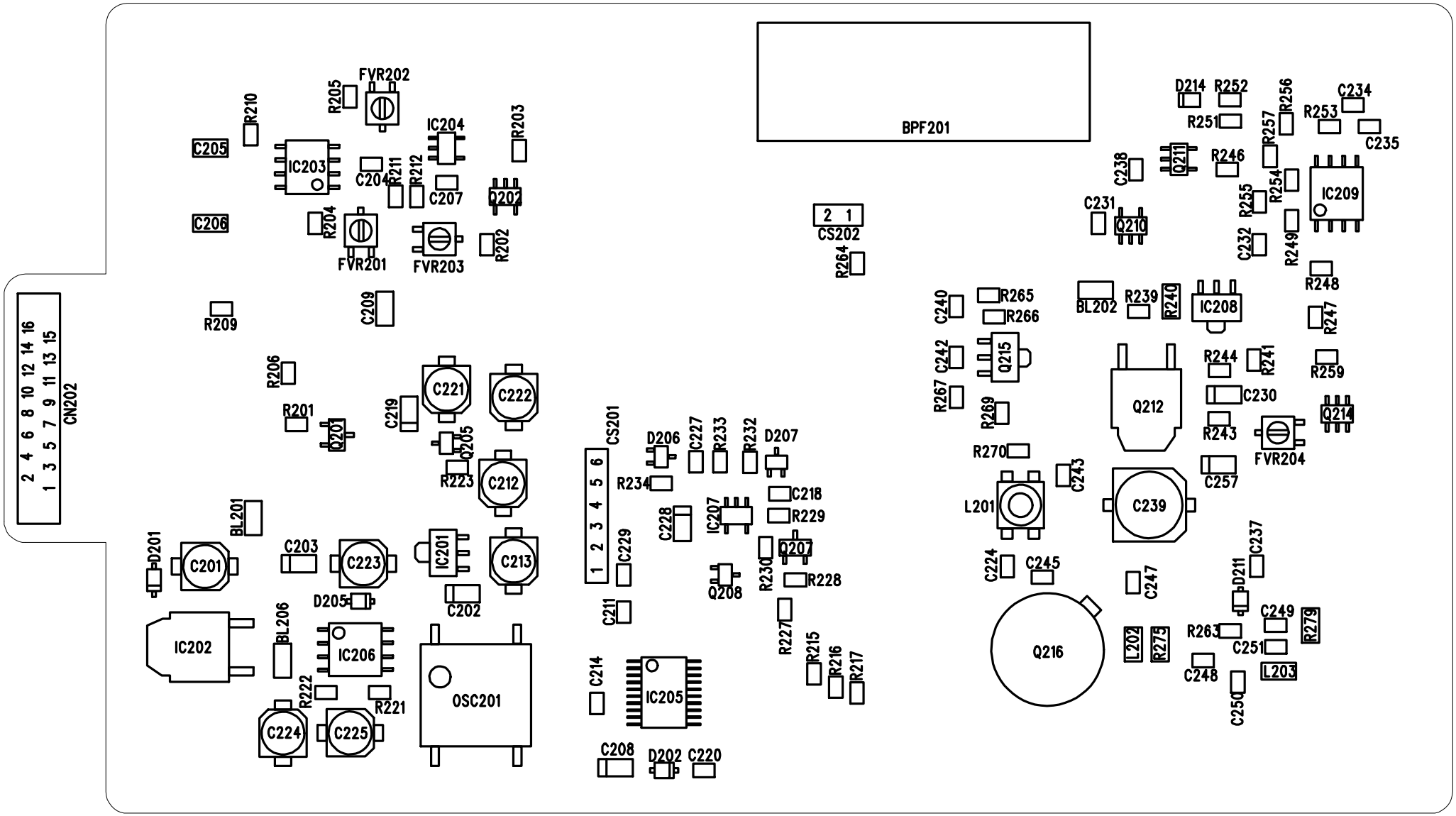
FVR202
R205
R210
IC204
R203
C205
IC203
C204
R211
R212
C207
Q202
C206
R204
FVR201
FVR203
R202
BPF201
D214
R252
R256
C234
R253
R251
C235
R257
R246
Q211
C238
R254
IC209
C231
Q210
R255
C232
R249
2 1
CS202
R264
R248
R265
C240
R266
BL202
R239
R240
IC208
R247
C242
Q215
R244
R241
R259
R267
Q212
C230
R269
Q214
R243
FVR204
R270
C243
C257
L201
C239
C224
C245
C247
C237
D211
C249
R279
R263
C251
Q216
L202
R275
C248
L203
C250
16 14 12 10 8 6 4 2
15 13 11 9 7 5 3 1
CN202
R209
C209
R206
C221
C222
R201
C219
Q201
Q205
R223
C212
CS201
D206
C227
R233
R232
D207
6 5 4 3 2 1
R234
C218
C228
IC207
R229
BL201
C229
Q207
D201
C201
C203
C223
IC201
C213
R230
R228
Q208
D205
C202
C211
R227
IC202
BL206
IC206
R215
R216
R217
C214
IC205
R222
R221
OSC201
C224
C225
C208
D202
C220

51TXU86-4

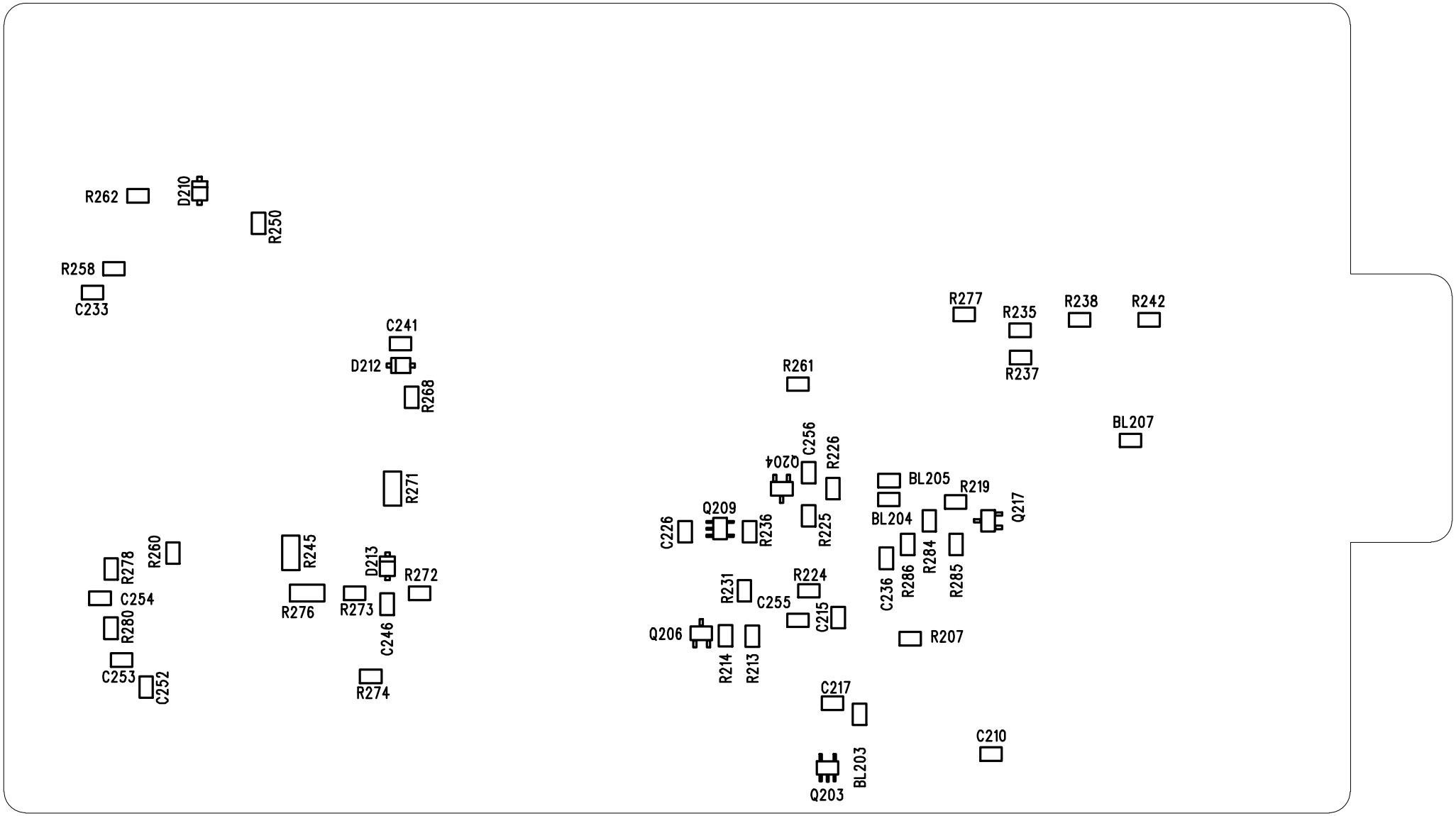
R262
D210
R250
R258
C233
C241
D212
R268
R271
R260
R278
C254
R280
C253
C252
R245
R276
D213
R273
R272
C246
R274
R277
R235
R238
R242
R237
R261
BL207
C256
Q204
R226
BL205
R219
Q217
Q209
C226
R236
R225
BL204
R284
R285
C236
R286
R231
R224
C255
C215
Q206
R214
R213
R207
C217
C210
BL203
Q203

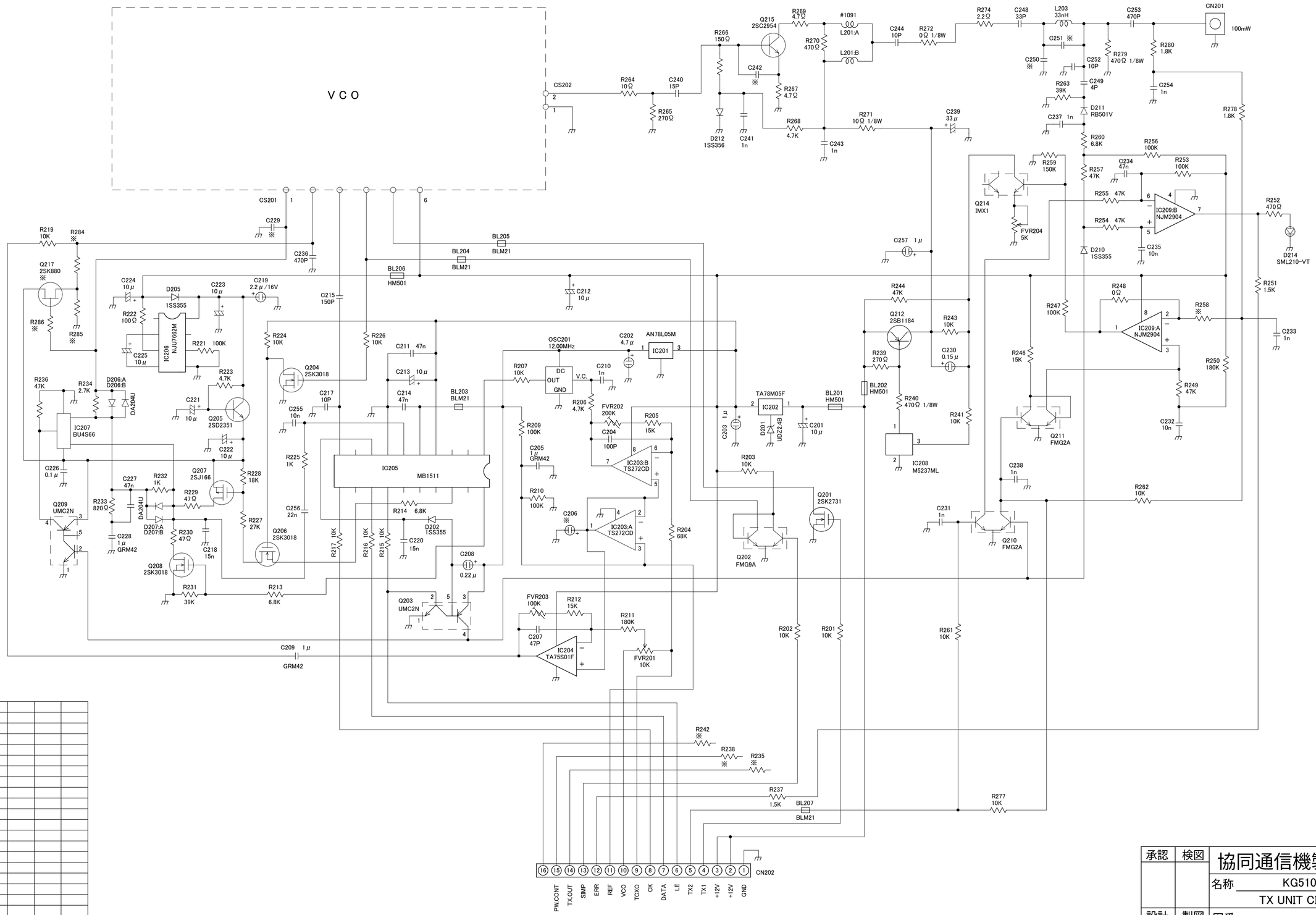

	A	B			
C244	22P	12P			
R214	7.5K	6.8K			

承認	検図	協同通信機製造株式会社
		名称 KG510-20C
		TX UNIT CIRCUIT DIAGRAM
設計	製図	図番 2A-SA0048-2
		51TX218

51TXU86-4

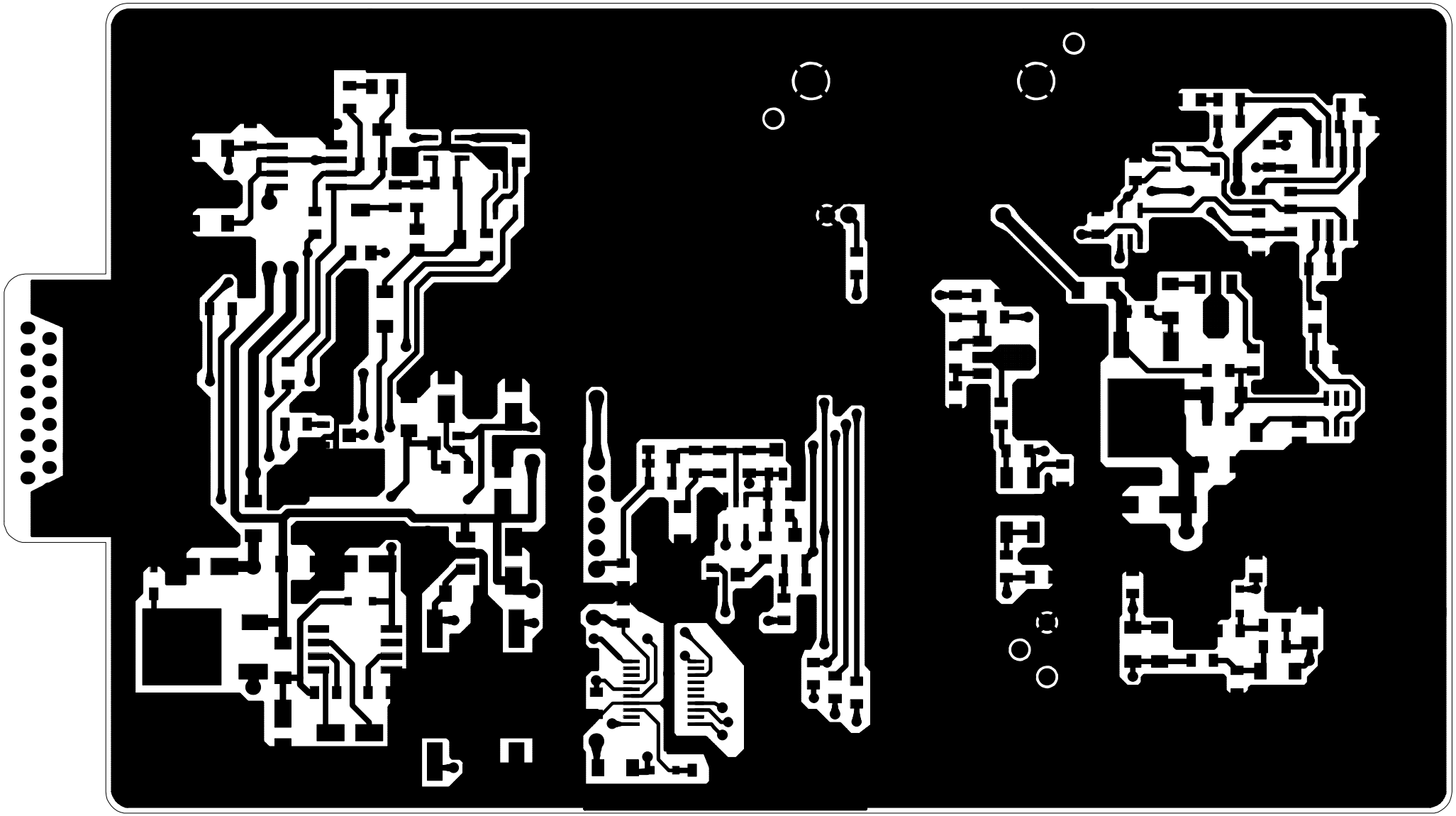

51TXU86-4

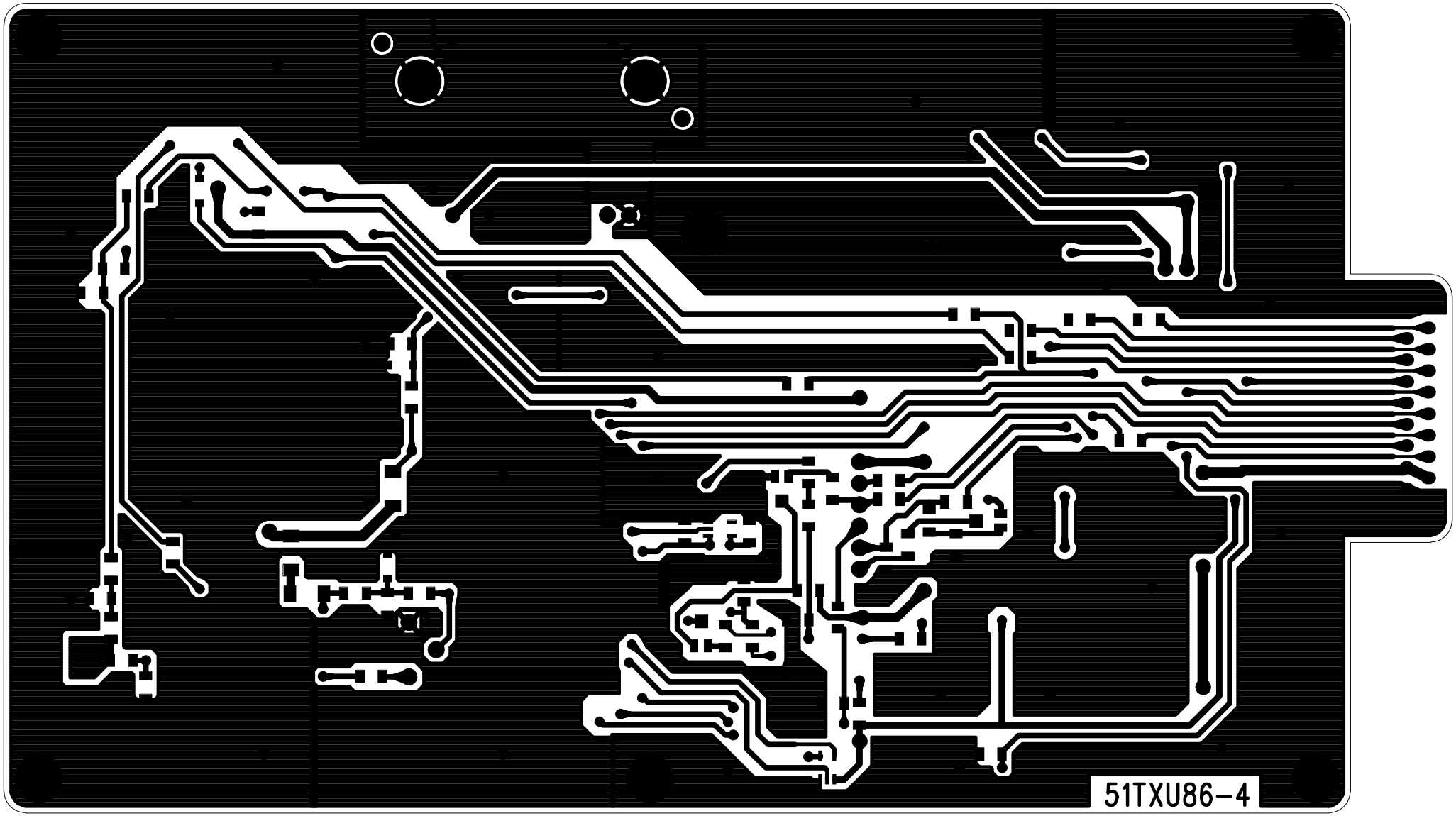

51TXU86-4

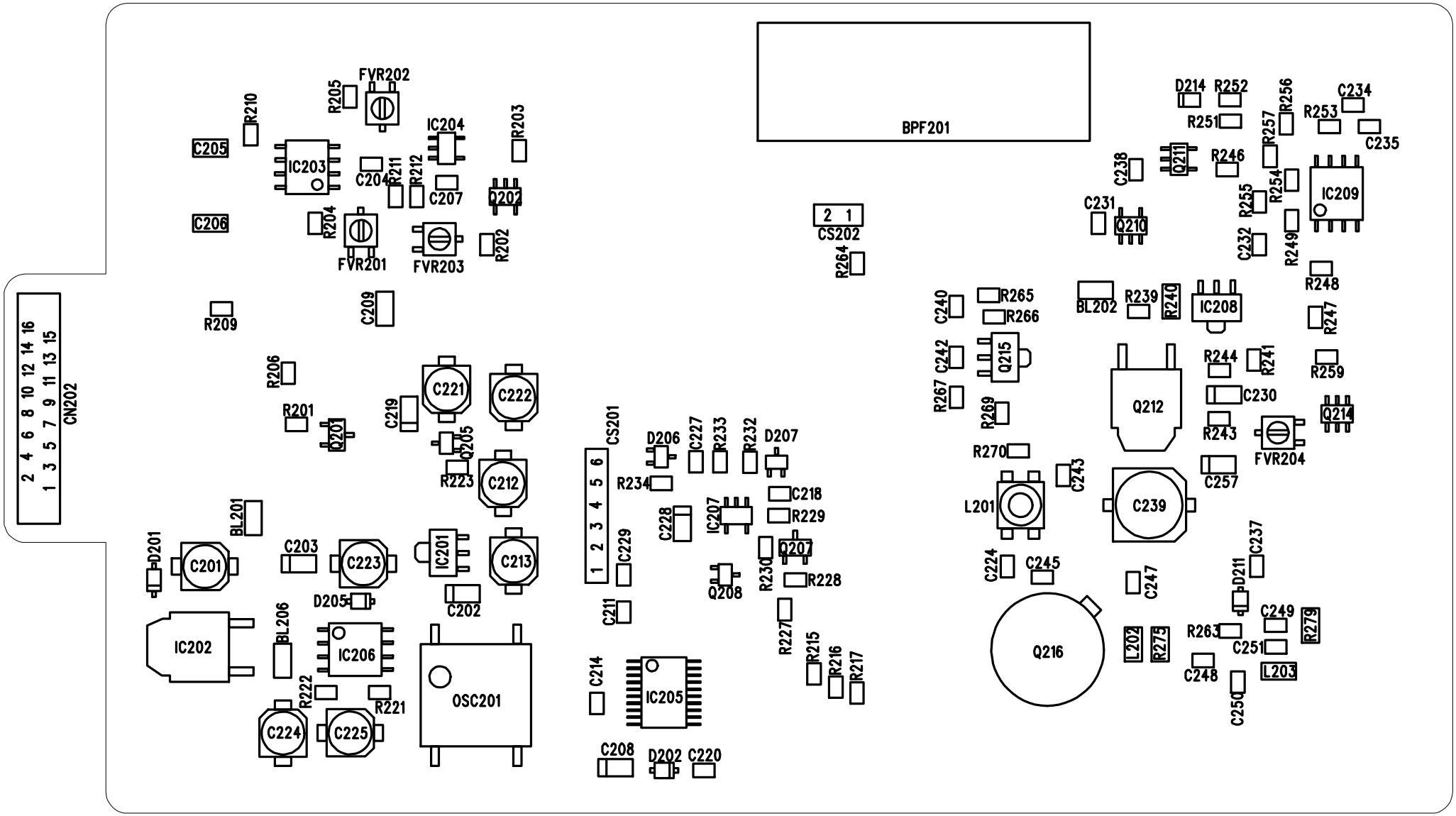
BPF201
CS202
2 1
R264
FVR202
R205
R210
IC204
R203
C205
IC203
C204
R211
R212
C207
Q202
C206
R204
FVR201
FVR203
R202
R209
C209
CN202
16 14 12 10 8 6 4 2
15 13 11 9 7 5 3 1
R206
R201
Q201
C219
C221
C222
Q205
R223
C212
CS201
6 5 4 3 2 1
D206
C227
R233
R232
D207
R234
C218
R229
C228
IC207
Q207
C229
R230
R228
Q208
R227
R215
R216
R217
BL201
D201
C201
C203
C223
IC201
C213
D205
C202
C211
IC202
BL206
IC206
OSC201
R222
R221
C224
C225
C214
IC205
C208
D202
C220
D214
R252
R256
C234
R253
R251
C235
R257
Q211
R246
C238
R254
IC209
C231
Q210
R255
C232
R249
R248
C240
R265
R266
BL202
R239
R240
IC208
R247
C242
Q215
R244
R241
R259
R267
Q212
C230
R269
R243
Q214
R270
FVR204
C243
C257
L201
C239
C237
C224
C245
C247
D211
C249
R279
Q216
R263
L202
R275
C251
C248
L203
C250

51TXU86-4

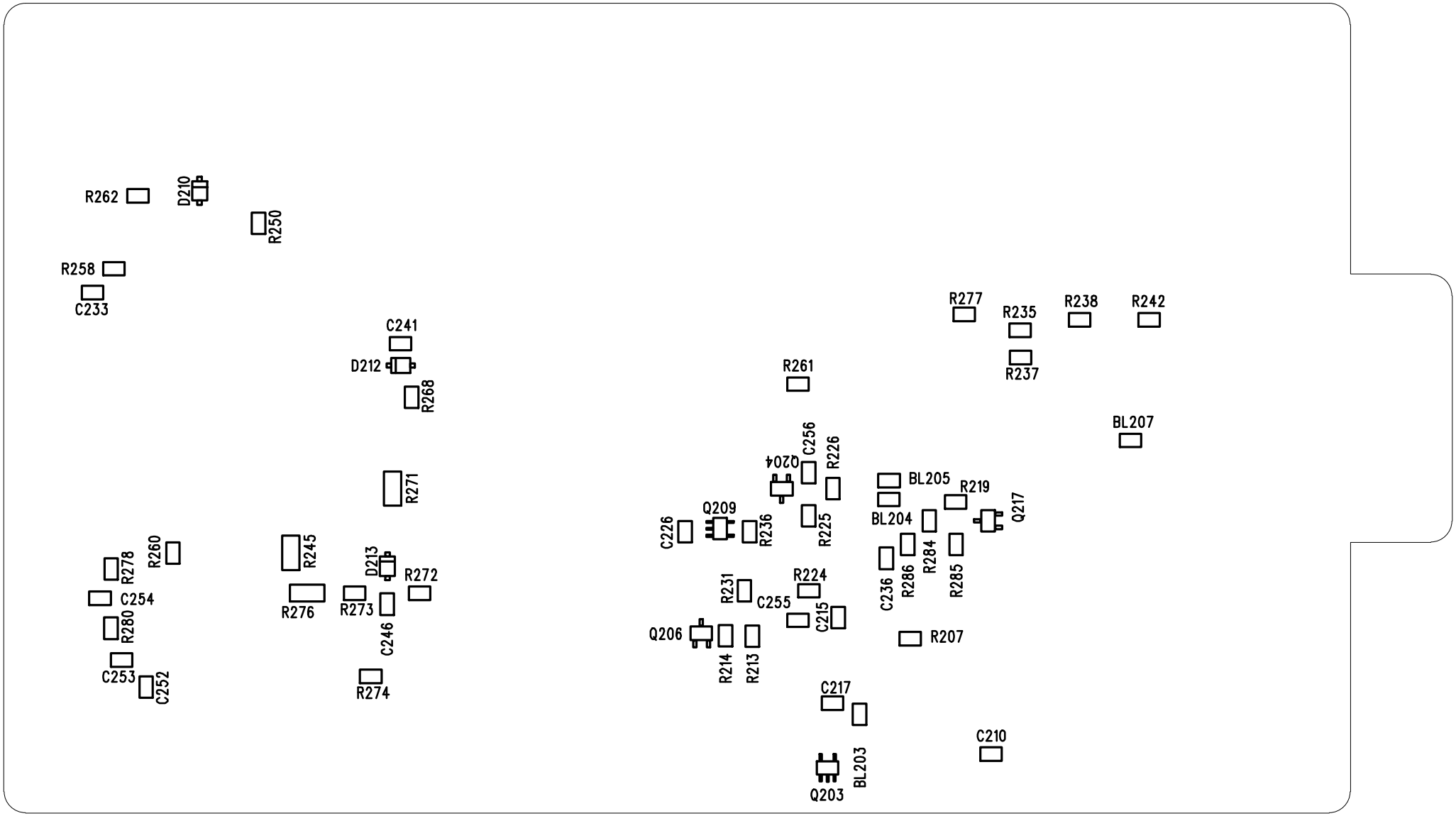
R262
D210
R250
R258
C233
C241
D212
R268
R271
R260
R278
C254
R280
C253
C252
R245
R276
D213
R273
R272
C246
R274
R277
R235
R238
R242
R237
R261
BL207
C256
Q204
R226
BL205
R219
Q217
Q209
C226
R236
R225
BL204
R284
R285
C236
R286
R231
R224
C255
C215
Q206
R214
R213
R207
C217
C210
BL203
Q203

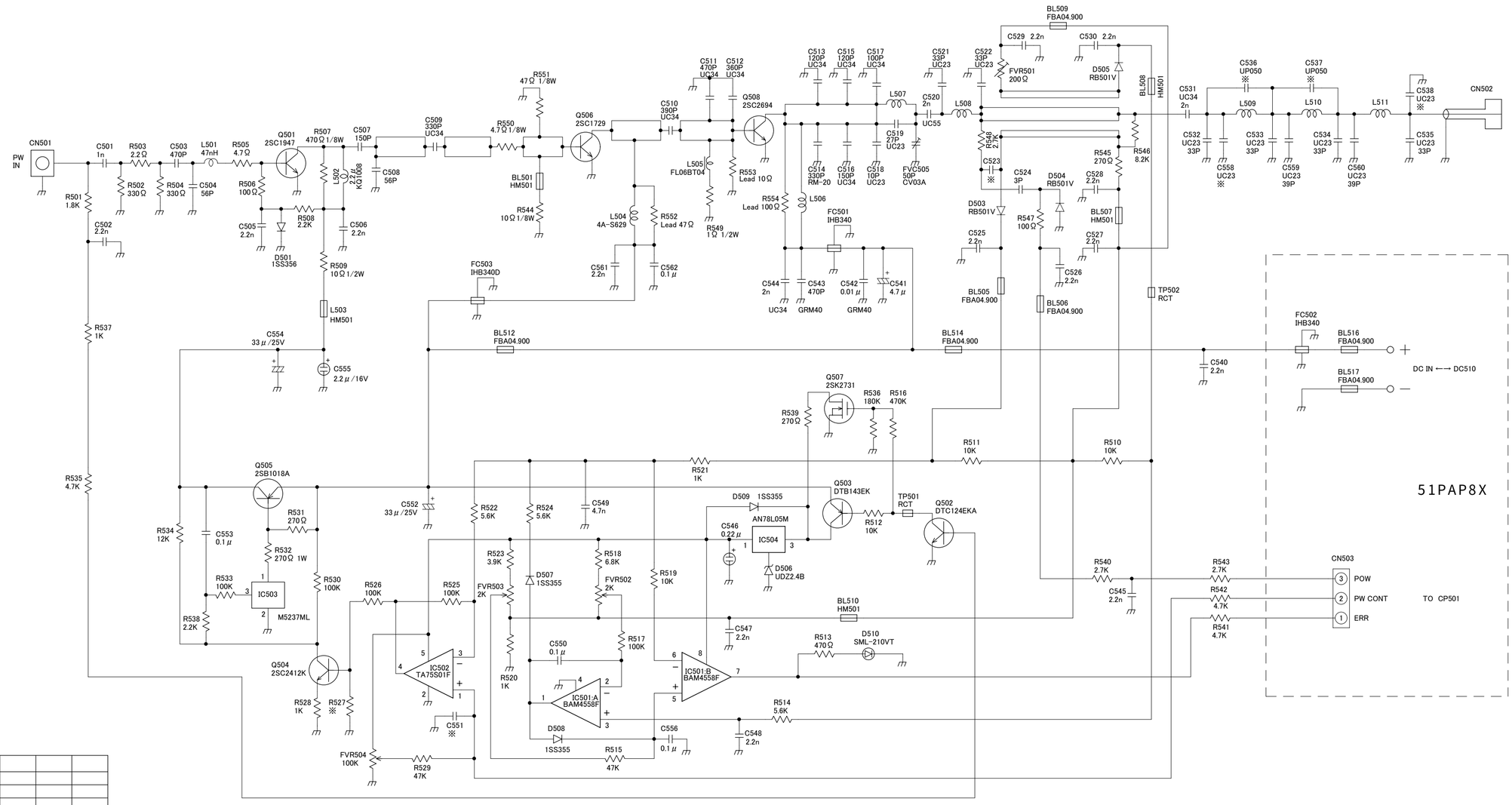

	A				

66MHz---88MHz

承認	検図	協同通信機製造株式会社
		名称 KG510-08
		PA UNIT CIRCUIT DIAGRAM
設計	製図	図番 2A-SA0041-2
		51PA816

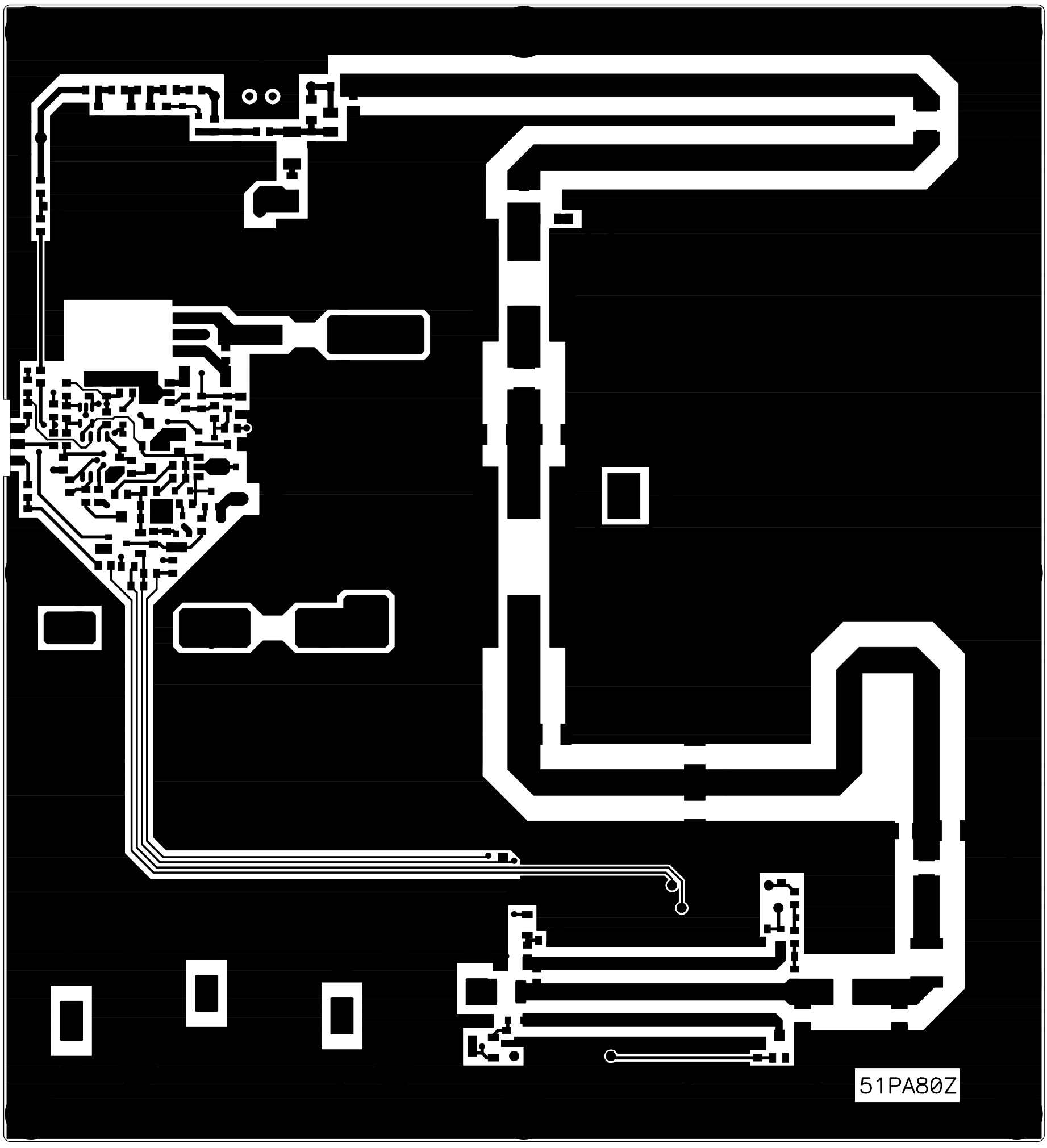

80MHz

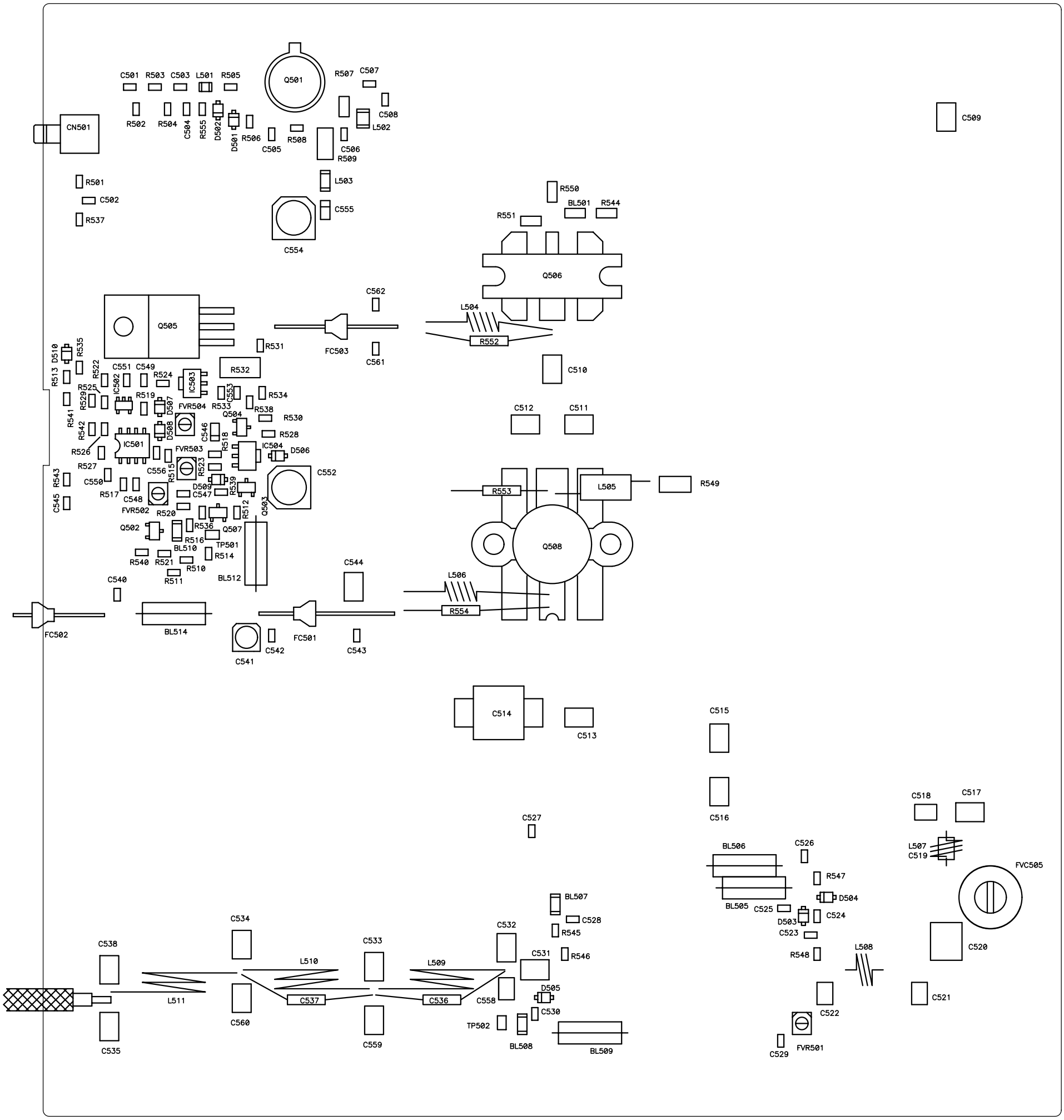
C501
R503
C503
L501
R505
Q501
R507
C507
C508
L502
C509
CN501
R502
R504
C504
R555
D502
D501
R506
C505
R508
C506
R509
R501
C502
R537
L503
C555
C554
R550
BL501
R544
R551
Q506
C562
L504
R552
Q505
FC503
C561
R531
C510
R532
C551
C549
R524
IC503
R534
R525
IC502
R519
C553
R533
FVR504
R538
C512
C511
Q504
R530
D507
R529
R541
R542
D508
C546
R518
R528
R526
IC501
FVR503
IC504
D506
R527
R523
C556
R515
C552
R543
C550
D509
R539
R553
L505
R549
C545
R517
C548
C547
FVR502
R520
R512
Q503
Q502
R536
Q507
R516
TP501
BL510
R514
Q508
R540
R521
R510
C544
R511
BL512
C540
L506
R554
FC502
BL514
C541
C542
FC501
C543
C514
C513
C515
C516
C518
C517
C527
BL506
C526
L507
C519
FVC505
R547
D504
BL507
BL505
C525
C524
C528
D503
R545
C523
C534
C532
C533
R548
L508
C520
C538
L510
L509
C531
R546
L511
C537
C536
C558
D505
C521
C530
C522
C560
TP502
C535
C559
BL508
BL509
C529
FVR501

80MHz PA

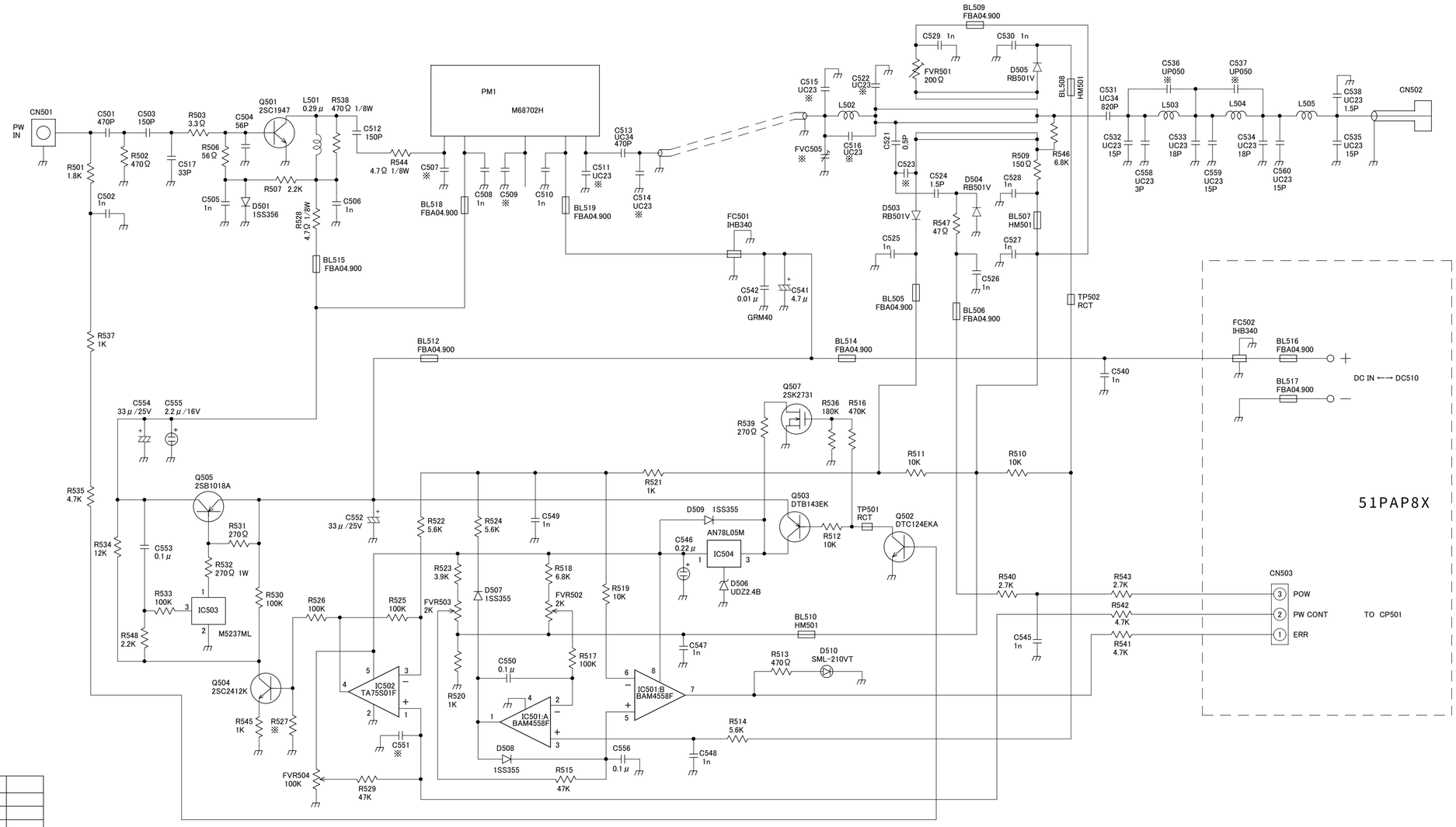

	A				
PM1	M68702L				
C504	100P				
C515	6P				
C516	8P				
C536	1P				
C537	1P				
C559	18P				
C560	18P				
R509	220Ω				
R546	3.9K				

承認	検図	協同通信機製造株式会社
		名称 KG510-15B
		PA UNIT CIRCUIT DIAGRAM
設計	製図	図番 2A-SA0008-7
		51PAV1Z

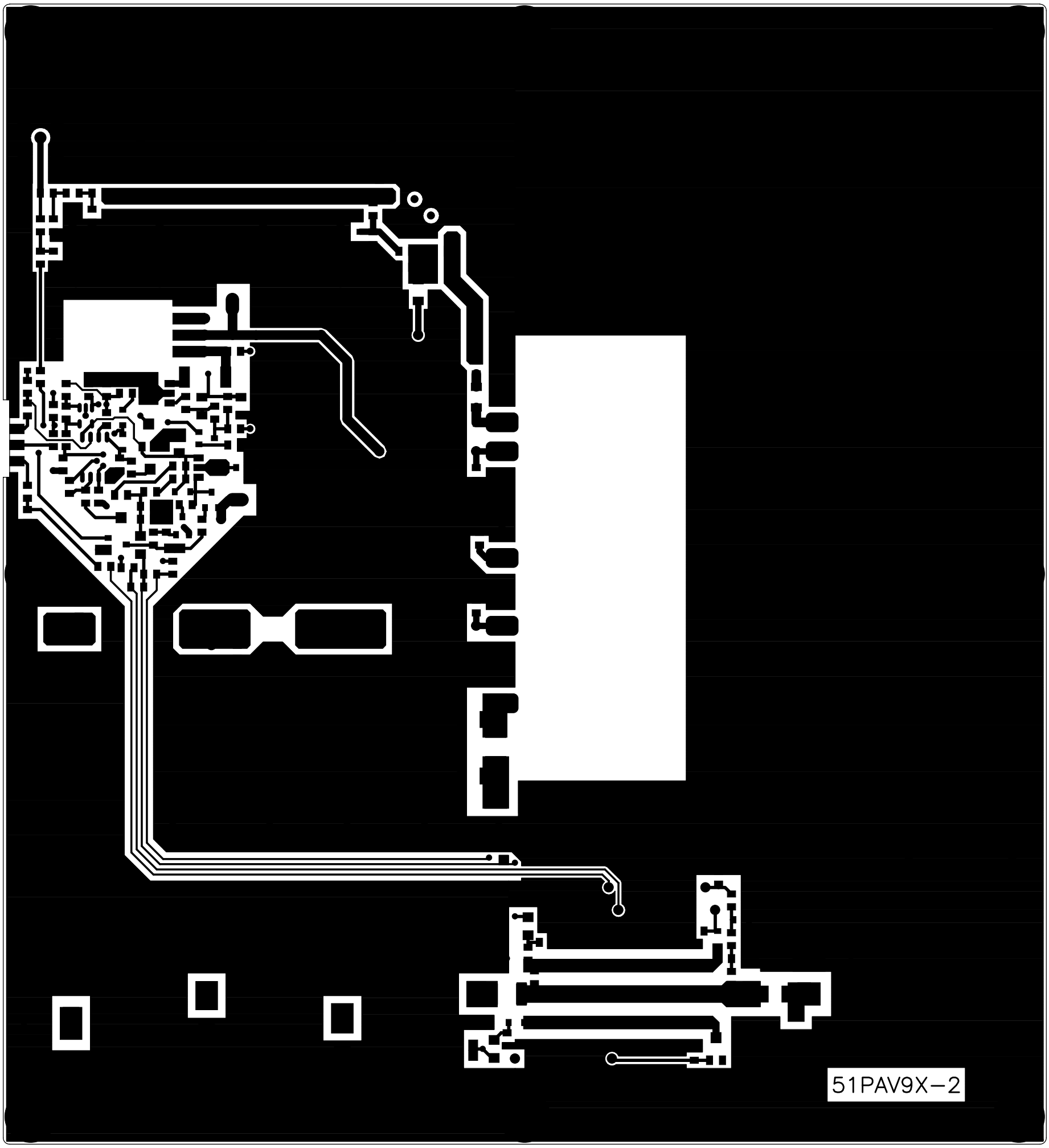

VHF

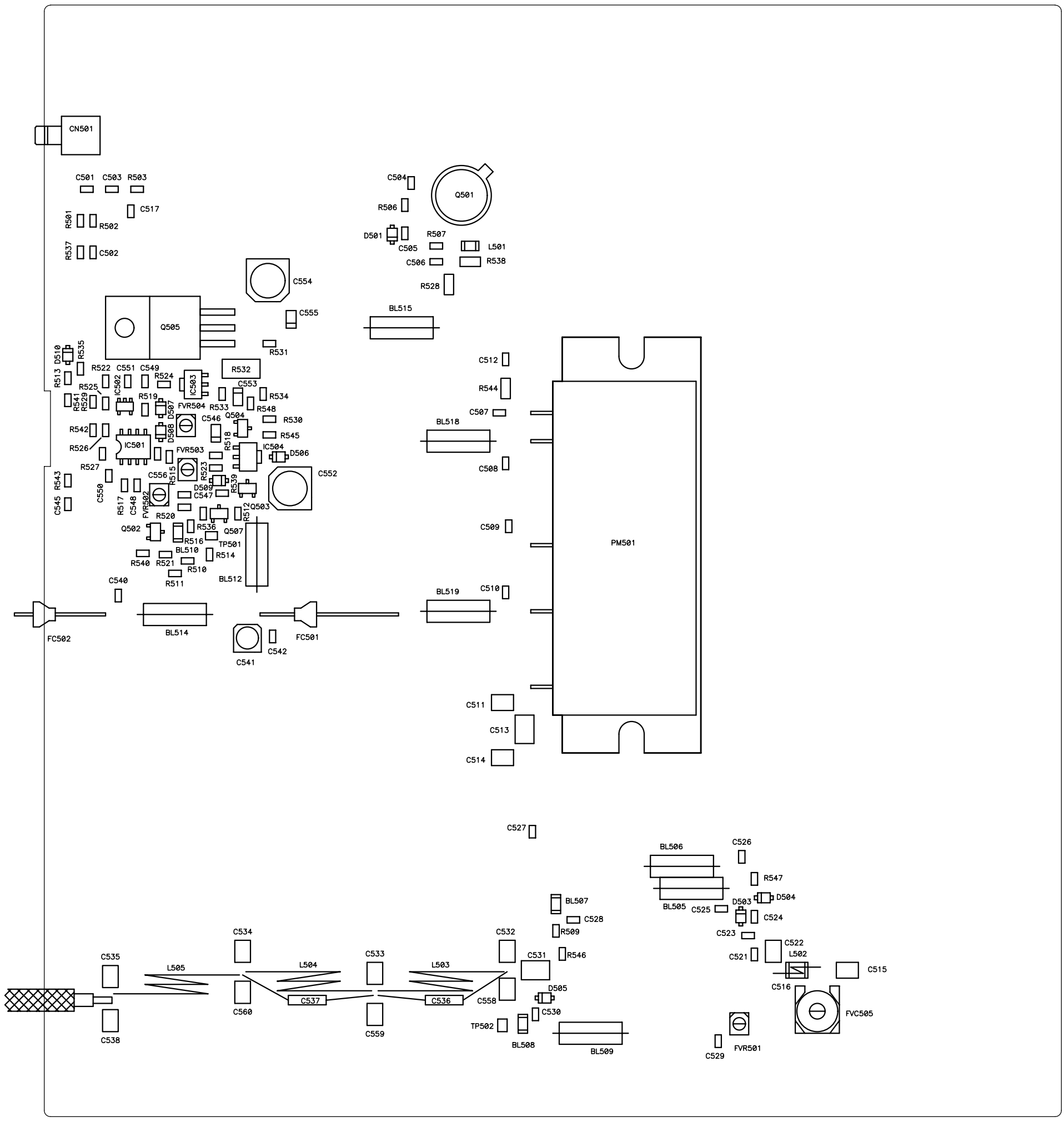
CN501
C501
C503
R503
C517
R501
R502
R537
C502
C504
Q501
R506
D501
R507
C505
L501
C506
R538
R528
C554
C555
BL515
Q505
R531
R513
D510
R535
R522
C551
C549
R524
IC503
R532
C553
R525
IC502
R519
R534
R541
R529
FVR504
R533
R548
D507
C546
Q504
R530
R542
D508
R518
R545
R526
IC501
FVR503
IC504
D506
R527
R515
R523
C552
R543
C556
R539
C550
D509
C547
C545
R517
C548
FVR502
R512
Q503
R520
Q502
R536
Q507
R516
TP501
BL510
R514
R540
R521
R510
R511
BL512
C540
FC502
BL514
FC501
C541
C542
C512
R544
C507
BL518
C508
C509
PM501
BL519
C510
C511
C513
C514
C527
BL506
C526
R547
BL505
C525
D503
D504
C524
BL507
C528
R509
C523
C534
C532
C522
C521
L502
C535
L505
L504
C533
L503
C531
R546
C515
C537
C536
C558
D505
C516
C560
C559
C530
FVC505
TP502
BL508
BL509
C529
FVR501
C538

VHF PA

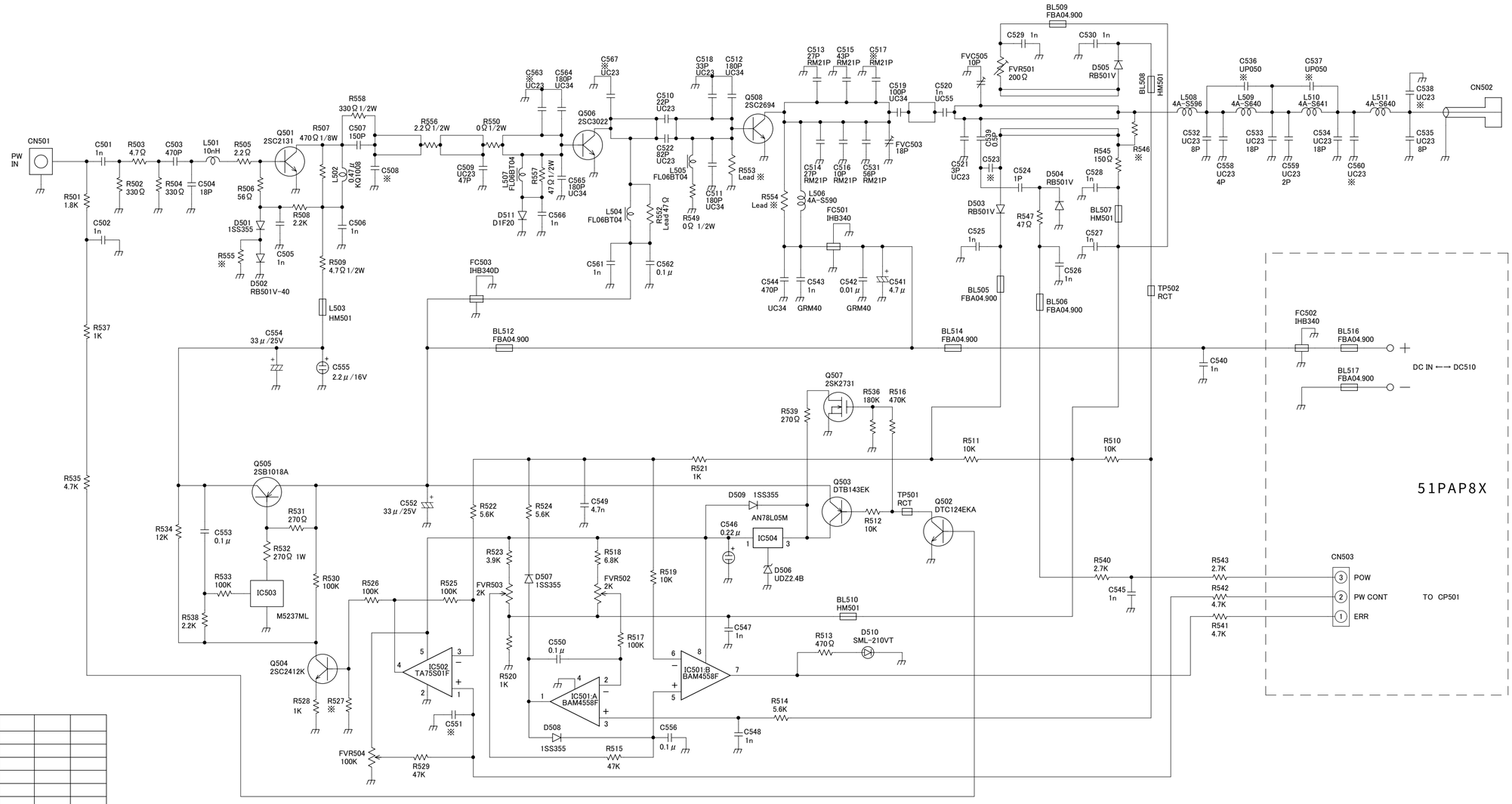

	A	B			
C504	47P	18P			
C509	68P	56P			
C510	56P	33P			
C511	270P	180P			
C512	270P	220P			
C515	82P	82P			
C517	47P	※			
C518	※	※			
C519	150P	120P			
C521	10P	3P			
C524	2P	1.5P			
C531	33P	15P			
C532	10P	10P			
C533	22P	22P			
C534	22P	22P			
C535	10P	10P			
C536	2P	1P			
C538	3P	※			
C558	10P	4P			
C559	10P	3P			
C560	8P	※			
C564	270P	220P			
C565	270P	220P			
C567	56P	※			
FVC505	18P	18P			
L501	0Ω	0Ω			
Q501	2SC1947	2SC2131			
R504	※	330Ω			
R506	100Ω	150Ω			
R546	5.6K	8.2K			
R550	1Ω	1Ω			
R556	0Ω	2.2Ω			

承認	検図	協同通信機製造株式会社
		名称 KG510-20C
		PA UNIT CIRCUIT DIAGRAM
設計	製図	図番 2A-SA0009-2
		51PA221

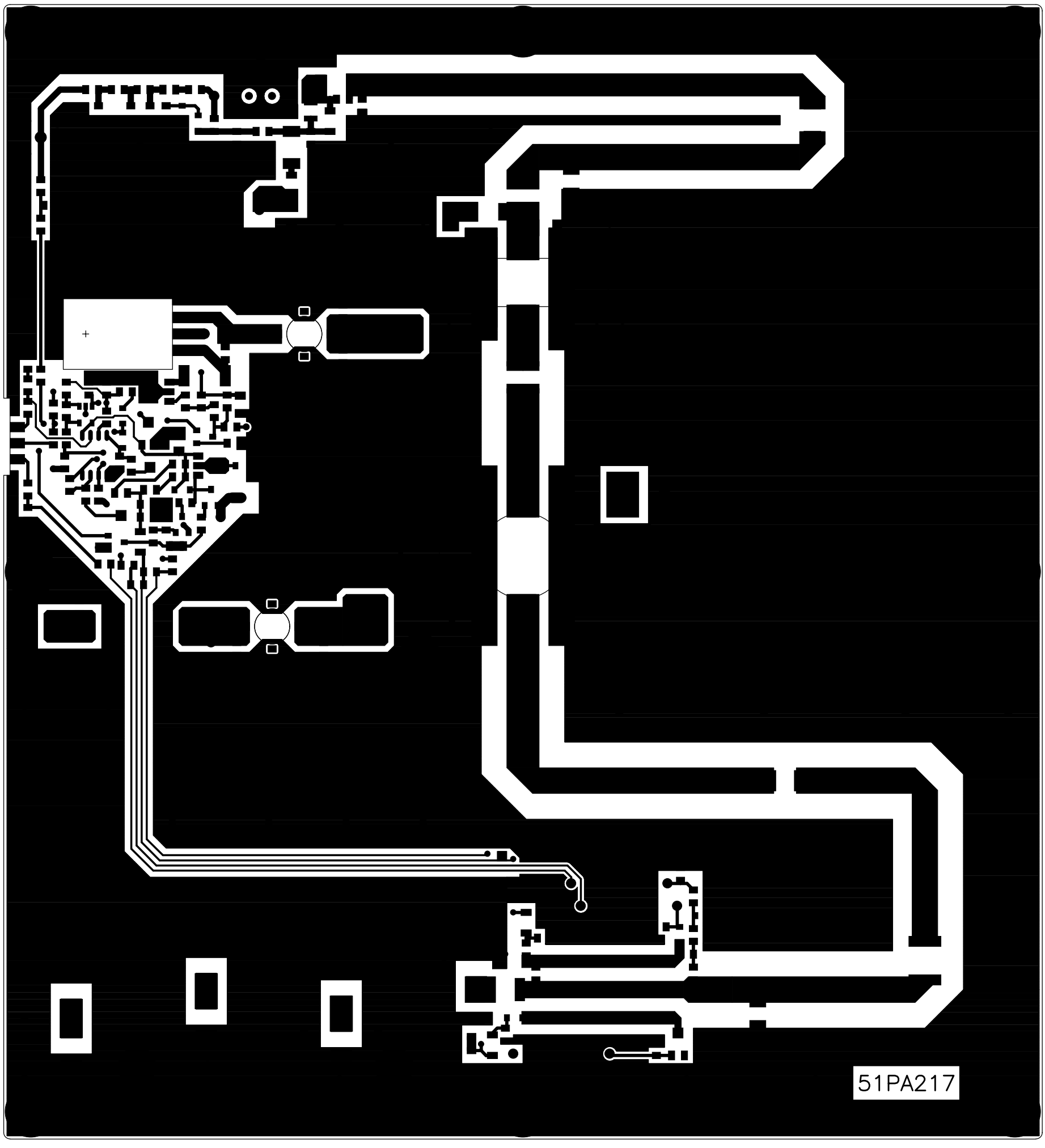

200MHz PA

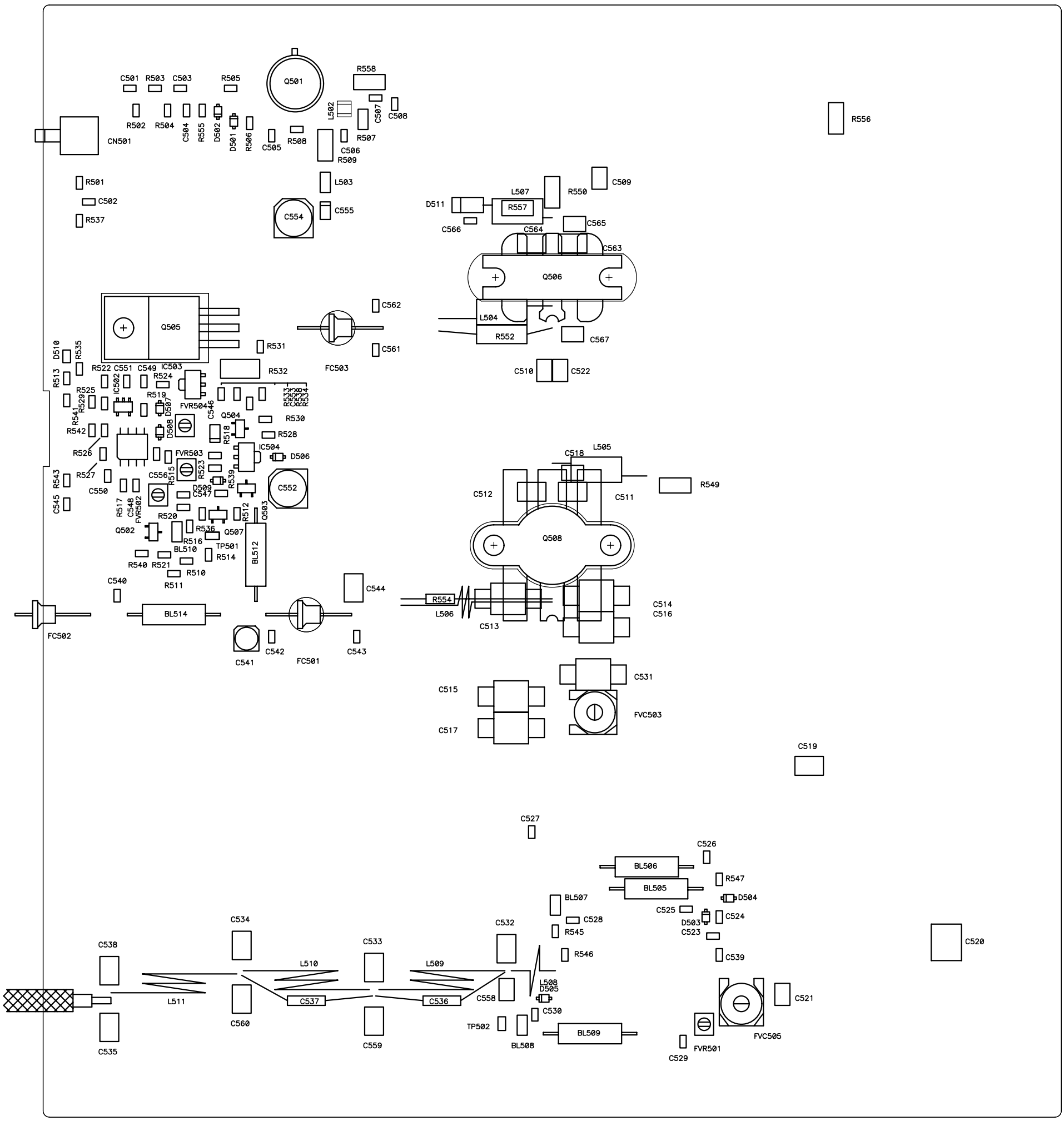
C501
R503
C503
R505
Q501
R558
R502
R504
C504
R555
D502
D501
R506
C505
R508
L502
R507
C507
C508
CN501
C506
R509
R556
R501
L503
C509
C502
L507
R550
D511
R557
R537
C554
C555
C566
C564
C565
C563
Q506
C562
L504
R552
C567
Q505
R531
C561
FC503
C510
C522
D510
R535
R513
R522
C551
C549
IC503
R524
R532
R525
IC502
R519
R533
C553
R538
R534
R529
D507
FVR504
C546
R541
Q504
R530
D508
R518
R542
R528
IC504
D506
R526
FVR503
C518
L505
R523
R515
R539
R549
R543
C556
C552
C512
C511
C550
D509
C547
C545
R517
C548
FVR502
R520
R512
Q503
Q508
Q502
R536
Q507
R516
TP501
BL510
R514
BL512
R540
R521
R510
R511
C540
C544
R554
L506
C514
C516
C513
BL514
FC502
C541
C542
FC501
C543
C531
C515
FVC503
C517
C519
C527
C526
BL506
R547
BL505
D504
BL507
C525
C528
D503
C524
C534
C532
R545
C523
C538
C533
R546
C520
C539
L510
L509
L508
D505
L511
C537
C536
C558
C521
C530
C560
TP502
BL509
FVC505
C535
C559
BL508
FVR501
C529

200MHz PA

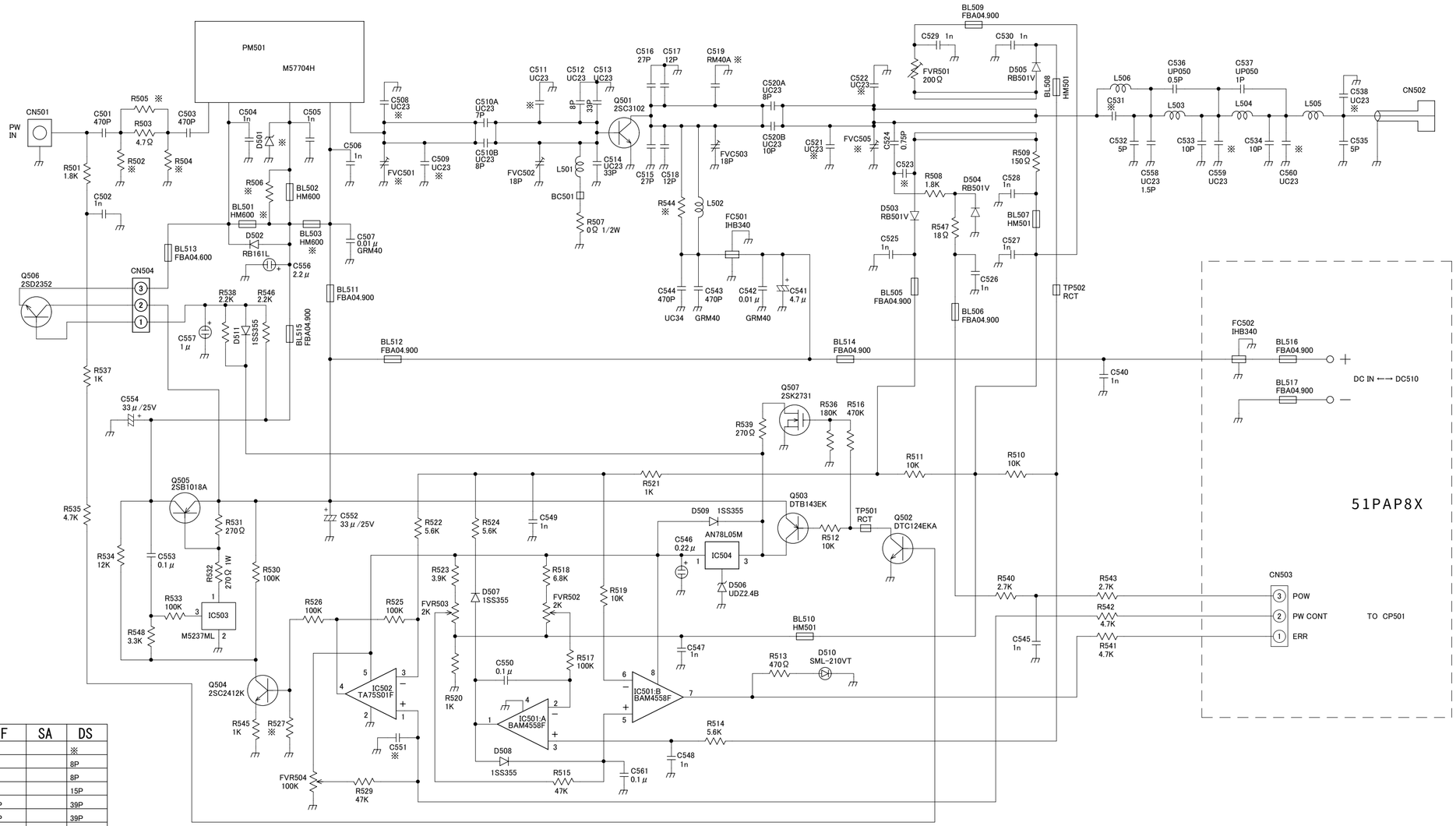

No	A	B	C	E	F	SA	DS
C508	6P	3P	※	※	※		※
C510A	15P	15P	10P	6P	5P		8P
C510B	22P	10P	8P	6P	3P		8P
C512	47P	8P	10P	12P	※		15P
C513	47P	47P	39P	27P	27P		39P
C514	47P	47P	39P	27P	27P		39P
C515	33P	33P	33P	27P	27P		33P
C516	33P	33P	33P	27P	27P		33P
C517	33P	27P	15P	10P	12P		15P
C518	33P	27P	15P	10P	※		12P
C519	5P	※	※	※	※		※
C520A	22P	15P	15P	7P	5P		10P
C520B	22P	15P	10P	7P	3P		10P
C522	5P	3P	3P	※	※		3P
C524	1.5P	1P	0.75P	0.5P	0.5P		0.75P
C531	※	※	※	※	470P		※
C533	15P	12P	10P	10P	10P		10P
C534	15P	12P	10P	10P	10P		10P
C536	1P	1P	※	※	※		0.5P
C537	1P	1P	1P	1P	※		1P
C538	2P	1P	※	※	※		※
C558	4P	1P	2P	1P	※		2P
L503	4A-S594	4A-S594	4A-S594	4A-S592	4A-S592		4A-S594
L504	4A-S595	4A-S595	4A-S595	4A-S593	4A-S593		4A-S595
L505	4A-S594	4A-S594	4A-S594	4A-S592	4A-S592		4A-S594
L506	4A-S591	4A-S591	4A-S591	4A-S591	※		4A-S591
R503	4.7Ω	4.7Ω	4.7Ω	4.7Ω	0Ω		4.7Ω
R507	1Ω	1Ω	0Ω	0Ω	0Ω		0Ω
R508	3.3K	1.8K	1.5K	1.5K	1.5K		1.5K
R509	150Ω	150Ω	100Ω	150Ω	220Ω		100Ω
R546	1.0K	1.5K	2.2K	2.2K	2.2K		2.2K
R547	27Ω	18Ω	18Ω	18Ω	18Ω		18Ω
PM501	M57704EL	M57704SL	M57704L	M57704UH	M57704SH		M57704M

承認	検図	協同通信機製造株式会社
		名称 KG510-40D
		PA UNIT CIRCUIT DIAGRAM
設計	製図	図番 2A-SA0007-7
		51PAU21

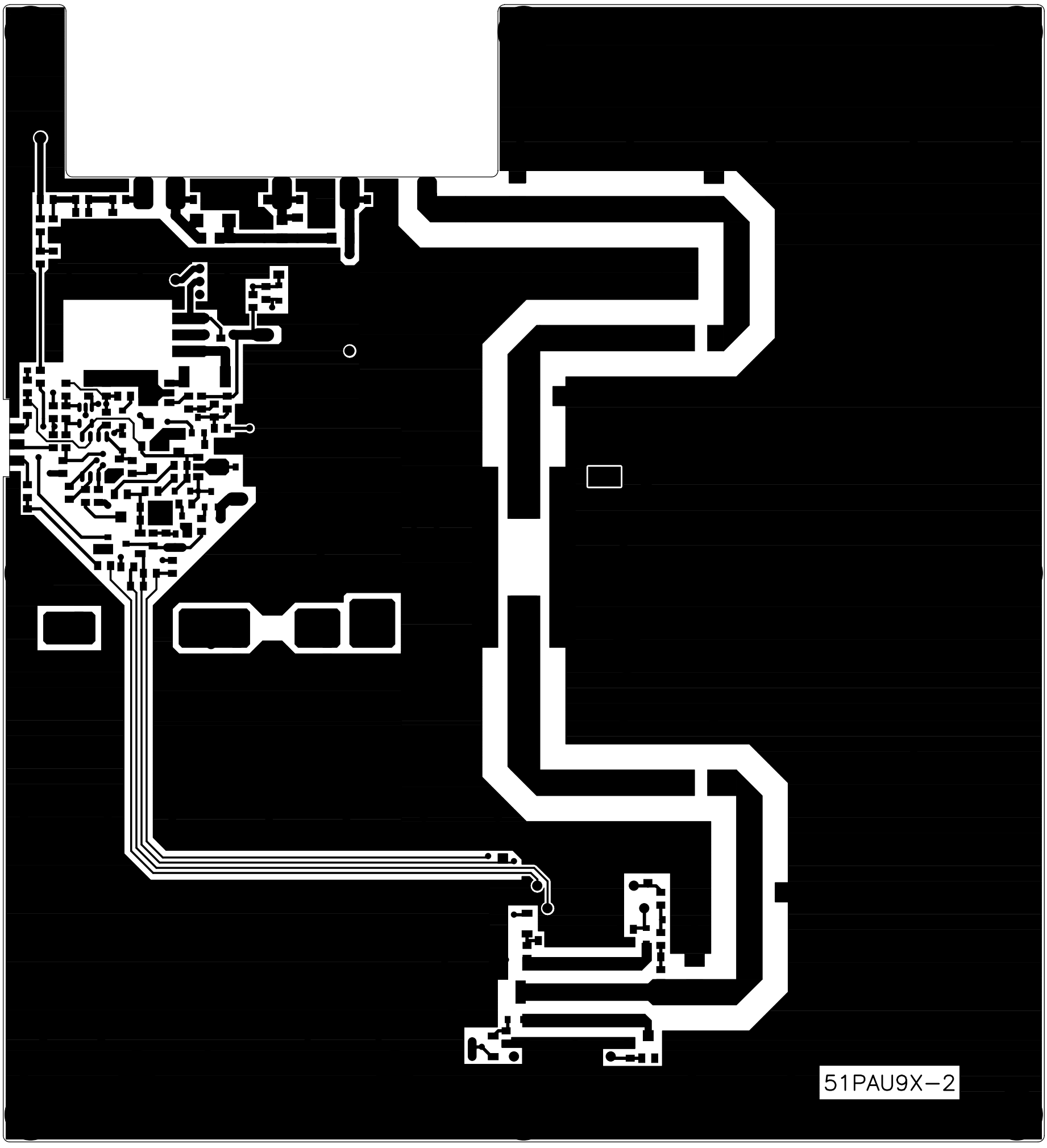

UHF

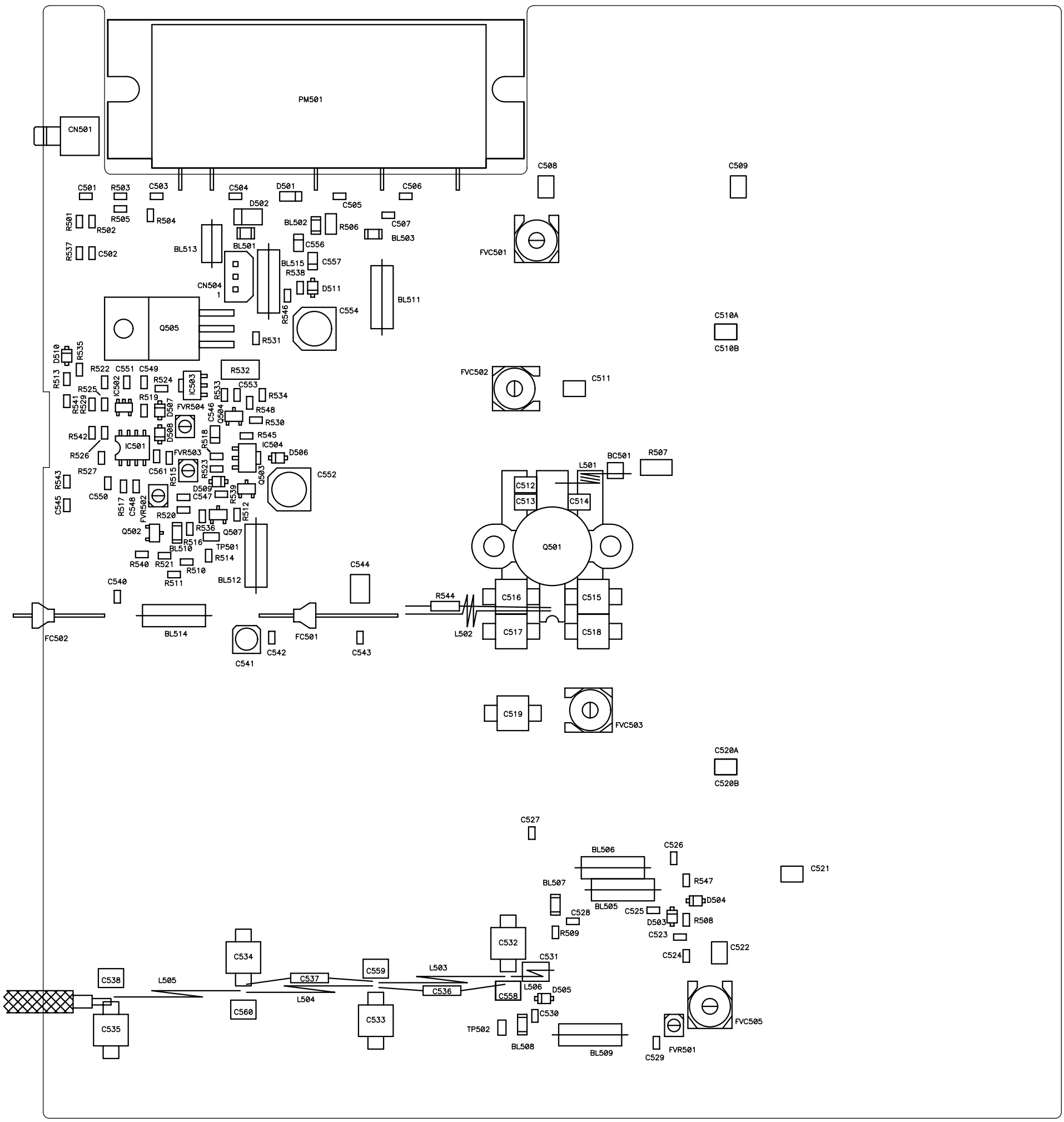
PM501
CN501
C501
R503
C503
C504
D501
C506
C508
C509
D502
C505
R501
R502
R505
R504
BL502
R506
C507
BL503
R537
C502
BL513
BL501
C556
FVC501
BL515
C557
R538
CN504
1
D511
BL511
R546
C554
Q505
R531
C510A
C510B
D510
R535
R513
R522
C551
C549
R532
FVC502
C511
R525
C502
R524
IC503
R533
C553
R534
R541
R529
R519
D507
FVR504
C546
Q504
R548
R530
R542
IC501
D508
R518
R545
IC504
D506
R526
FVR503
R523
BC501
R507
L501
R527
C561
R515
Q503
C552
C512
C513
C514
R543
C550
D509
C547
R539
C545
R517
C548
FVR502
R520
R512
Q502
R536
Q507
R516
Q501
BL510
TP501
R540
R521
R514
R510
C544
C540
R511
BL512
R544
C516
C515
FC502
BL514
FC501
L502
C517
C518
C541
C542
C543
C519
FVC503
C520A
C520B
C527
BL506
C526
C521
R547
BL507
D504
BL505
C525
C528
D503
R508
R509
C523
C532
C524
C522
C534
C531
C538
L505
C537
C559
L503
L506
D505
C536
C558
L504
C560
C533
C530
C535
TP502
FVC505
BL508
BL509
FVR501
C529

UHF PA 部品配置図

TX VCO UNIT

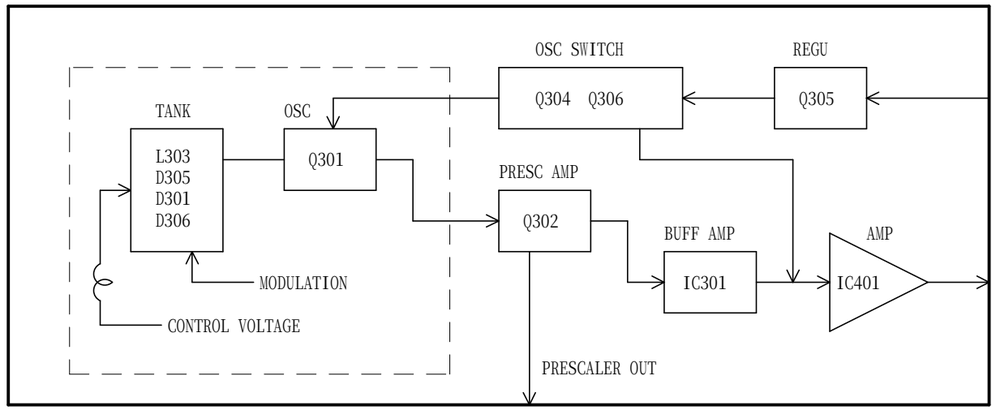

RX VCO UNIT

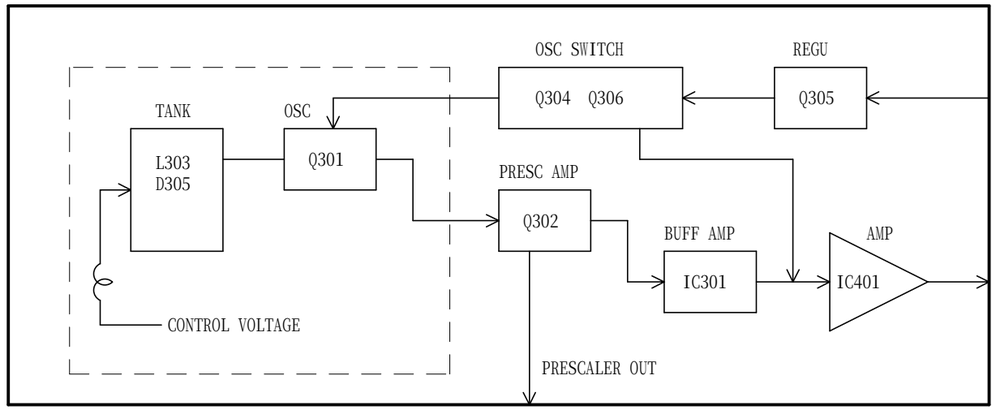

承認	検図	協同通信機製造株式会社
		名称 KG510-VCO
		RX/TX BLOCK DIAGRAM
設計	製図	図番 3A-SA0021
		51BVCO05

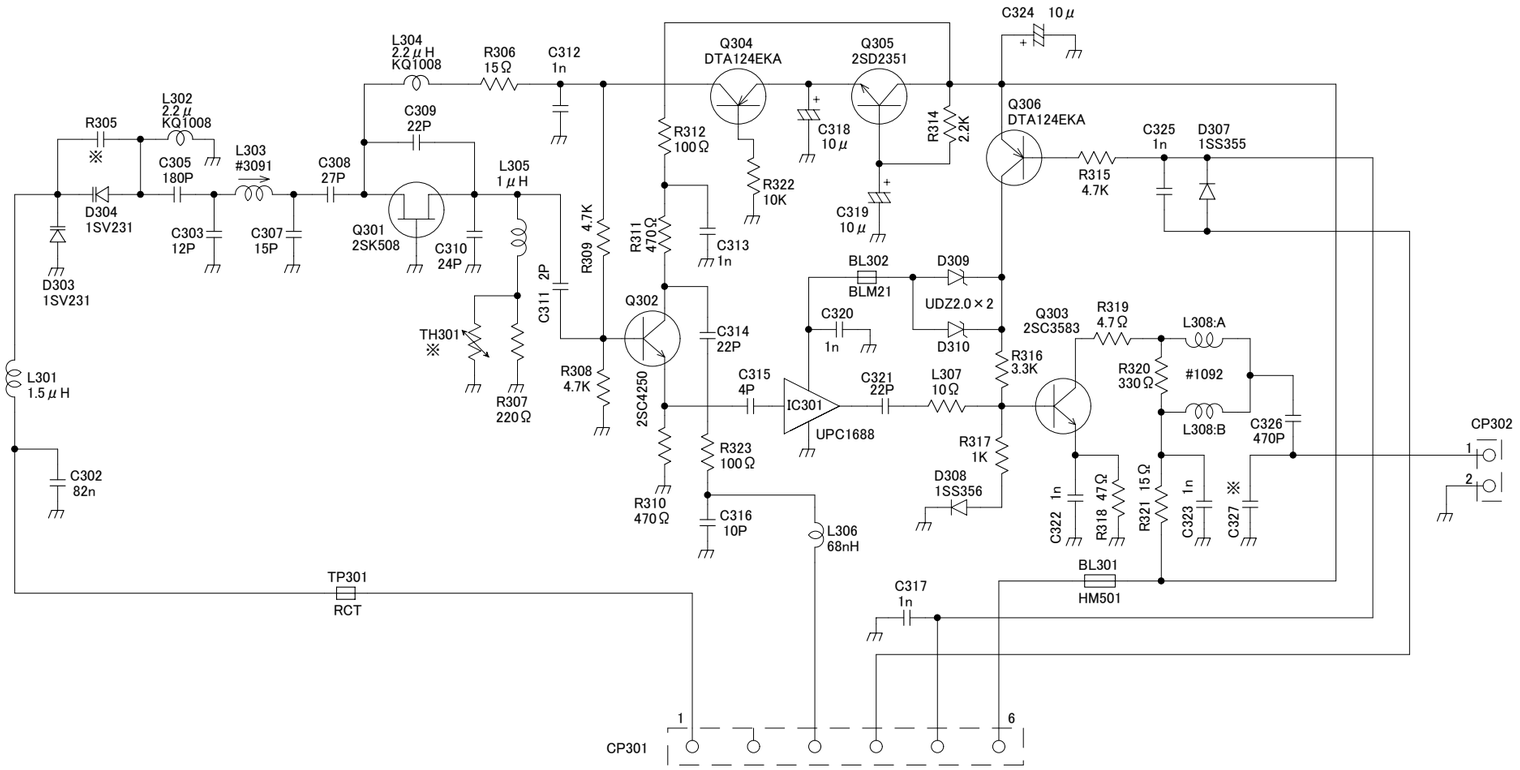

No					

66MHz---88MHz

承認	検図	協同通信機製造株式会社
		名称 KG510-08
		RX VCO UNIT CIRCUIT DIAGRAM
設計	製図	図番 3A-SA0039-1
		51RC812

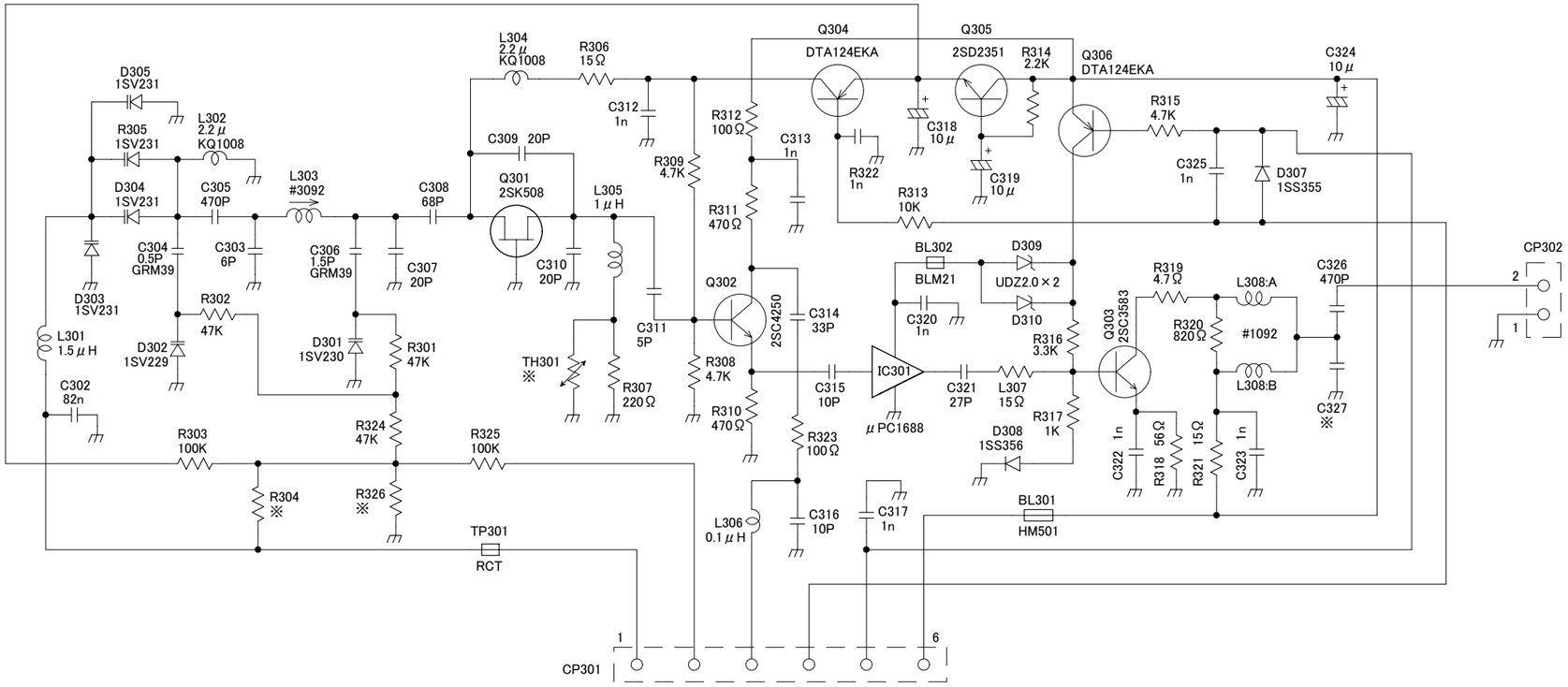

No					

66MHz---88MHz

承認	検図	協同通信機製造株式会社
		名称 KG510-08
		TX VCO UNIT CIRCUIT DIAGRAM
設計	製図	図番 3A-SA0040-2
		51TC821

51VC30Y-2

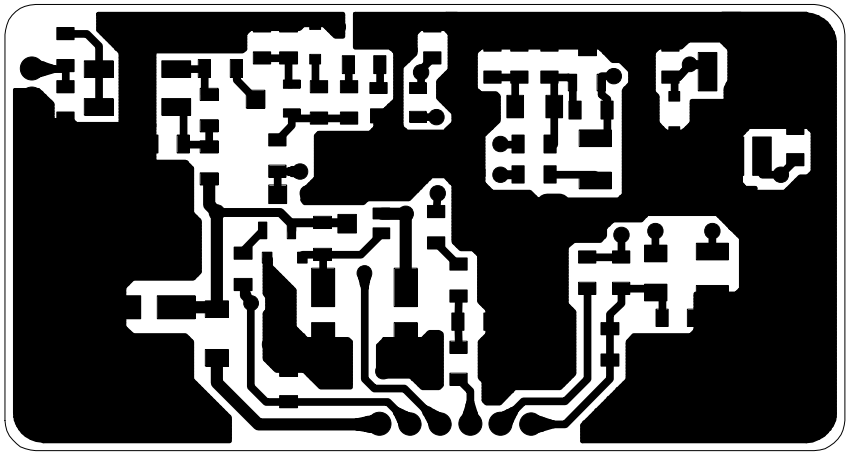

51VC30Y-2

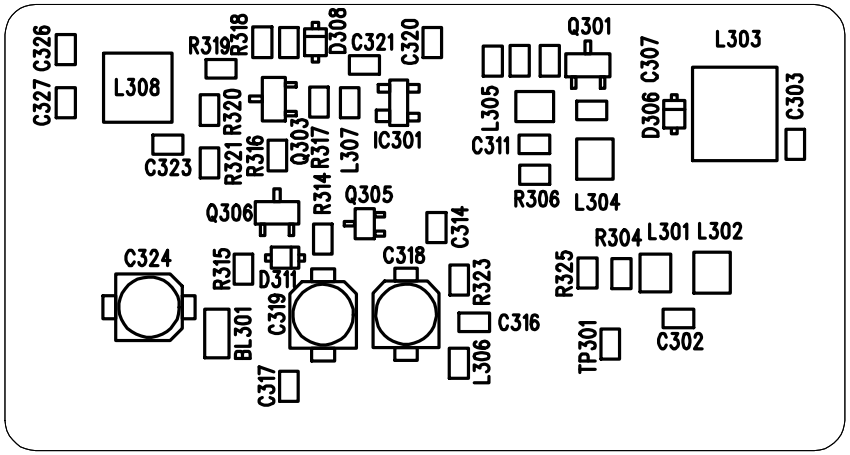
C326
C327
L308
R319
R318
D308
C321
C320
Q301
L303
C307
D306
C303
R320
Q303
R317
L307
IC301
L305
C311
R306
L304
C323
R321
R316
R314
Q306
Q305
C314
R304
L301
L302
C324
R315
D311
C318
R323
R325
C319
BL301
C316
TP301
C302
L306
C317

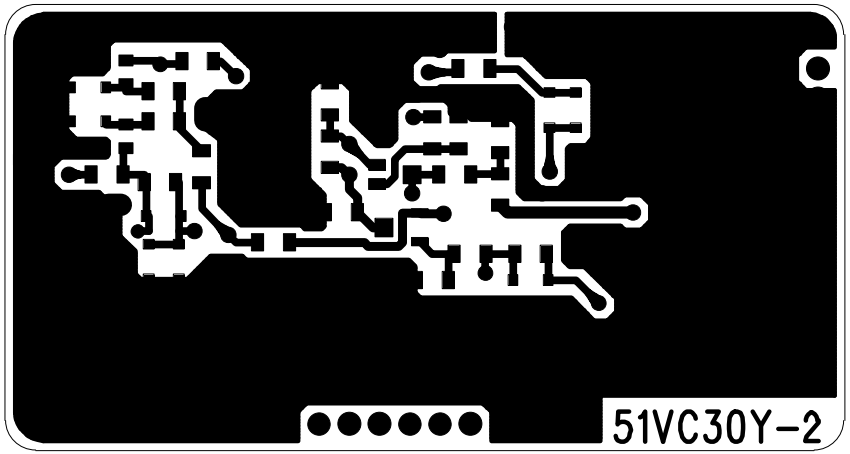
51VC30Y-2

51VC30Y-2

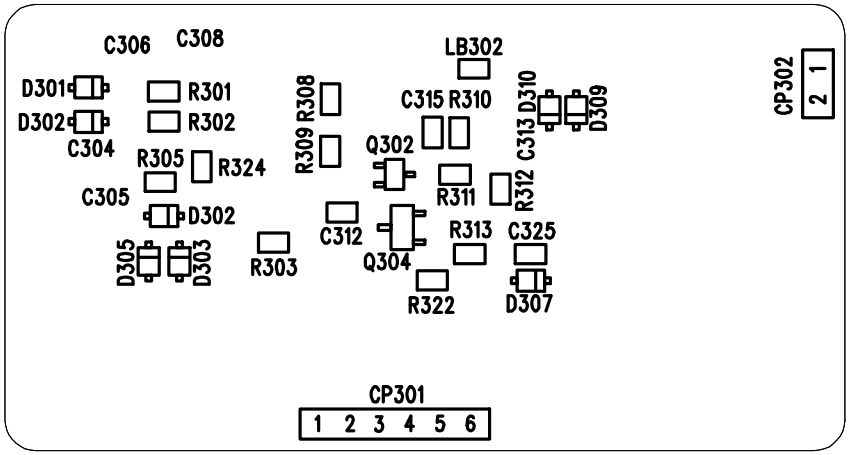
C306
C308
LB302
D301
R301
R308
C315
R310
D310
D309
CP302
2
1
D302
R302
C304
R309
Q302
C313
R305
R324
R311
R312
C305
D302
C312
R313
C325
D305
D303
R303
Q304
R322
D307
CP301
1 2 3 4 5 6

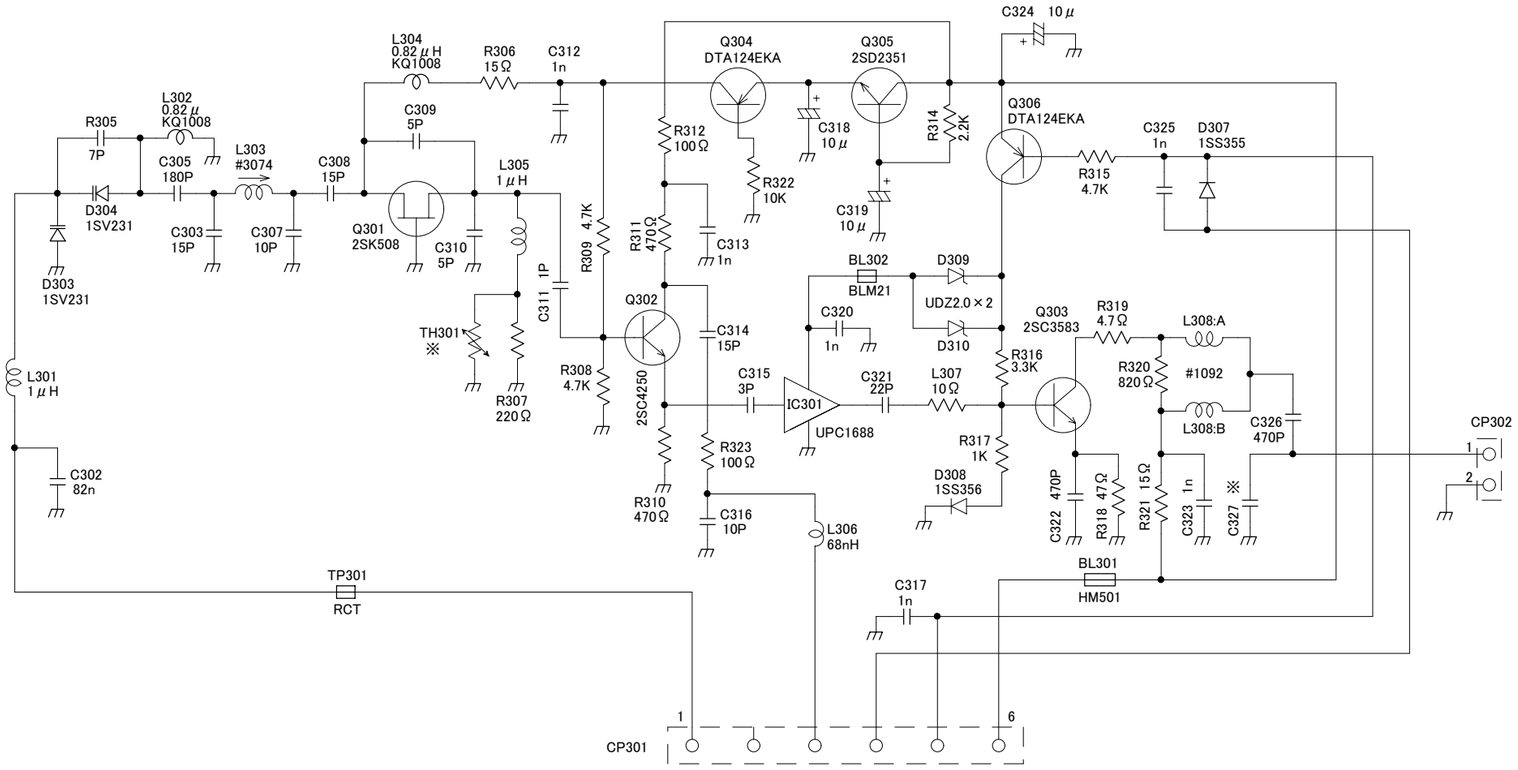

No	A				
C303	20P				
C305	270P				
C307	12P				
C308	22P				
C309	7P				
C310	7P				

承認	検図	協同通信機製造株式会社
		名称 KG510-15B
		RX VCO UNIT CIRCUIT DIAGRAM
設計	製図	図番 3A-SA0011-6
		51RCV13

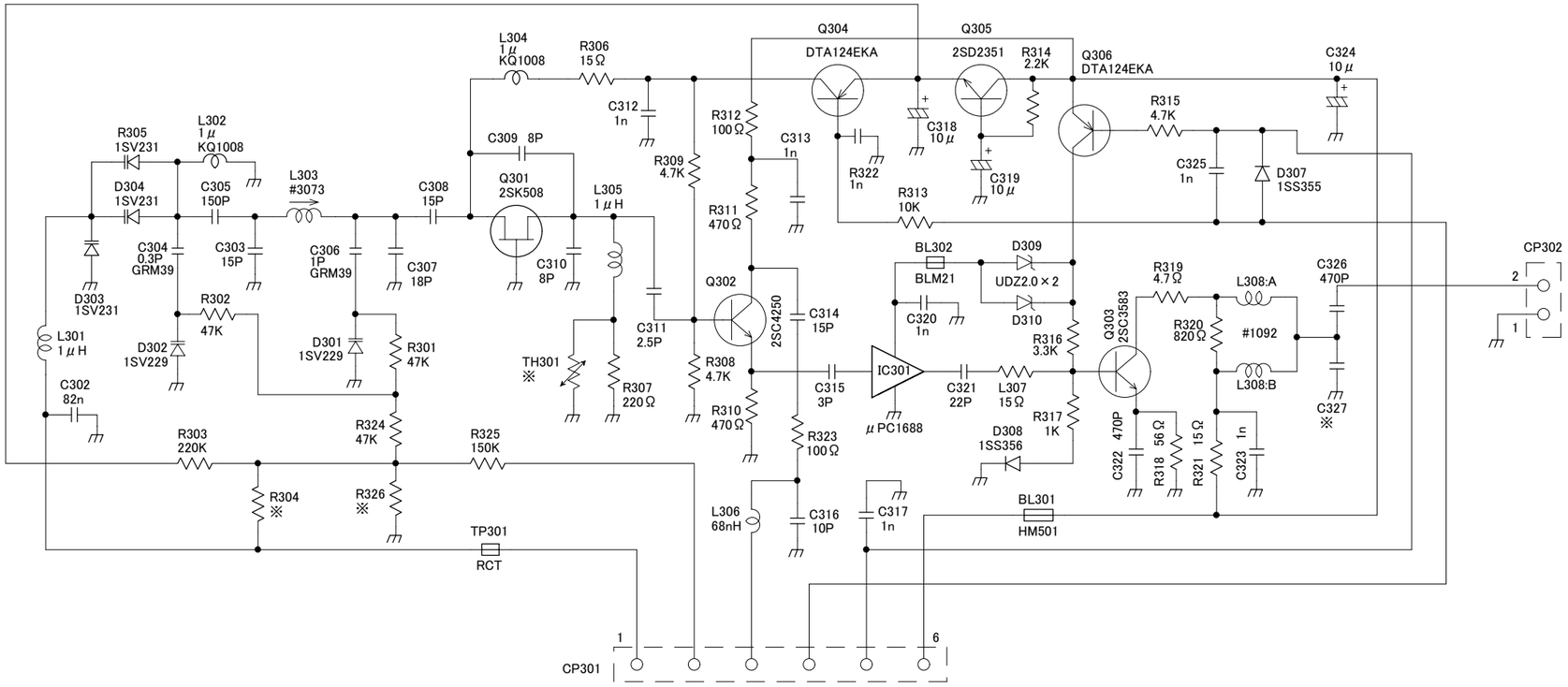

No	A				
C303	22P				
C305	270P				
C307	22P				
C308	20P				
C309	10P				
C310	10P				
R303	330K				

承認	検図	協同通信機製造株式会社
		名称 KG510-15B
		TX VCO UNIT CIRCUIT DIAGRAM
設計	製図	図番 3A-SA0013-6
		51TCV13

51VCU86-1

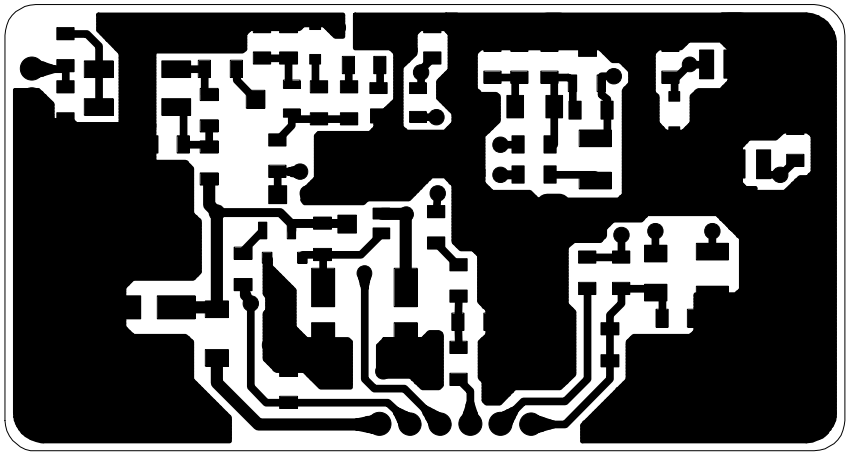

51VCU86-1

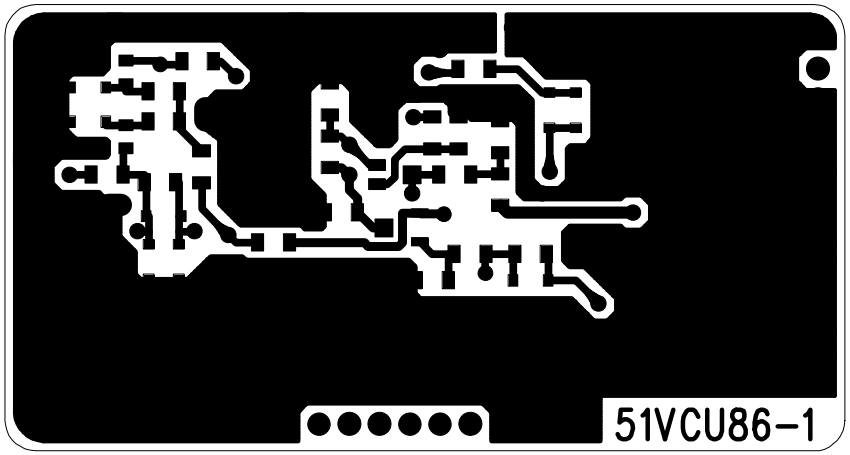

51VCU86-1

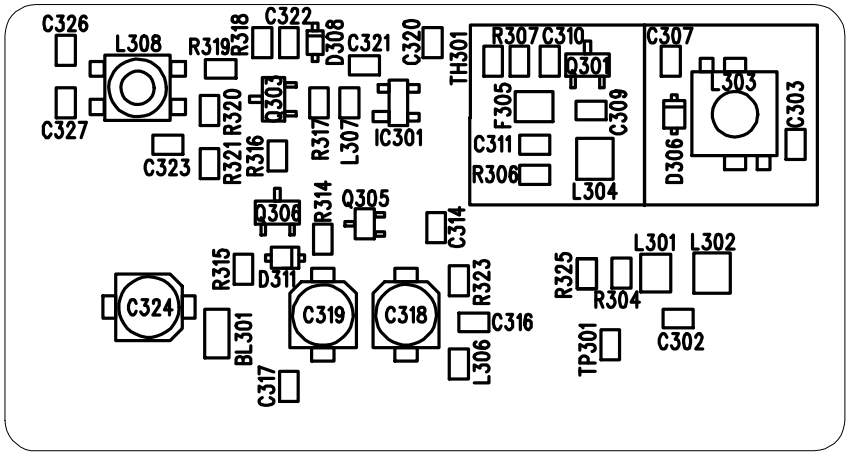
C326
L308
R319
R318
C322
D308
C321
C320
TH301
R307
C310
Q301
C307
L303
C303
C327
R320
Q303
R317
L307
IC301
F305
C309
C311
R306
L304
D306
C323
R321
R316
Q306
R314
Q305
C314
R315
D311
C324
BL301
C319
C318
R323
C316
L306
C317
R325
R304
L301
L302
C302
TP301

51VCU86-1

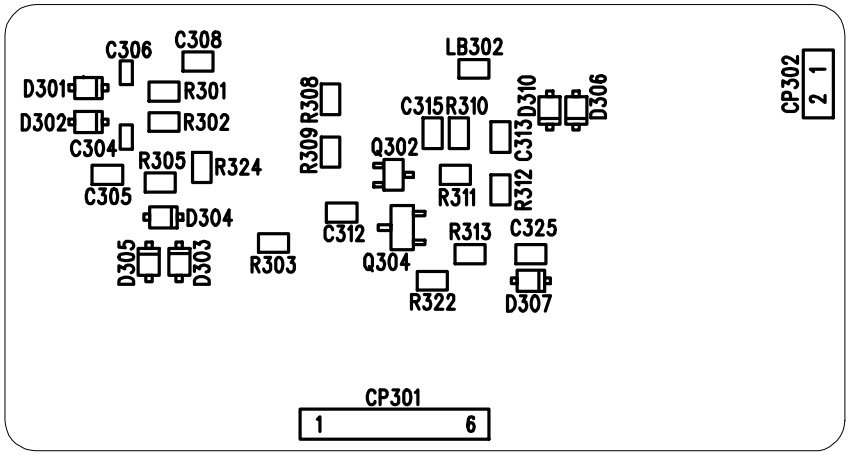
C306
C308
D301
R301
D302
R302
C304
R305
R324
C305
D304
D305
D303
R303
R308
R309
LB302
C315
R310
D310
D306
C313
Q302
R311
R312
C312
Q304
R313
C325
R322
D307
CP302
2 1
CP301
1
6

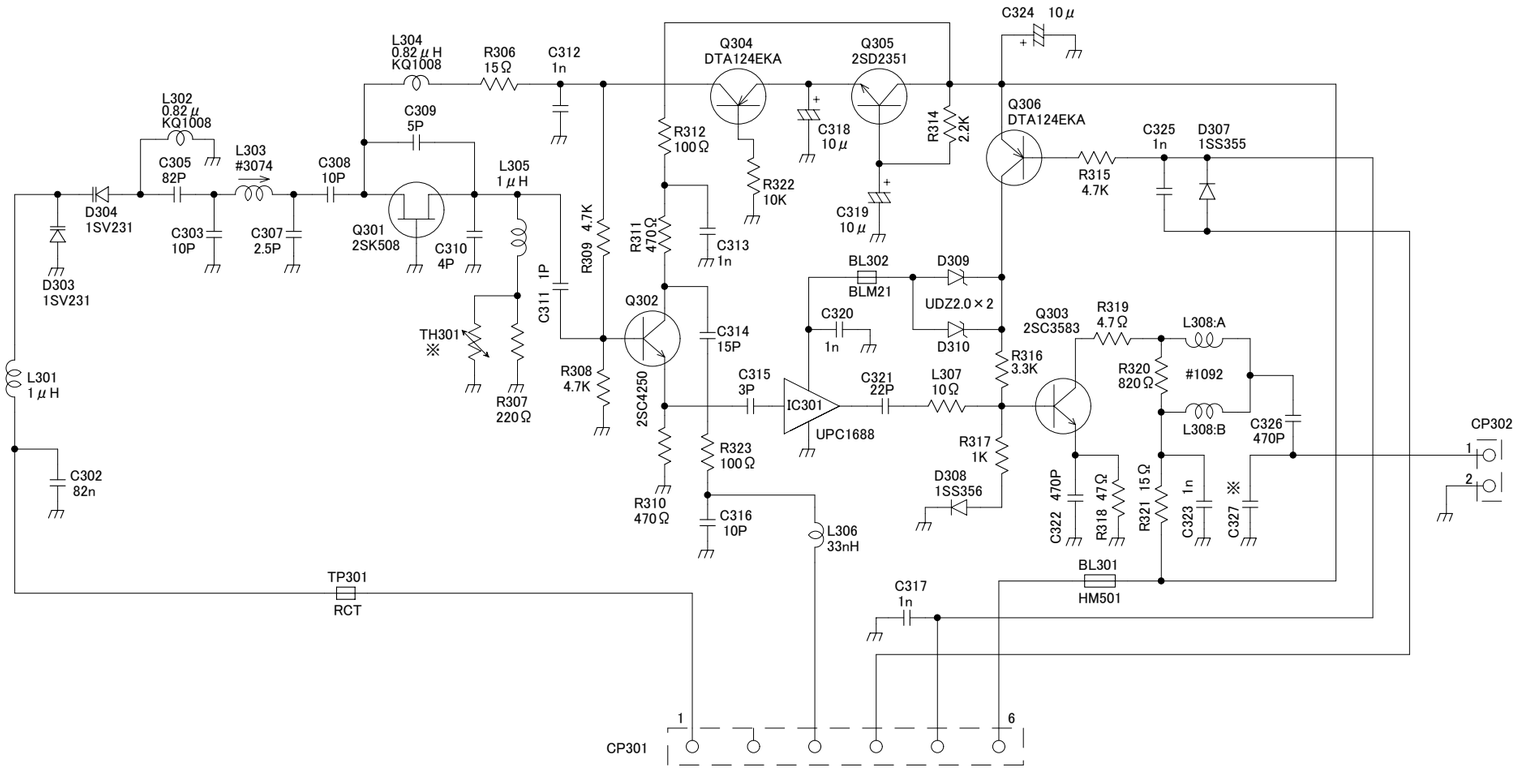

No	A	B			
C303	12P	11P			
C305	120P	100P			
C307	7P	4P			
C310	5P	5P			

承認	検図	協同通信機製造株式会社
		名称 KG510-20C
		RX VCO UNIT CIRCUIT DIAGRAM
設計	製図	図番 3A-SA0049-2
		51RC221

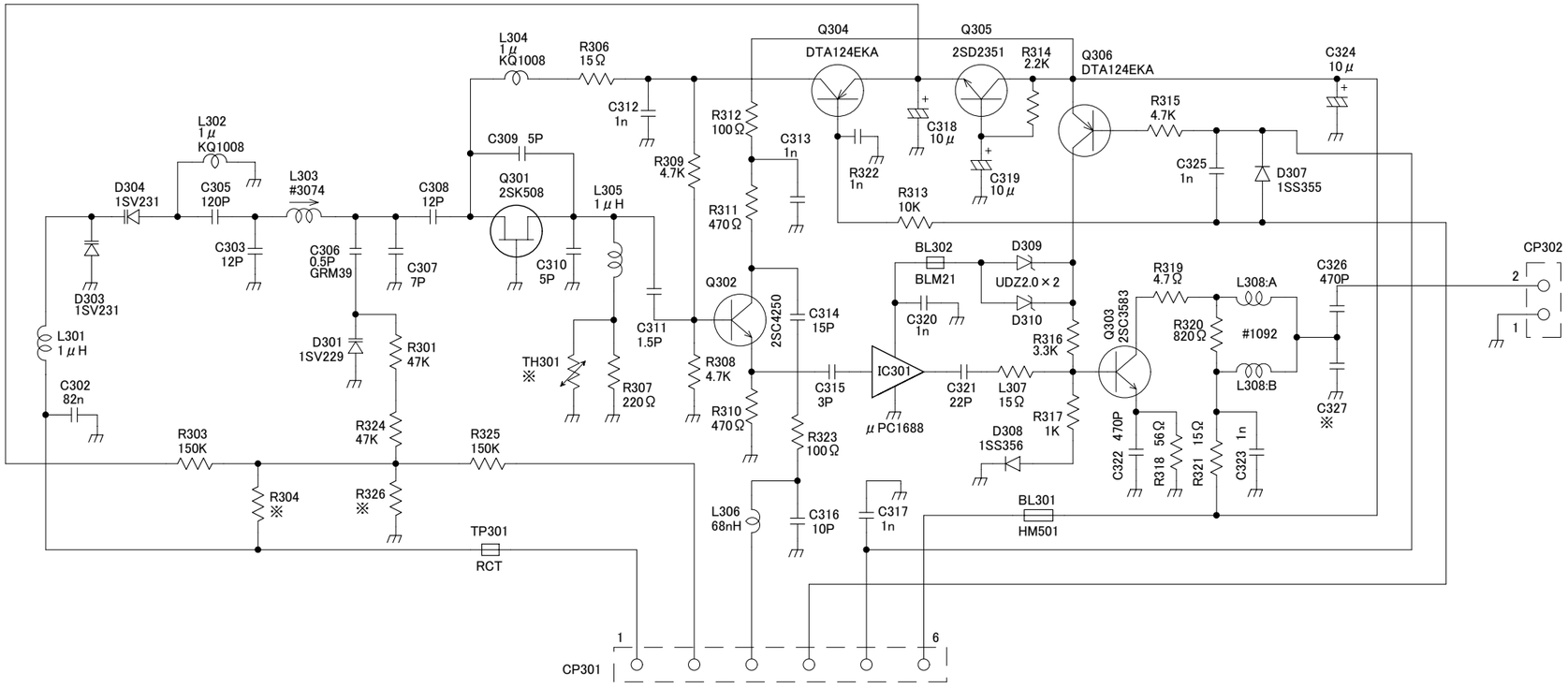

No	A	B			
C303	12P	15P			
C305	220P	220P			
C306	0.75P	0.75P			
C307	11P	11P			
C308	15P	15P			
C309	6P	6P			
C310	6P	5P			
C311	2P	2P			
L303	#3073	#3074			
R303	150K	100K			

承認	検図	協同通信機製造株式会社
		名称 KG510-20C
		TX VCO UNIT CIRCUIT DIAGRAM
設計	製図	図番 3A-SA0050-2
		51TC221

51VCU86-1

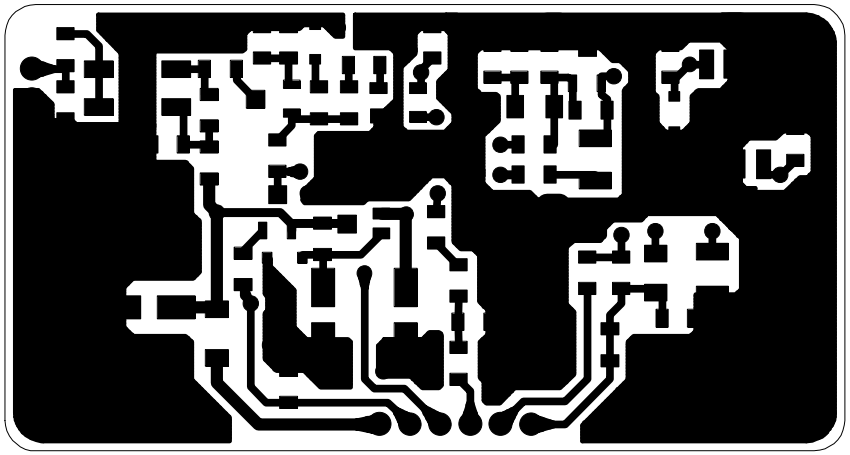

51VCU86-1

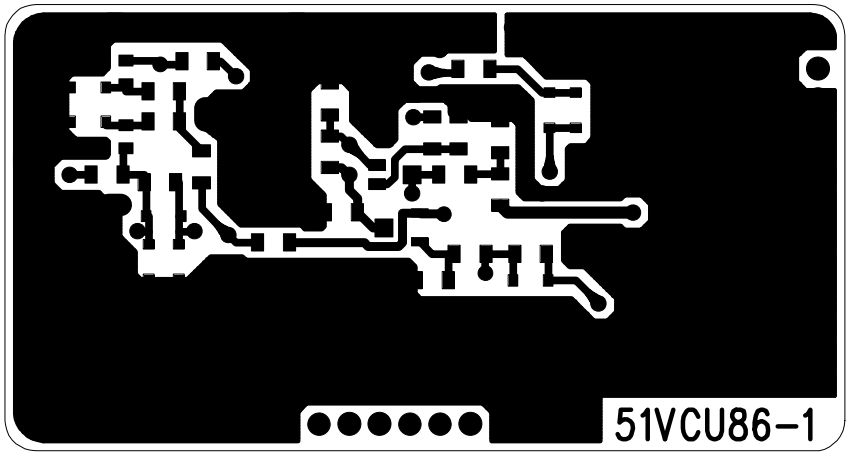

51VCU86-1

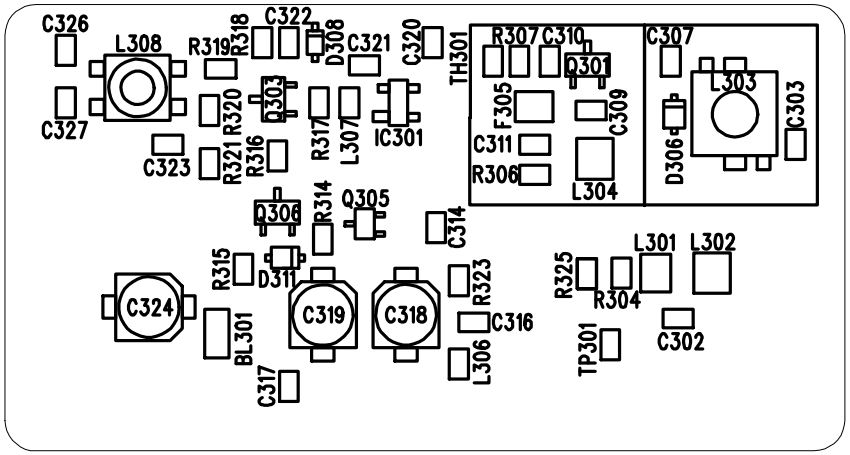
C326
L308
R319
R318
C322
D308
C321
C320
TH301
R307
C310
Q301
C307
L303
C303
C327
R320
Q303
R317
L307
IC301
F305
C309
C311
R306
L304
D306
C323
R321
R316
Q306
R314
Q305
C314
R315
D311
C324
BL301
C319
C318
R323
C316
L306
C317
R325
R304
L301
L302
C302
TP301

51VCU86-1

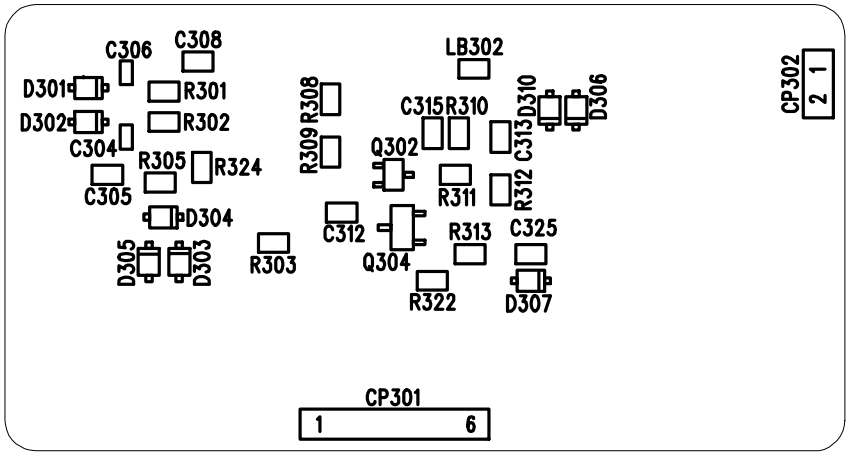
C306
C308
D301
R301
D302
R302
C304
R305
R324
C305
D304
D305
D303
R303
R308
R309
LB302
C315
R310
D310
D306
C313
Q302
R311
R312
C312
Q304
R313
C325
R322
D307
CP302
2 1
CP301
1
6

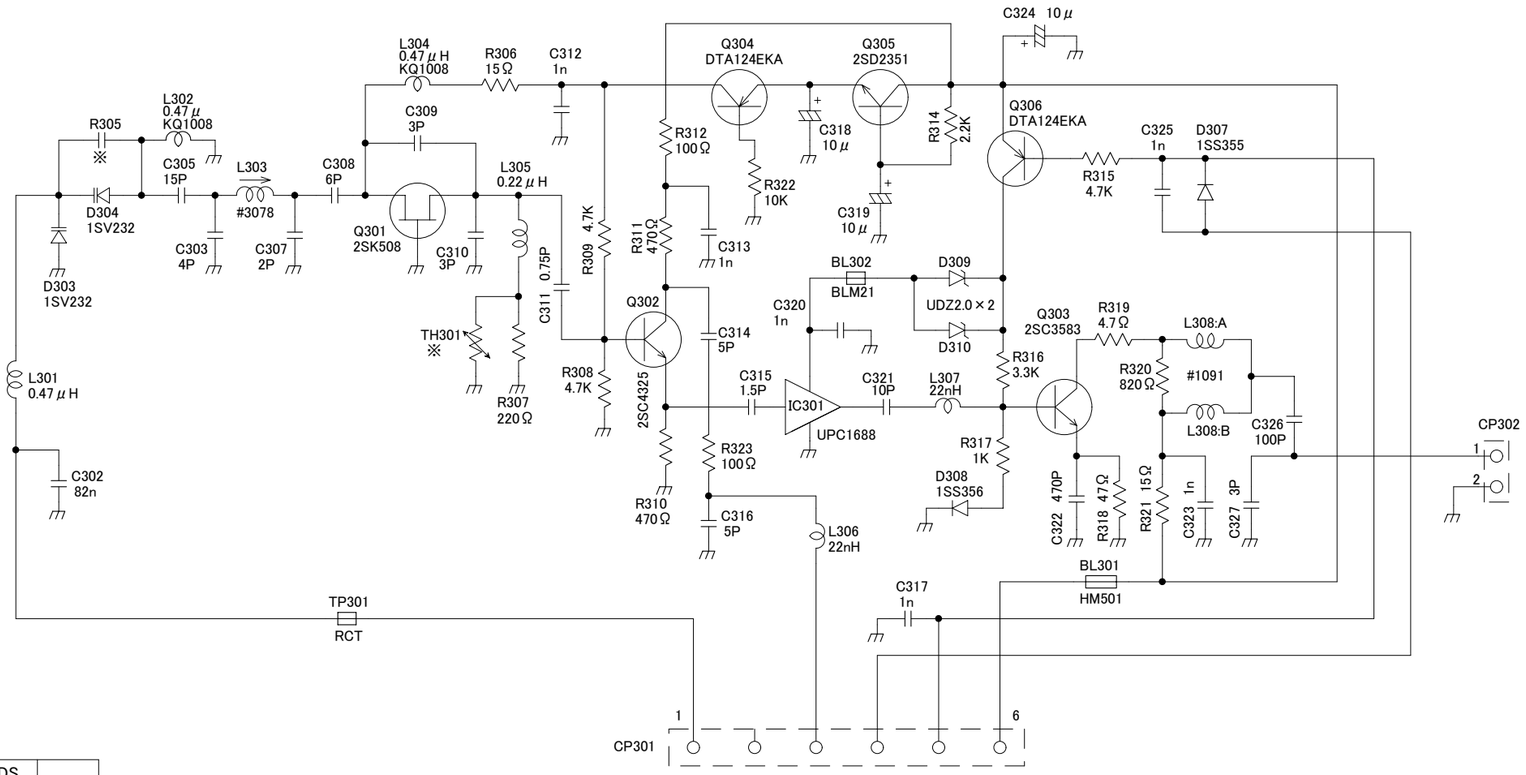

No	A	B	C	E	F	SA	DS	
C303	4P	4P	4P	3P	2.5P		4P	
C305	24P	22P	18P	10P	10P		12P	
C307	4P	3P	2.5P	1.5P	1P		3P	
C308	7P	6P	6P	6P	6P		6P	
C309	3P	3P	3P	3P	3P		3P	
C327	※	※	6P	3P	3P		6P	
L303	#3074	#3074	#3075	#3078	#3078		#3075	
L304	0.82μ	0.47μ	0.47μ	0.47μ	0.47μ		0.47μ	
L307	33nH	47nH	33nH	22nH	22nH		33nH	
L308	#1092	#1091	#1091	#1091	#1091		#1091	

承認	検図	協同通信機製造株式会社
		名称 KG510-40D
		RX VCO UNIT CIRCUIT DIAGRAM
設計	製図	図番 3A-SA0010-7
		51RCU21

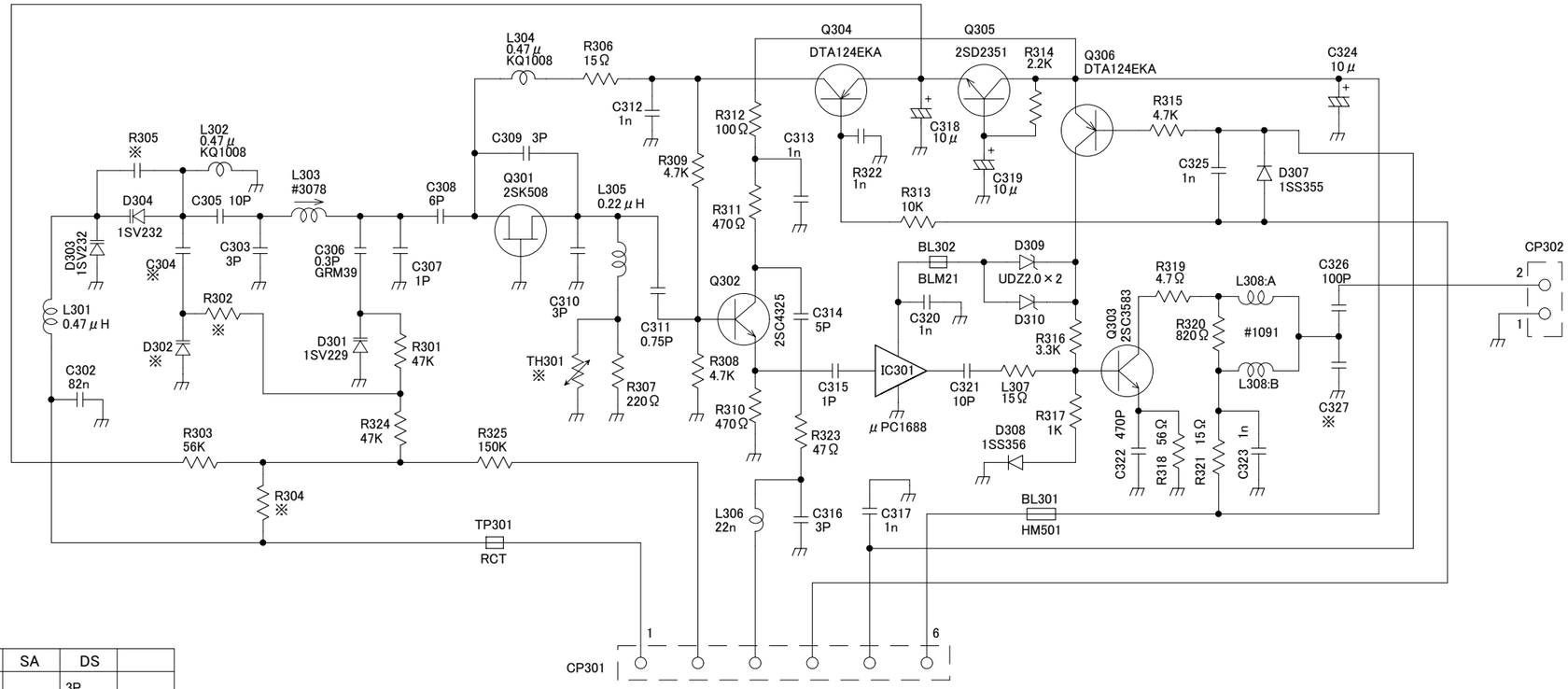

No	A	B	C	E	F	SA	DS	
C303	3P	3P	3P	2P	1.5P		3P	
C305	18P	12P	12P	8P	6P		8P	
C306	0.3P	0.3P	0.3P	0.3P	0.3P		0.3P	
C307	2.5P	2.5P	2P	0.75P	0.5P		2P	
C308	6P	6P	6P	6P	6P		6P	
C309	3P	3P	3P	3P	3P		3P	
R305	3P	1.5P	※	※	※		※	
R303	100K	68K	56K	47K	47K		56K	
R325	100K	150K	150K	150K	150K		150K	
L303	#3075	#3075	#3078	#3078	#3078		#3078	

承認	検図	協同通信機製造株式会社
		名称 KG510-40D
		TX VCO UNIT CIRCUIT DIAGRAM
設計	製図	図番 3A-SA0012-6
		51TCU21

ECAM II V 4.5 : Thu Dec 13 16:46:09 2001 - 51vcu8~1.pcb : art0130.pho

51VCU86-1

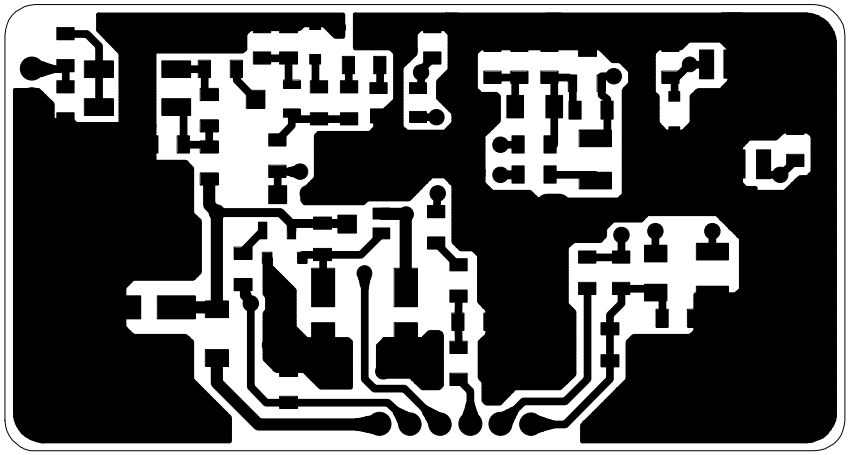

部品面　パターン

ECAM II V 4.5 : Thu Dec 13 16:46:09 2001 - 51vcu8~1.pcb : art0230.pho

51VCU86-1

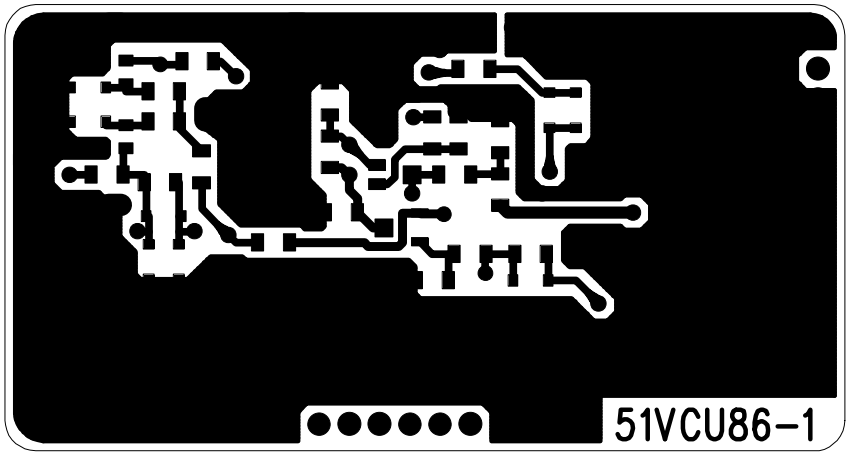

半田面　パターン

ECAM II V 4.5 : Thu Dec 13 16:46:09 2001 - 51vcu8~1.pcb : gen0109.pho

51VCU86-1

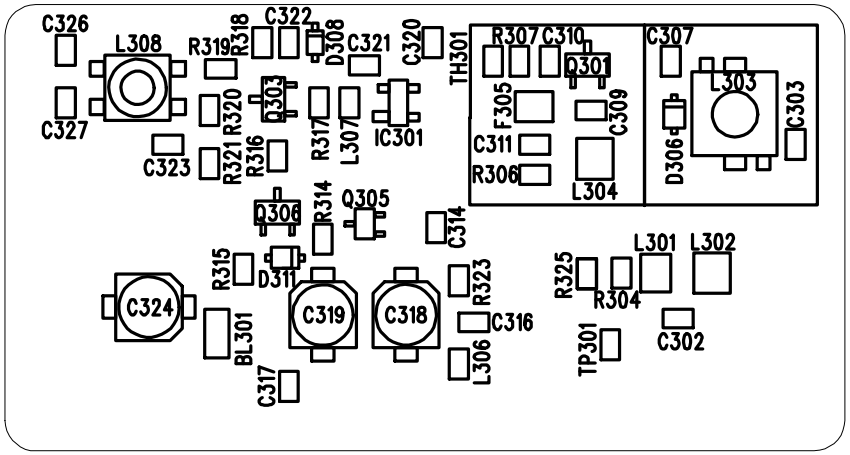

ECAM II V 4.5 : Thu Dec 13 16:46:09 2001 - 51vcu8~1.pcb : gen0110.pho

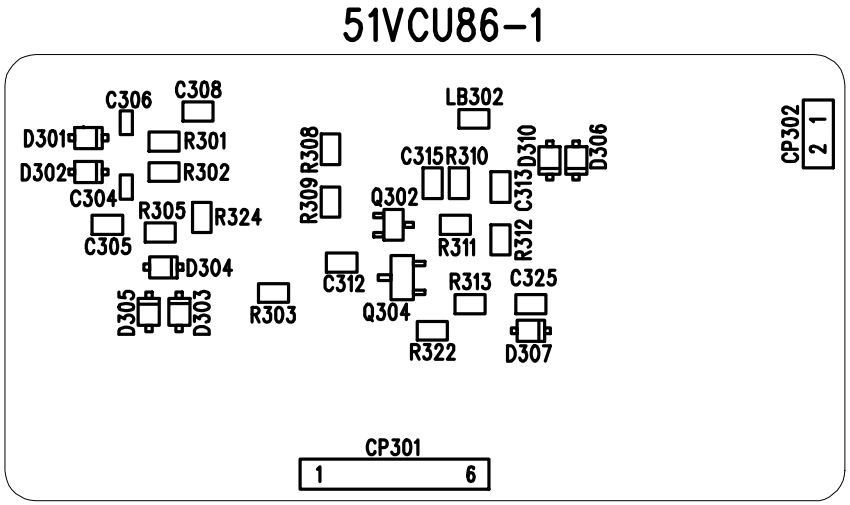

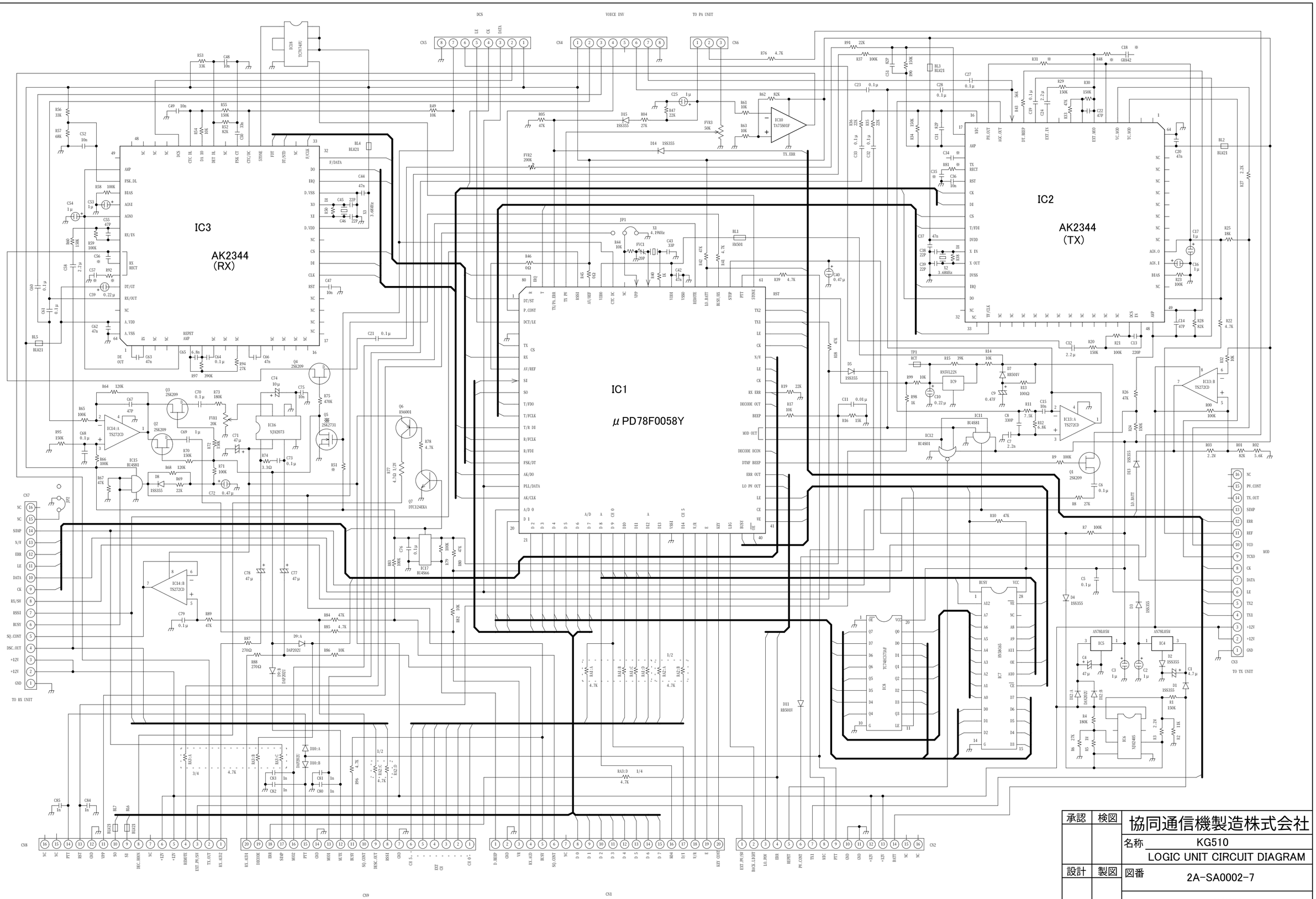

承認	検図	協同通信機製造株式会社
		名称 KG510
		LOGIC UNIT CIRCUIT DIAGRAM
設計	製図	図番 2A-SA0002-7
		51LOG0Y

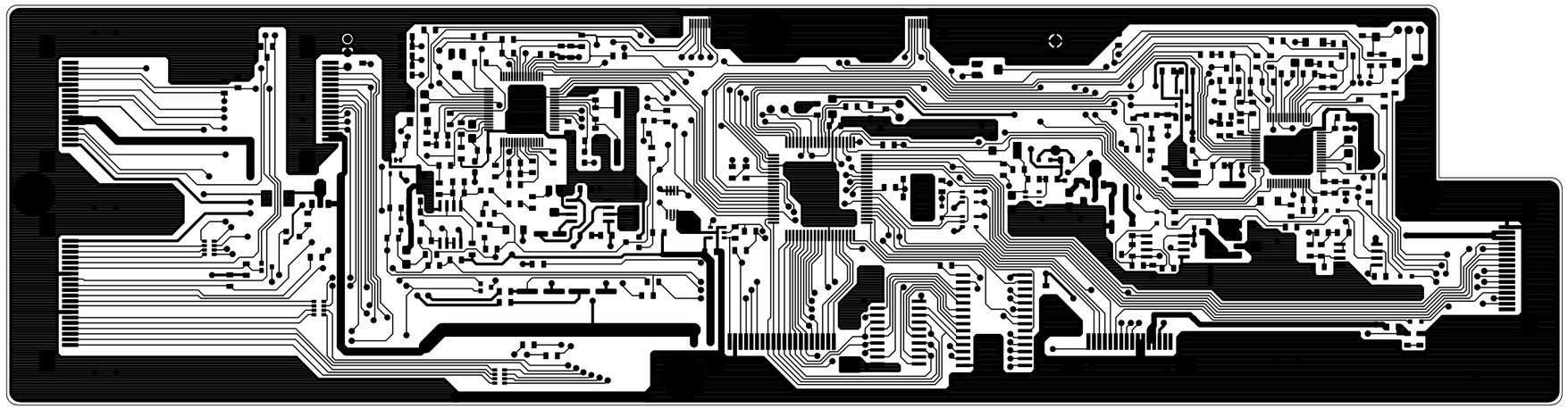

51LOG87-4

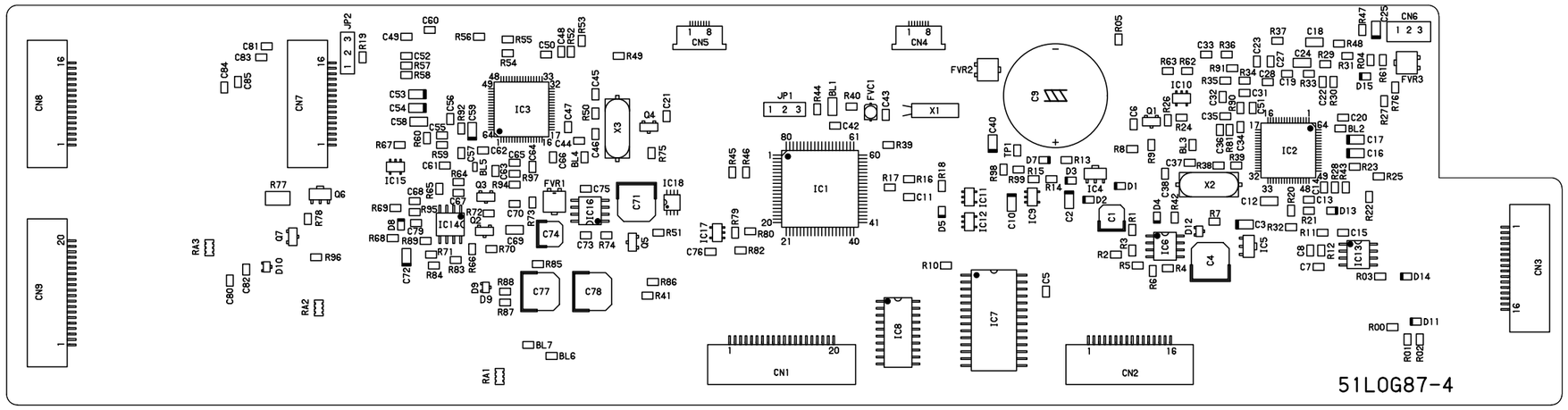
CN1
CN2
CN3
CN4
CN5
CN6
CN7
CN8
CN9
IC1
IC2
IC3
IC7
IC8
X1
X2
X3
51L0G87-4

51L0G87-4

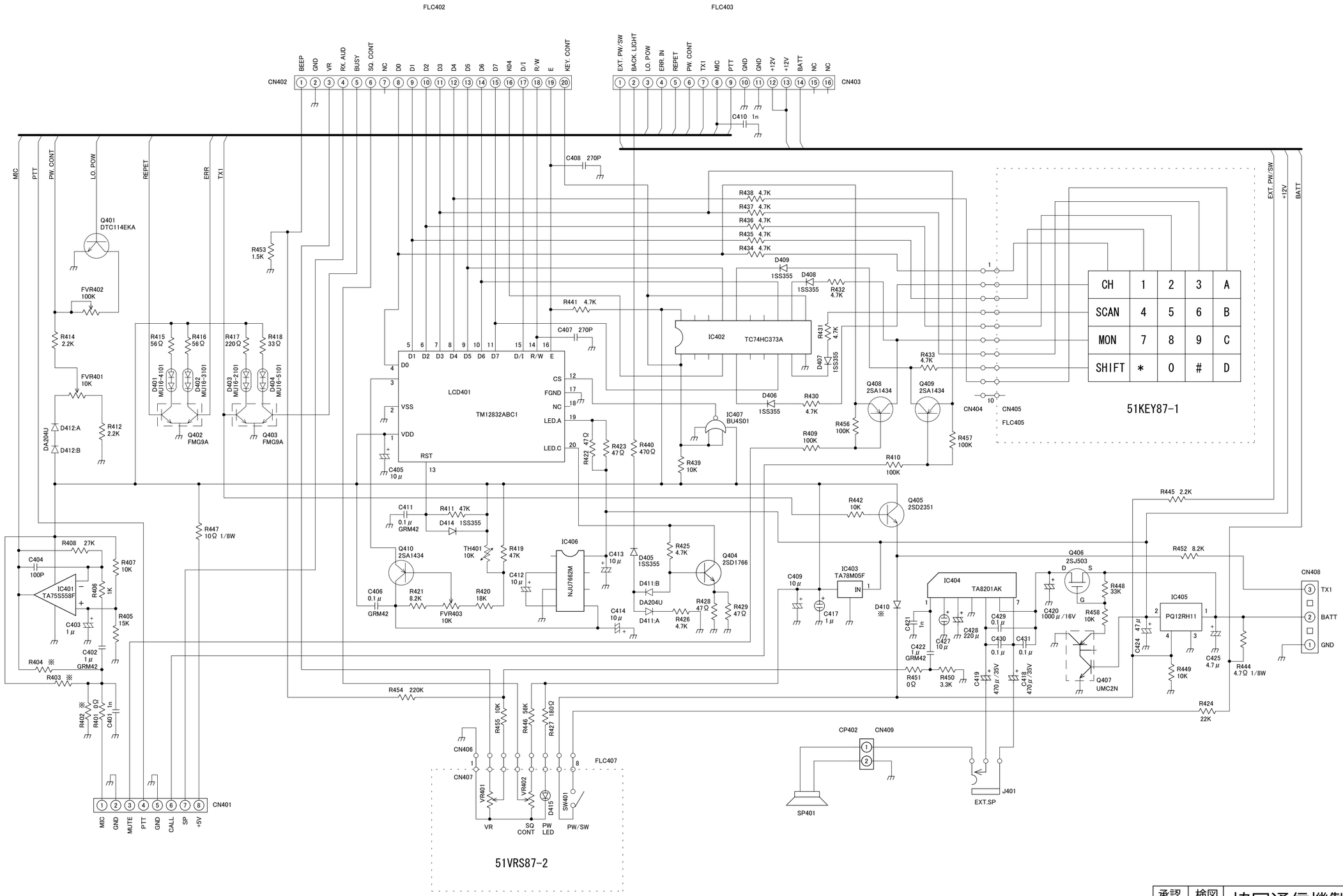

承認	検図	協同通信機製造株式会社
		名称 KG510 (5W AUDIO) FRONT UNIT CIRCUIT DIAGRAM
設計	製図	図番 2A-SA0001-7
		51FOR14

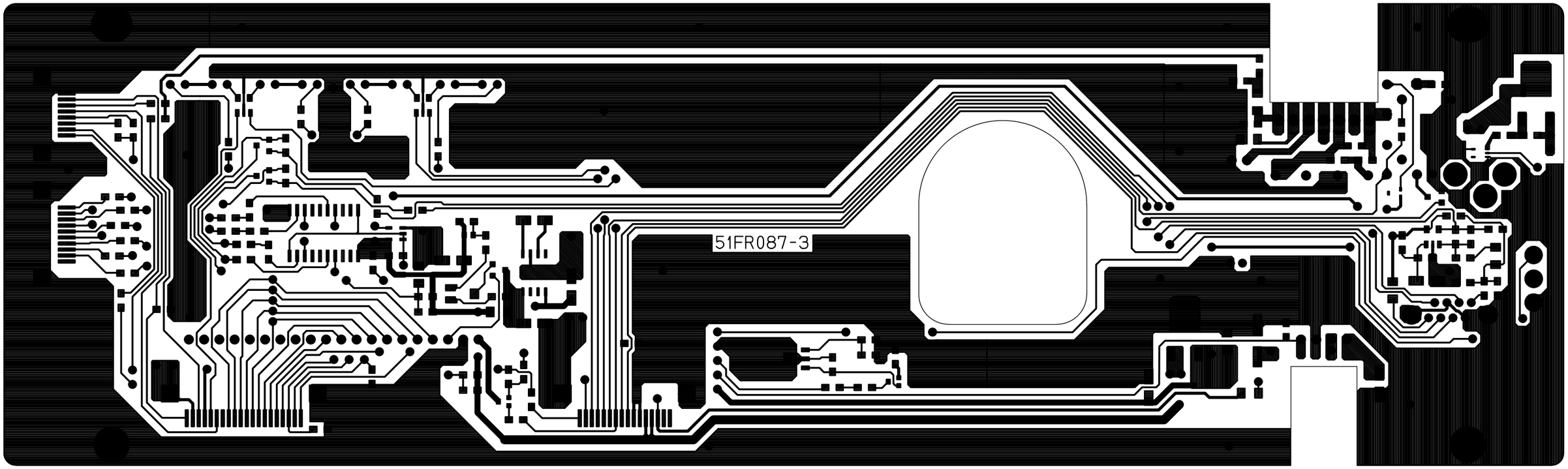

51FR087-3

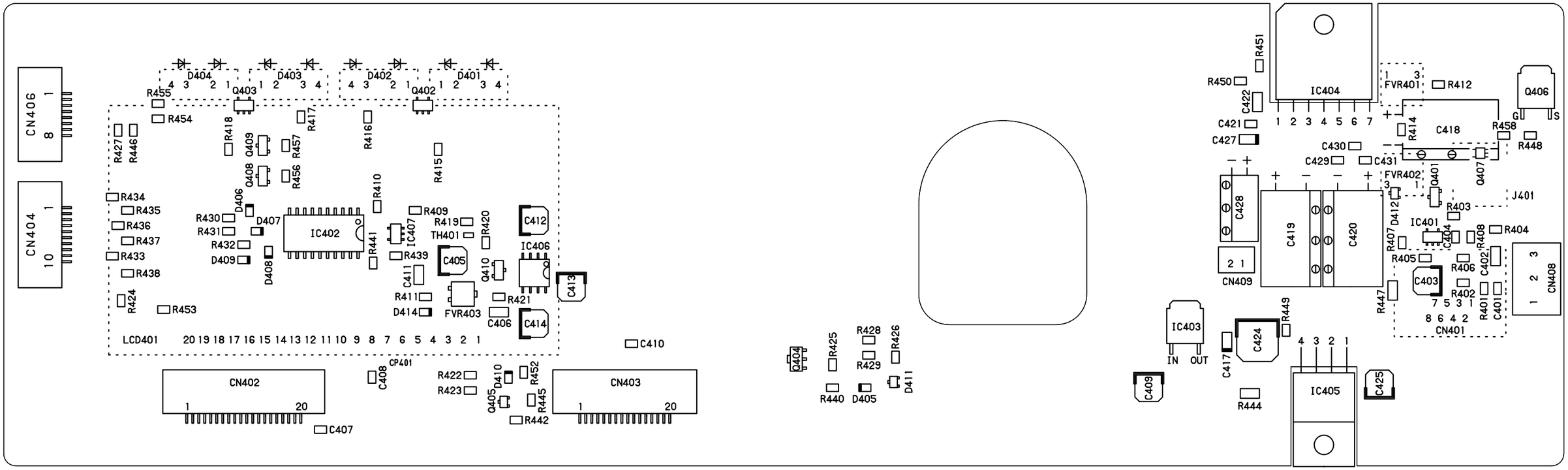
CN406
CN404
D404
D403
D402
D401
Q403
Q402
R455
R454
R418
R417
R416
R427
R446
R409
R419
R420
TH401
C412
IC406
C405
C413
IC402
IC407
R441
R439
R411
D414
FVR403
C406
C414
R421
Q410
R434
R435
R436
R437
R433
R438
R424
R453
R430
R431
R432
D409
D407
D406
D408
R457
R456
Q409
Q408
R410
R415
LCD401
CP401
C408
C410
CN402
CN403
C407
R422
R423
D410
Q405
R452
R445
R442
Q404
R425
R428
R429
R426
R440
D405
D411
C409
IC403
IN
OUT
C417
C424
R449
R444
IC405
C425
R451
R450
C422
C421
C427
IC404
FVR401
R412
Q406
R414
C418
R458
R448
C430
C429
C431
FVR402
Q401
Q407
J401
R403
C428
C419
C420
D412
IC401
C404
R408
R404
R407
R405
R406
C402
C403
R402
R401
C401
CN409
CN401
CN408
R447

51FR087-3

51KEY87-1

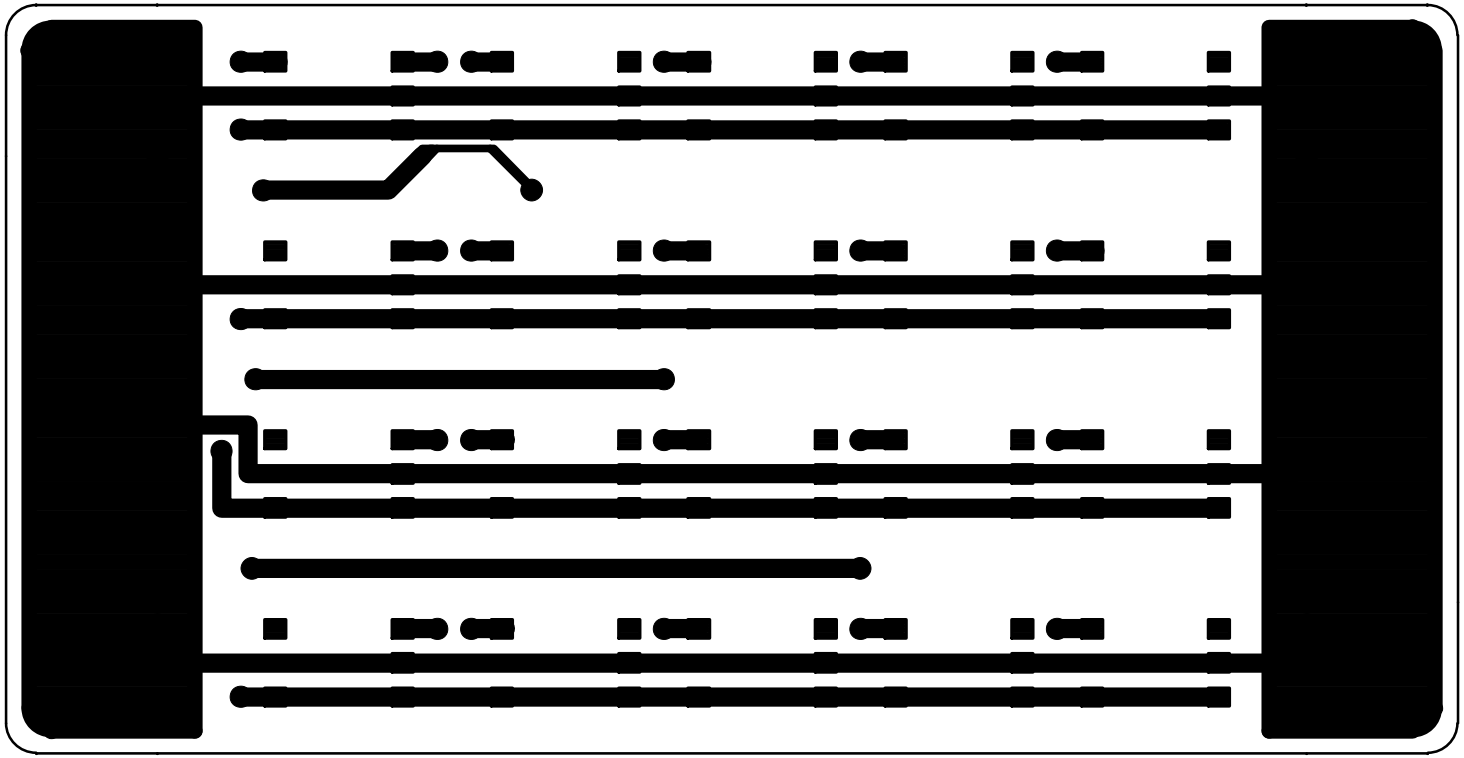

L1

51KEY87-1

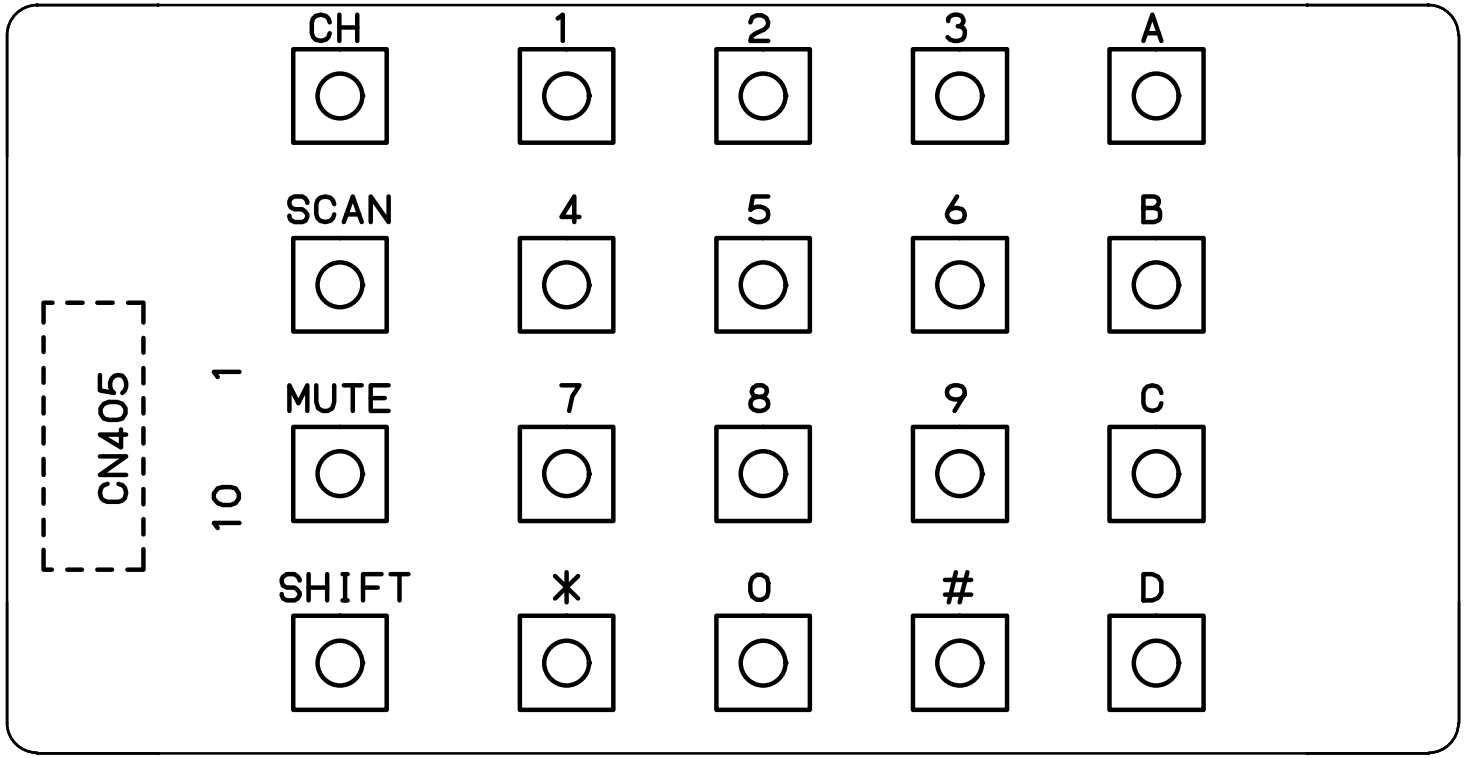

ぶひんめんシルク

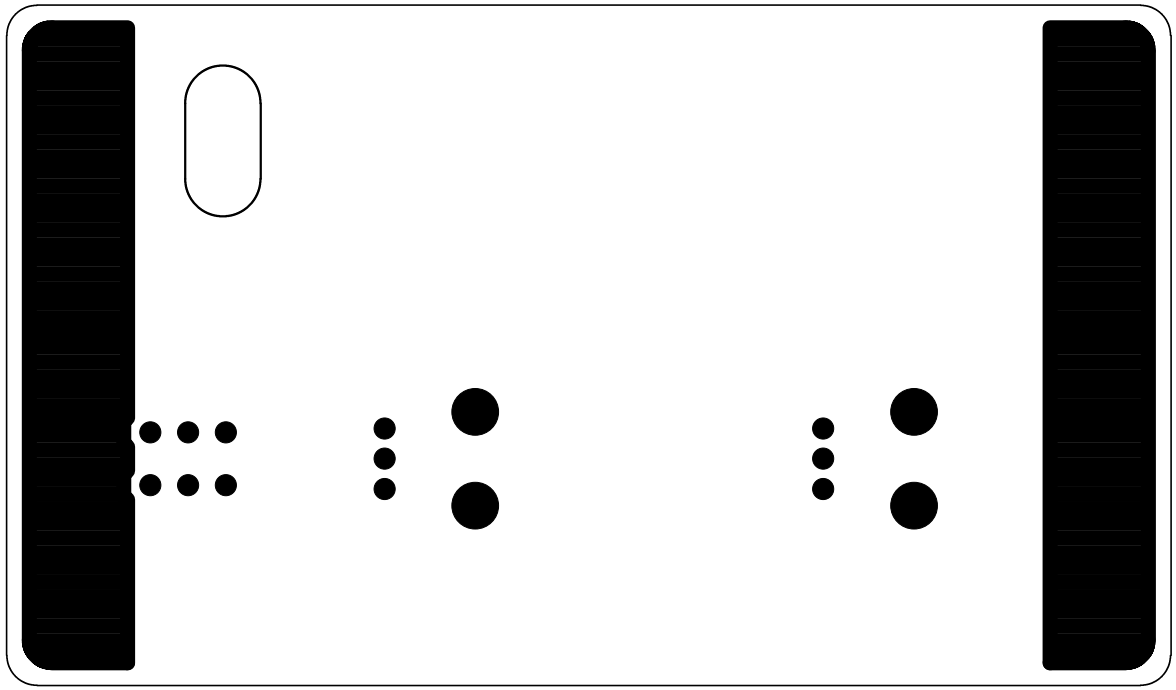

51VRS87−2　　部品面パターン

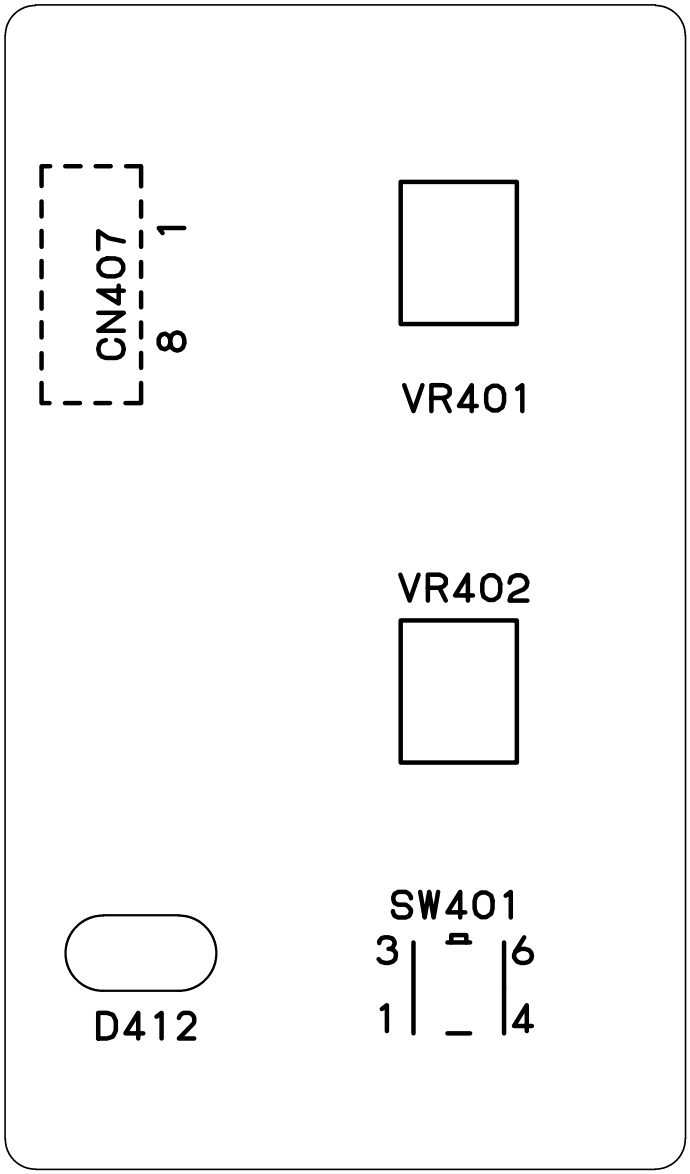

51VRS87-2

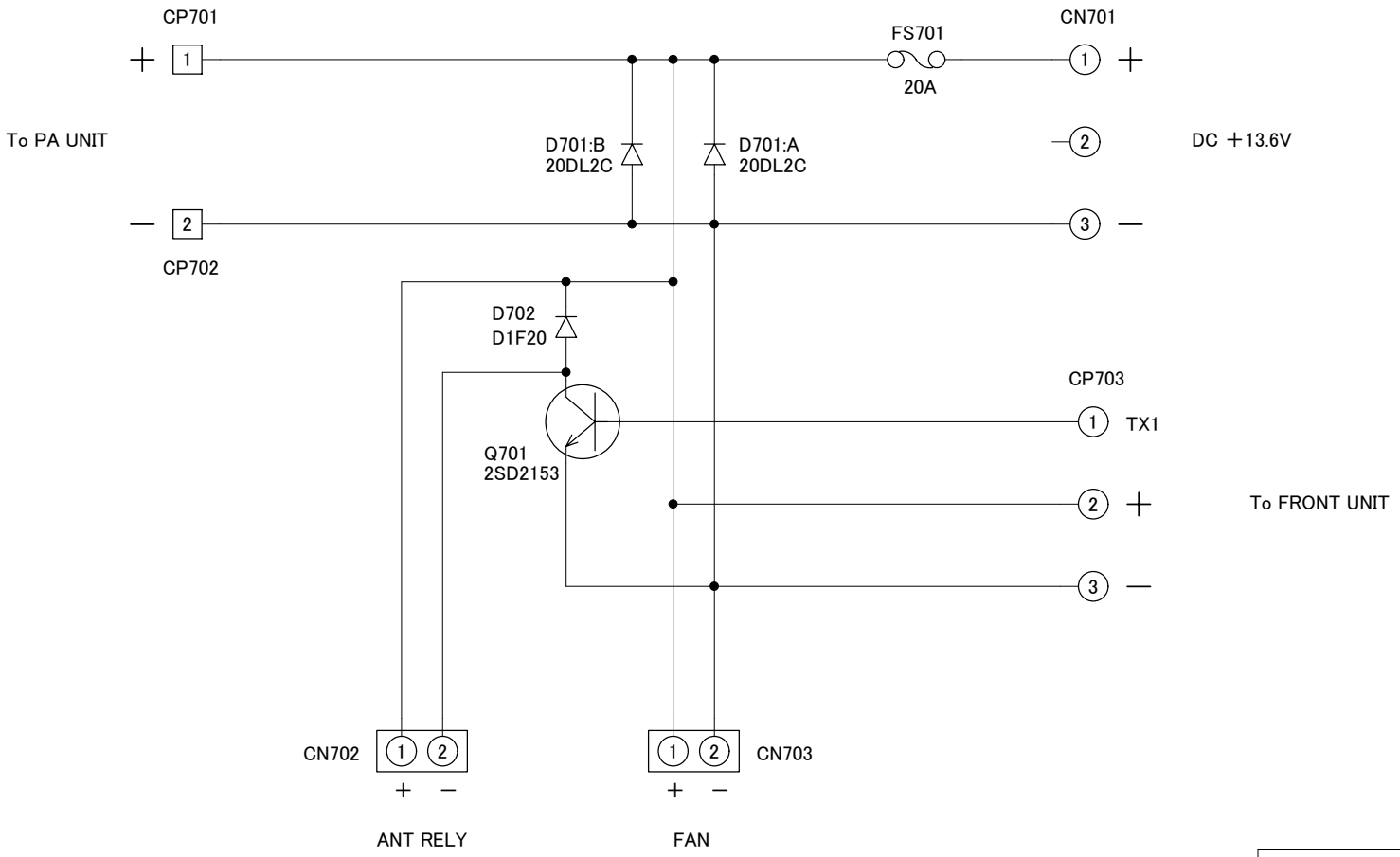

協同通信機製造株式会社	
名称	KG510-DC
図番	4A-SA0014-2
FILE	51DC14

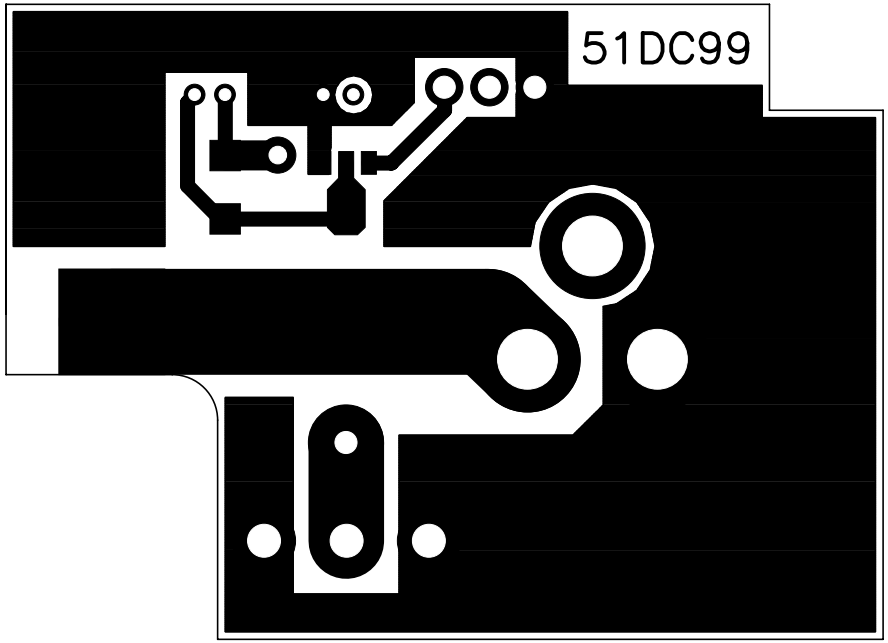
51DC99

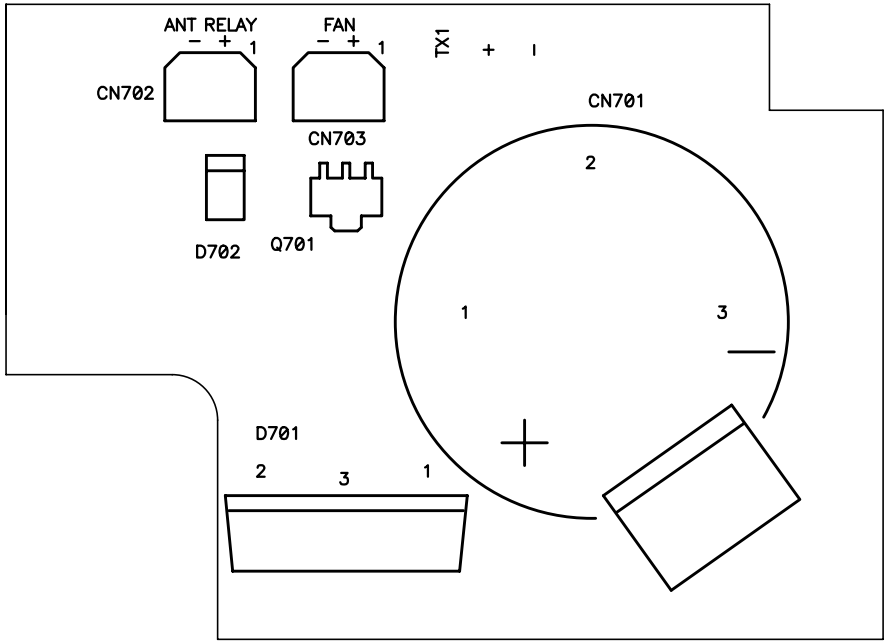
ANT RELAY
− + 1
CN702
FAN
− + 1
CN703
TX1
+ 1
CN701
2
1
3
D702
Q701
D701
2
3
1

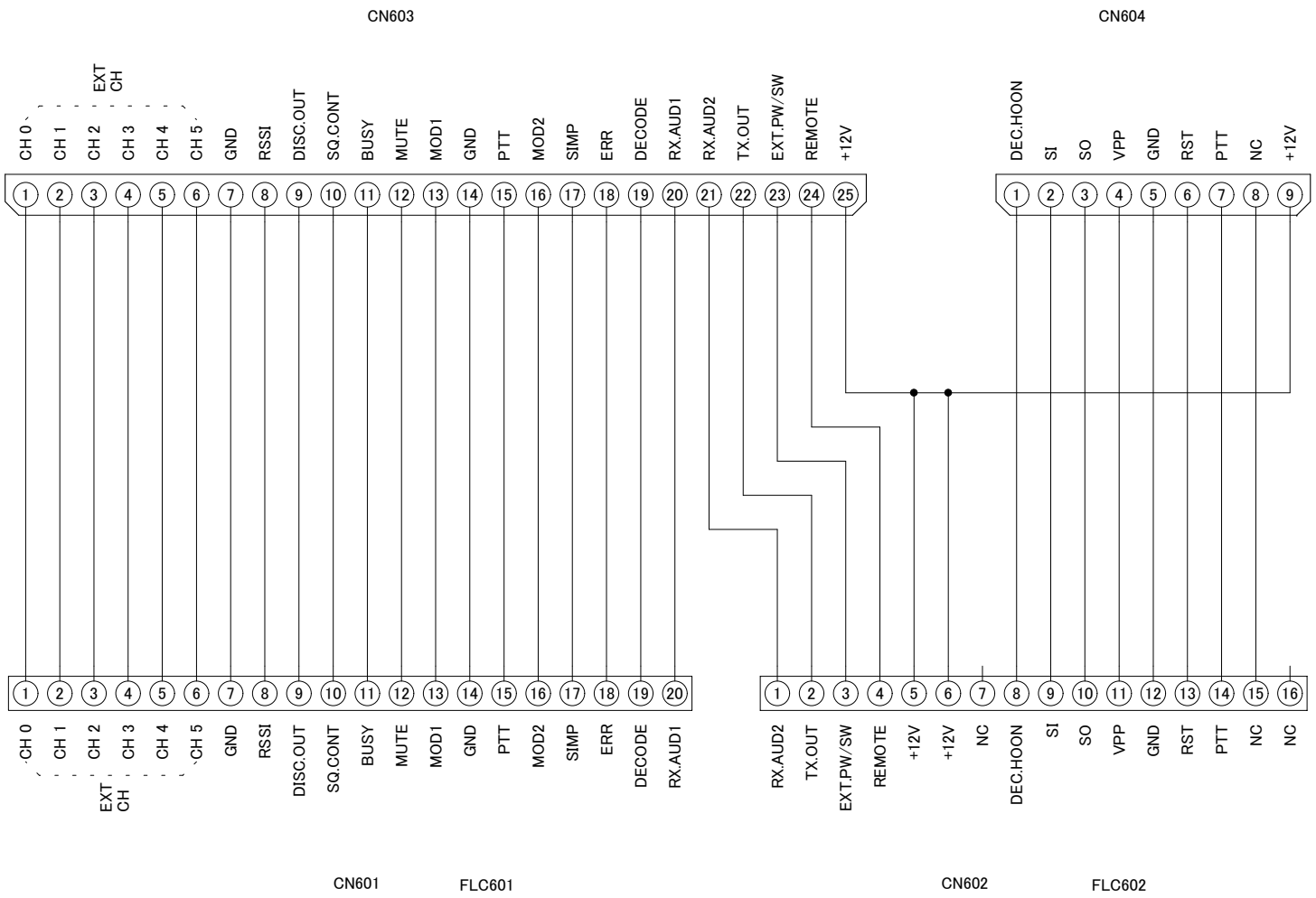

協同通信機製造株式会社	
名称	KG510-EXT.TERMINAL
図番	4A-SA0015-1
FILE	51DSUB9X

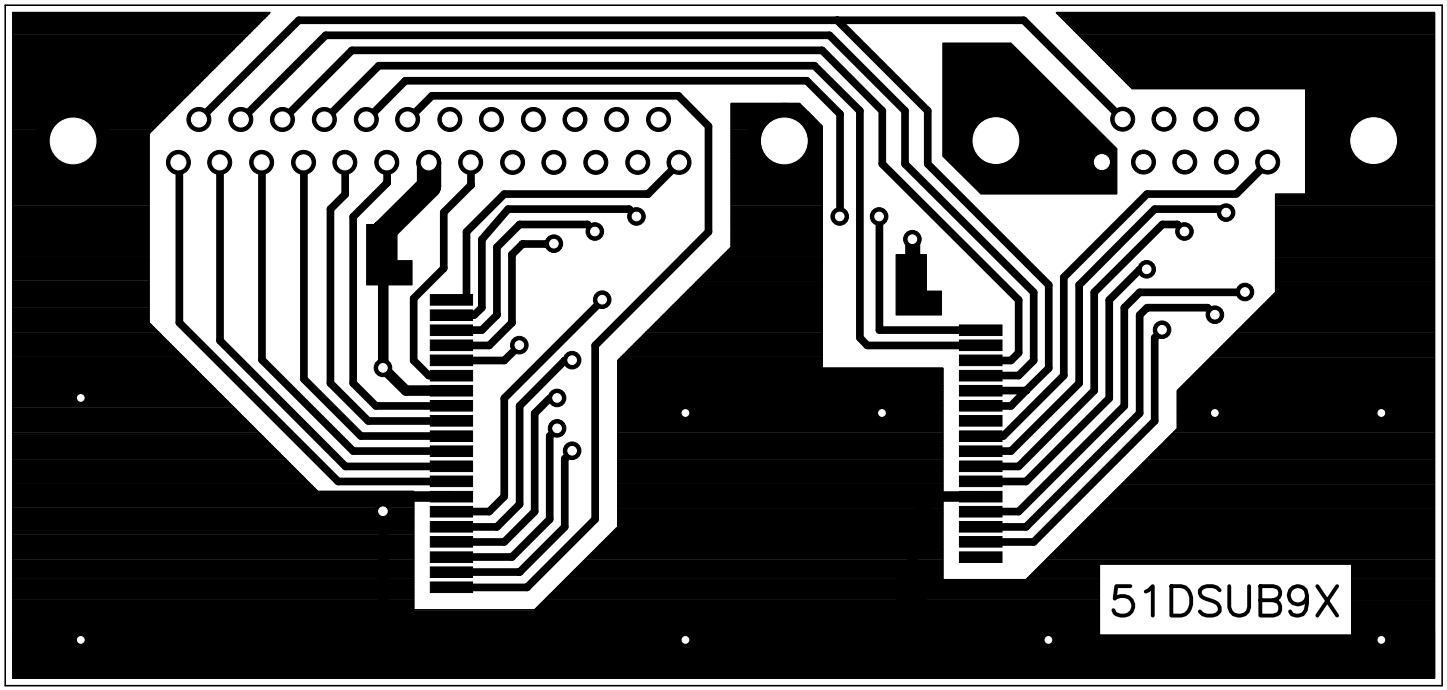
51DSUB9X

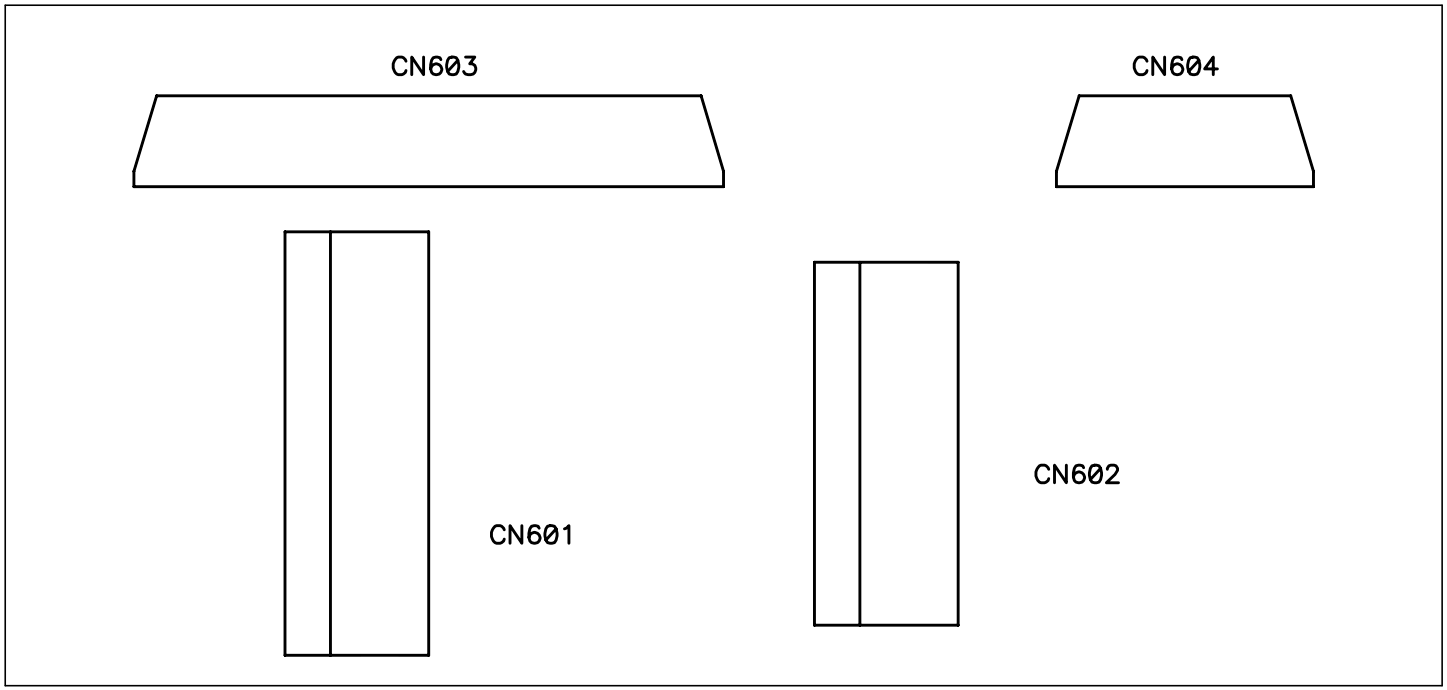
CN603
CN604
CN601
CN602

UNIT NAME	PARTS NAME	DESCRIPTION	PARTS NO	QUTY
TX MAIN UNIT/80	CHIP IC	AN78L05M	IC201	1
TX MAIN UNIT/80	CHIP IC	TA78M05F-TE16L	IC202	1
TX MAIN UNIT/80	CHIP IC	TS272CD	IC203	1
TX MAIN UNIT/80	CHIP IC	TA75S01F-TE85R	IC204	1
TX MAIN UNIT/80	CHIP IC	MB1511PFV-G-BND-EF	IC205	1
TX MAIN UNIT/80	CHIP IC	NJU7662M-T1	IC206	1
TX MAIN UNIT/80	CHIP IC	BU4S66-TR	IC207	1
TX MAIN UNIT/80	CHIP IC	M5237ML-600C	IC208	1
TX MAIN UNIT/80	CHIP IC	NJM2904M-T1	IC209	1
TX MAIN UNIT/80	CHIP COIL	FBMH3216HM501NT	BL201	1
TX MAIN UNIT/80	CHIP COIL	FBMH3216HM501NT	BL202	1
TX MAIN UNIT/80	CHIP COIL	BLM21B421SPT	BL203	1
TX MAIN UNIT/80	CHIP COIL	BLM21B421SPT	BL204	1
TX MAIN UNIT/80	CHIP COIL	BLM21B421SPT	BL205	1
TX MAIN UNIT/80	CHIP COIL	FBMH3216HM501NT	BL206	1
TX MAIN UNIT/80	CHIP COIL	BLM21B421SPT	BL207	1
TX MAIN UNIT/80	CHIP ELECTROLYT	MVK16VC10M D55	C201	1
TX MAIN UNIT/80	CHIP TANTALUM	ECST1AY475R	C202	1
TX MAIN UNIT/80	CHIP TANTALUM	ECST1CY105R	C203	1
TX MAIN UNIT/80	CHIP CAPACITOR	GRM40CH101J50PT	C204	1
TX MAIN UNIT/80	CHIP CAPACITOR	GRM42-6B105K16NPT	C205	1
TX MAIN UNIT/80	CHIP CAPACITOR	GRM40CH470J50PT	C207	1
TX MAIN UNIT/80	CHIP TANTALUM	ECST1VY224R	C208	1
TX MAIN UNIT/80	CHIP CAPACITOR	GRM42-6B105K16NPT	C209	1
TX MAIN UNIT/80	CHIP CAPACITOR	GRM40B102K50PT	C210	1
TX MAIN UNIT/80	CHIP CAPACITOR	GRM40B473K25PT	C211	1
TX MAIN UNIT/80	CHIP ELECTROLYT	MVK16VC10M D55	C212	1
TX MAIN UNIT/80	CHIP ELECTROLYT	MVK16VC10M D55	C213	1
TX MAIN UNIT/80	CHIP CAPACITOR	GRM40B473K25PT	C214	1
TX MAIN UNIT/80	CHIP CAPACITOR	GRM40CH221J50PT	C215	1
TX MAIN UNIT/80	CHIP CAPACITOR	GRM40CH100D50PT	C217	1
TX MAIN UNIT/80	CHIP CAPACITOR	GRM40B153K50PT	C218	1
TX MAIN UNIT/80	CHIP TANTALUM	ECST1CY225R	C219	1
TX MAIN UNIT/80	CHIP CAPACITOR	GRM40B153K50PT	C220	1
TX MAIN UNIT/80	CHIP ELECTROLYT	MVK16VC10M D55	C221	1
TX MAIN UNIT/80	CHIP ELECTROLYT	MVK16VC10M D55	C222	1
TX MAIN UNIT/80	CHIP ELECTROLYT	MVK16VC10M D55	C223	1
TX MAIN UNIT/80	CHIP ELECTROLYT	MVK16VC10M D55	C224	1
TX MAIN UNIT/80	CHIP ELECTROLYT	MVK16VC10M D55	C225	1
TX MAIN UNIT/80	CHIP CAPACITOR	GRM40B104K25PT	C226	1
TX MAIN UNIT/80	CHIP CAPACITOR	GRM40B473K25PT	C227	1
TX MAIN UNIT/80	CHIP TANTALUM	ECST1CY105R	C228	1
TX MAIN UNIT/80	CHIP TANTALUM	ECST1VY154R	C230	1
TX MAIN UNIT/80	CHIP CAPACITOR	GRM40B102K50PT	C231	1
TX MAIN UNIT/80	CHIP CAPACITOR	GRM40B103K50PT	C232	1
TX MAIN UNIT/80	CHIP CAPACITOR	GRM40B102K50PT	C233	1
TX MAIN UNIT/80	CHIP CAPACITOR	GRM40B473K25PT	C234	1
TX MAIN UNIT/80	CHIP CAPACITOR	GRM40B103K50PT	C235	1
TX MAIN UNIT/80	CHIP CAPACITOR	GRM40B471K50PT	C236	1
TX MAIN UNIT/80	CHIP CAPACITOR	GRM40B102K50PT	C237	1
TX MAIN UNIT/80	CHIP CAPACITOR	GRM40B102K50PT	C238	1
TX MAIN UNIT/80	CHIP ELECTROLYT	MVK25VC33M F55	C239	1
TX MAIN UNIT/80	CHIP CAPACITOR	GRM40CH330J50PT	C240	1
TX MAIN UNIT/80	CHIP CAPACITOR	GRM40B102K50PT	C241	1
TX MAIN UNIT/80	CHIP CAPACITOR	GRM40B102K50PT	C243	1
TX MAIN UNIT/80	CHIP CAPACITOR	GRM40B471K50PT	C244	1
TX MAIN UNIT/80	CHIP CAPACITOR	GRM40B102K50PT	C248	1
TX MAIN UNIT/80	CHIP CAPACITOR	GRM40CH040C50PT	C249	1
TX MAIN UNIT/80	CHIP CAPACITOR	GRM40CH330J50PT	C250	1
TX MAIN UNIT/80	CHIP CAPACITOR	GRM40CH330J50PT	C252	1
TX MAIN UNIT/80	CHIP CAPACITOR	GRM40B102K50PT	C253	1
TX MAIN UNIT/80	CHIP CAPACITOR	GRM40B102K50PT	C254	1
TX MAIN UNIT/80	CHIP CAPACITOR	GRM40B103K50PT	C255	1
TX MAIN UNIT/80	CHIP CAPACITOR	GRM40B223K25PT	C256	1
TX MAIN UNIT/80	CHIP TANTALUM	ECST1CY105R	C257	1

TX MAIN UNIT/80	CORD	4A-S586	CN201	1
TX MAIN UNIT/80	CONNECTOR	52030-1610	CN202	1
TX MAIN UNIT/80	CONNECTOR	LPC-6FDS	CS201	1
TX MAIN UNIT/80	CONNECTOR	LPC-2FDS	CS202	1
TX MAIN UNIT/80	CHIP ZENNER DIODE	UDZ2.4B-TE17	D201	1
TX MAIN UNIT/80	CHIP DIODE	1SS355	D202	1
TX MAIN UNIT/80	CHIP DIODE	1SS355	D205	1
TX MAIN UNIT/80	CHIP DIODE	DA204U-T106	D206	1
TX MAIN UNIT/80	CHIP DIODE	DA204U-T106	D207	1
TX MAIN UNIT/80	CHIP DIODE	1SS355	D210	1
TX MAIN UNIT/80	CHIP DIODE	RB501V-40TE-17	D211	1
TX MAIN UNIT/80	CHIP DIODE	1SS356-TW11	D212	1
TX MAIN UNIT/80	CHIP DIODE	SML210-VT-T86	D214	1
TX MAIN UNIT/80	CHIP VR	G3AT 10K	FVR201	1
TX MAIN UNIT/80	CHIP VARICAP	EVM-7JSX30B25	FVR202	1
TX MAIN UNIT/80	CHIP VARICAP	EVM-7JSX30B15	FVR203	1
TX MAIN UNIT/80	CHIP VR	G3AT 5K	FVR204	1
TX MAIN UNIT/80	CHIP COIL	#1092(R12-H693Y)	L201	1
TX MAIN UNIT/80	CHIP INDUCTOR	LQN1A47NJ04	L203	1
TX MAIN UNIT/80	TCXO(VHF)	TCXO(VHF)	VT50P-10S201	1
TX MAIN UNIT/80	SCREW SEMS	SE-3 X 6	PCB	6
TX MAIN UNIT/80	SCREW SEMS	SE-3 X 8	COVER	6
TX MAIN UNIT/80	CHIP TRANSISTOR	2SK2731-T146	Q201	1
TX MAIN UNIT/80	CHIP TRANSISTOR	FMG9A-T148	Q202	1
TX MAIN UNIT/80	CHIP TRANSISTOR	UMC2-TR	Q203	1
TX MAIN UNIT/80	CHIP TRANSISTOR	2SK3018-T106	Q204	1
TX MAIN UNIT/80	CHIP TRANSISTOR	2SD2351-T106	Q205	1
TX MAIN UNIT/80	CHIP TRANSISTOR	2SK3018-T106	Q206	1
TX MAIN UNIT/80	CHIP TRANSISTOR	2SJ-166-T1B	Q207	1
TX MAIN UNIT/80	CHIP TRANSISTOR	2SK3018-T106	Q208	1
TX MAIN UNIT/80	CHIP TRANSISTOR	UMC2-TR	Q209	1
TX MAIN UNIT/80	CHIP TRANSISTOR	FMG2A-T148	Q210	1
TX MAIN UNIT/80	CHIP TRANSISTOR	FMG2A-T148	Q211	1
TX MAIN UNIT/80	CHIP TRANSISTOR	2SB1184TL	Q212	1
TX MAIN UNIT/80	CHIP TRANSISTOR	IMX1-T110	Q214	1
TX MAIN UNIT/80	CHIP TRANSISTOR	2SC2954-T1	Q215	1
TX MAIN UNIT/80	CHIP RESISTOR	MCR10EZHJ103	R201	1
TX MAIN UNIT/80	CHIP RESISTOR	MCR10EZHJ103	R202	1
TX MAIN UNIT/80	CHIP RESISTOR	MCR10EZHJ103	R203	1
TX MAIN UNIT/80	CHIP RESISTOR	MCR10EZHJ683	R204	1
TX MAIN UNIT/80	CHIP RESISTOR	MCR10EZHJ274	R205	1
TX MAIN UNIT/80	CHIP RESISTOR	MCR10EZHJ472	R206	1
TX MAIN UNIT/80	CHIP RESISTOR	MCR10EZHJ103	R207	1
TX MAIN UNIT/80	CHIP RESISTOR	MCR10EZHJ104	R209	1
TX MAIN UNIT/80	CHIP RESISTOR	MCR10EZHJ104	R210	1
TX MAIN UNIT/80	CHIP RESISTOR	MCR10EZHJ184	R211	1
TX MAIN UNIT/80	CHIP RESISTOR	MCR10EZHJ153	R212	1
TX MAIN UNIT/80	CHIP RESISTOR	MCR10EZHJ752	R213	1
TX MAIN UNIT/80	CHIP RESISTOR	MCR10EZHJ682	R214	1
TX MAIN UNIT/80	CHIP RESISTOR	MCR10EZHJ103	R215	1
TX MAIN UNIT/80	CHIP RESISTOR	MCR10EZHJ103	R216	1
TX MAIN UNIT/80	CHIP RESISTOR	MCR10EZHJ103	R217	1
TX MAIN UNIT/80	CHIP RESISTOR	MCR10EZHJ103	R219	1
TX MAIN UNIT/80	CHIP RESISTOR	MCR10EZHJ104	R221	1
TX MAIN UNIT/80	CHIP RESISTOR	MCR10EZHJ101	R222	1
TX MAIN UNIT/80	CHIP RESISTOR	MCR10EZHJ472	R223	1
TX MAIN UNIT/80	CHIP RESISTOR	MCR10EZHJ103	R224	1
TX MAIN UNIT/80	CHIP RESISTOR	MCR10EZHJ102	R225	1
TX MAIN UNIT/80	CHIP RESISTOR	MCR10EZHJ103	R226	1
TX MAIN UNIT/80	CHIP RESISTOR	MCR10EZHJ273	R227	1
TX MAIN UNIT/80	CHIP RESISTOR	MCR10EZHJ183	R228	1
TX MAIN UNIT/80	CHIP RESISTOR	MCR10EZHJ470	R229	1
TX MAIN UNIT/80	CHIP RESISTOR	MCR10EZHJ470	R230	1
TX MAIN UNIT/80	CHIP RESISTOR	MCR10EZHJ393	R231	1
TX MAIN UNIT/80	CHIP RESISTOR	MCR10EZHJ102	R232	1
TX MAIN UNIT/80	CHIP RESISTOR	MCR10EZHJ471	R233	1
TX MAIN UNIT/80	CHIP RESISTOR	MCR10EZHJ272	R234	1

TX MAIN UNIT/80	CHIP RESISTOR	MCR10EZHJ473	R236	1
TX MAIN UNIT/80	CHIP RESISTOR	MCR10EZHJ152	R237	1
TX MAIN UNIT/80	CHIP RESISTOR	MCR10EZHJ271	R239	1
TX MAIN UNIT/80	CHIP RESISTOR	MCR18EZHJ471	R240	1
TX MAIN UNIT/80	CHIP RESISTOR	MCR10EZHJ103	R241	1
TX MAIN UNIT/80	CHIP RESISTOR	MCR10EZHJ103	R243	1
TX MAIN UNIT/80	CHIP RESISTOR	MCR10EZHJ473	R244	1
TX MAIN UNIT/80	CHIP RESISTOR	MCR10EZHJ153	R246	1
TX MAIN UNIT/80	CHIP RESISTOR	MCR10EZHJ104	R247	1
TX MAIN UNIT/80	CHIP RESISTOR	MCR10EZHJ000	R248	1
TX MAIN UNIT/80	CHIP RESISTOR	MCR10EZHJ473	R249	1
TX MAIN UNIT/80	CHIP RESISTOR	MCR10EZHJ184	R250	1
TX MAIN UNIT/80	CHIP RESISTOR	MCR10EZHJ152	R251	1
TX MAIN UNIT/80	CHIP RESISTOR	MCR10EZHJ471	R252	1
TX MAIN UNIT/80	CHIP RESISTOR	MCR10EZHJ104	R253	1
TX MAIN UNIT/80	CHIP RESISTOR	MCR10EZHJ473	R254	1
TX MAIN UNIT/80	CHIP RESISTOR	MCR10EZHJ473	R255	1
TX MAIN UNIT/80	CHIP RESISTOR	MCR10EZHJ104	R256	1
TX MAIN UNIT/80	CHIP RESISTOR	MCR10EZHJ473	R257	1
TX MAIN UNIT/80	CHIP RESISTOR	MCR10EZHJ154	R259	1
TX MAIN UNIT/80	CHIP RESISTOR	MCR10EZHJ822	R260	1
TX MAIN UNIT/80	CHIP RESISTOR	MCR10EZHJ103	R261	1
TX MAIN UNIT/80	CHIP RESISTOR	MCR10EZHJ103	R262	1
TX MAIN UNIT/80	CHIP RESISTOR	MCR10EZHJ393	R263	1
TX MAIN UNIT/80	CHIP RESISTOR	MCR10EZHJ100	R264	1
TX MAIN UNIT/80	CHIP RESISTOR	MCR10EZHJ271	R265	1
TX MAIN UNIT/80	CHIP RESISTOR	MCR10EZHJ151	R266	1
TX MAIN UNIT/80	CHIP RESISTOR	MCR10EZHJ4R7	R267	1
TX MAIN UNIT/80	CHIP RESISTOR	MCR10EZHJ472	R268	1
TX MAIN UNIT/80	CHIP RESISTOR	MCR10EZHJ4R7	R269	1
TX MAIN UNIT/80	CHIP RESISTOR	MCR10EZHJ471	R270	1
TX MAIN UNIT/80	CHIP RESISTOR	MCR18EZHJ100	R271	1
TX MAIN UNIT/80	CHIP RESISTOR	MCR18EZHJ000	R272	1
TX MAIN UNIT/80	CHIP RESISTOR	MCR10EZHJ2R2	R274	1
TX MAIN UNIT/80	CHIP RESISTOR	MCR10EZHJ103	R277	1
TX MAIN UNIT/80	CHIP RESISTOR	MCR10EZHJ182	R278	1
TX MAIN UNIT/80	CHIP RESISTOR	MCR18EZHJ471	R279	1
TX MAIN UNIT/80	CHIP RESISTOR	MCR10EZHJ182	R280	1
TX MAIN UNIT/80	BOSS	4A10-3000		2
TX MAIN UNIT/80	P.C.B.	51TXU86-4□1/2□		1
TX MAIN UNIT/80	SPRING	4A10-2200		2
TX MAIN UNIT/80	TX COVER	4A10-3037		1
TX MAIN UNIT/80	TX SEAL	4A10-3039		1
TX MAIN UNIT/80	TX/RX FRAME	2A10-0210		1
TX VCO UNIT/80	CHIP IC	UPC1688G-T1	IC301	1
TX VCO UNIT/80	CHIP COIL	FBMH3216HM501NT	BL301	1
TX VCO UNIT/80	CHIP COIL	BLM21B421SPT	BL302	1
TX VCO UNIT/80	CHIP CAPACITOR	GRM40B823K25PT	C302	1
TX VCO UNIT/80	CHIP CAPACITOR	GRM40CH060D50PT	C303	1
TX VCO UNIT/80	CHIP CAPACITOR	GRM39CK0R5C50PT	C304	1
TX VCO UNIT/80	CHIP CAPACITOR	GRM40B471K50PT	C305	1
TX VCO UNIT/80	CHIP CAPACITOR	GRM39CK1R5C50PT	C306	1
TX VCO UNIT/80	CHIP CAPACITOR	GRM40CH200J50PT	C307	1
TX VCO UNIT/80	CHIP CAPACITOR	GRM40CH680J50PT	C308	1
TX VCO UNIT/80	CHIP CAPACITOR	GRM40CH200J50PT	C309	1
TX VCO UNIT/80	CHIP CAPACITOR	GRM40CH200J50PT	C310	1
TX VCO UNIT/80	CHIP CAPACITOR	GRM40CH050C50PT	C311	1
TX VCO UNIT/80	CHIP CAPACITOR	GRM40B102K50PT	C312	1
TX VCO UNIT/80	CHIP CAPACITOR	GRM40B102K50PT	C313	1
TX VCO UNIT/80	CHIP CAPACITOR	GRM40CH330J50PT	C314	1
TX VCO UNIT/80	CHIP CAPACITOR	GRM40CH100D50PT	C315	1

TX VCO UNIT/80	CHIP CAPACITOR	GRM40CH100D50PT	C316	1
TX VCO UNIT/80	CHIP CAPACITOR	GRM40B102K50PT	C317	1
TX VCO UNIT/80	CHIP ELECTROLYT	MVK16VC10M D55	C318	1
TX VCO UNIT/80	CHIP ELECTROLYT	MVK16VC10M D55	C319	1
TX VCO UNIT/80	CHIP CAPACITOR	GRM40B102K50PT	C320	1
TX VCO UNIT/80	CHIP CAPACITOR	GRM40CH270J50PT	C321	1
TX VCO UNIT/80	CHIP CAPACITOR	GRM40B102K50PT	C322	1
TX VCO UNIT/80	CHIP CAPACITOR	GRM40B102K50PT	C323	1
TX VCO UNIT/80	CHIP ELECTROLYT	MVK16VC10M D55	C324	1
TX VCO UNIT/80	CHIP CAPACITOR	GRM40B102K50PT	C325	1
TX VCO UNIT/80	CHIP CAPACITOR	GRM40B471K50PT	C326	1
TX VCO UNIT/80	CONNECTOR	LPC-6T7M	CP301	1
TX VCO UNIT/80	CONNECTOR	LPC-2T7M	CP302	1
TX VCO UNIT/80	CHIP DIODE	1SV230-TPH3	D301	1
TX VCO UNIT/80	CHIP DIODE	1SV229-TPH3	D302	1
TX VCO UNIT/80	CHIP DIODE	1SV231-TPH3	D303	1
TX VCO UNIT/80	CHIP DIODE	1SV231-TPH3	D304	1
TX VCO UNIT/80	CHIP DIODE	1SV231-TPH3	D305	1
TX VCO UNIT/80	CHIP DIODE	1SS355	D307	1
TX VCO UNIT/80	CHIP DIODE	1SS356-TW11	D308	1
TX VCO UNIT/80	CHIP ZENNER DIODE	UDZ2.0B-TE17	D309	1
TX VCO UNIT/80	CHIP ZENNER DIODE	UDZ2.0B-TE17	D310	1
TX VCO UNIT/80	CHIP INDUCTOR	ELJ-FC1R5MF	L301	1
TX VCO UNIT/80	CHIP COIL	KQ1008TE2R2K	L302	1
TX VCO UNIT/80	CHIP COIL	#3092	L303	1
TX VCO UNIT/80	CHIP COIL	KQ1008TE2R2K	L304	1
TX VCO UNIT/80	CHIP INDUCTOR	ELJ-FC1R0MF	L305	1
TX VCO UNIT/80	CHIP COIL	HK2125R10J	L306	1
TX VCO UNIT/80	CHIP RESISTOR	MCR10EZHJ150	L307	1
TX VCO UNIT/80	CHIP COIL	#1092(R12-H693Y)	L308	1
TX VCO UNIT/80	P.C.B.	51VC30Y-1□1/4□	PCB	1
TX VCO UNIT/80	CHIP FET	2SK508-T1B-K53	Q301	1
TX VCO UNIT/80	CHIP TRANSISTOR	2SC4250-TE85R	Q302	1
TX VCO UNIT/80	CHIP TRANSISTOR	2SC3583-T1B-R34	Q303	1
TX VCO UNIT/80	CHIP TRANSISTOR	DTA124EKA-T107	Q304	1
TX VCO UNIT/80	CHIP TRANSISTOR	2SD2351-T106	Q305	1
TX VCO UNIT/80	CHIP TRANSISTOR	DTA124EKA-T107	Q306	1
TX VCO UNIT/80	CHIP RESISTOR	MCR10EZHJ473	R301	1
TX VCO UNIT/80	CHIP RESISTOR	MCR10EZHJ473	R302	1
TX VCO UNIT/80	CHIP RESISTOR	MCR10EZHJ224	R303	1
TX VCO UNIT/80	CHIP DIODE	1SV231-TPH3	R305	1
TX VCO UNIT/80	CHIP RESISTOR	MCR10EZHJ150	R306	1
TX VCO UNIT/80	CHIP RESISTOR	MCR10EZHJ221	R307	1
TX VCO UNIT/80	CHIP RESISTOR	MCR10EZHJ472	R308	1
TX VCO UNIT/80	CHIP RESISTOR	MCR10EZHJ472	R309	1
TX VCO UNIT/80	CHIP RESISTOR	MCR10EZHJ471	R310	1
TX VCO UNIT/80	CHIP RESISTOR	MCR10EZHJ471	R311	1
TX VCO UNIT/80	CHIP RESISTOR	MCR10EZHJ101	R312	1
TX VCO UNIT/80	CHIP RESISTOR	MCR10EZHJ103	R313	1
TX VCO UNIT/80	CHIP RESISTOR	MCR10EZHJ222	R314	1
TX VCO UNIT/80	CHIP RESISTOR	MCR10EZHJ472	R315	1
TX VCO UNIT/80	CHIP RESISTOR	MCR10EZHJ332	R316	1
TX VCO UNIT/80	CHIP RESISTOR	MCR10EZHJ102	R317	1
TX VCO UNIT/80	CHIP RESISTOR	MCR10EZHJ560	R318	1
TX VCO UNIT/80	CHIP RESISTOR	MCR10EZHJ4R7	R319	1
TX VCO UNIT/80	CHIP RESISTOR	MCR10EZHJ821	R320	1
TX VCO UNIT/80	CHIP RESISTOR	MCR10EZHJ150	R321	1
TX VCO UNIT/80	CHIP CAPACITOR	GRM40B102K50PT	R322	1
TX VCO UNIT/80	CHIP RESISTOR	MCR10EZHJ101	R323	1
TX VCO UNIT/80	CHIP RESISTOR	MCR10EZHJ473	R324	1

TX VCO UNIT/80	CHIP RESISTOR	MCR10EZHJ104	R325	1
TX VCO UNIT/80	CHIP CHECKER	RCT	TP301	1
TX VCO UNIT/80	VCO COVER	4A10-2170		1
TX VCO UNIT/80	VCO SHIELD	4A10-3029		1
TX VCO UNIT/80	VCO SHIELD CASE	4A10-2169		1
BPF UNIT-1/80	CHIP CAPACITOR	GRM39CH120J50PT	C1	1
BPF UNIT-1/80	CHIP CAPACITOR	GRM39CH120J50PT	C3	1
BPF UNIT-1/80	CHIP CAPACITOR	GRM39CH120J50PT	C6	1
BPF UNIT-1/80	COIL □□	4A-S625	L1	1
BPF UNIT-1/80	COIL □□	4A-S626	L2	1
BPF UNIT-1/80	COIL □□	4A-S628	L3	1
BPF UNIT-1/80	BPF BOTTOM	3A10-0576		1
BPF UNIT-1/80	BPF CAVITY	3A10-0604		2
BPF UNIT-1/80	BPF CAVITY	3A10-0605		1
BPF UNIT-1/80	P.C.B.	51BPF30Y(1/20□		1
BPF UNIT-2/80	CHIP CAPACITOR	GRM39CH120J50PT	C1	1
BPF UNIT-2/80	CHIP CAPACITOR	GRM39CH120J50PT	C3	1
BPF UNIT-2/80	CHIP CAPACITOR	GRM39CH120J50PT	C6	1
BPF UNIT-2/80	COIL □□	4A-S628	L1	1
BPF UNIT-2/80	COIL □□	4A-S626	L2	1
BPF UNIT-2/80	COIL □□	4A-S625	L3	1
BPF UNIT-2/80	BPF BOTTOM	3A10-0576		1
BPF UNIT-2/80	BPF CAVITY	3A10-0604		2
BPF UNIT-2/80	BPF CAVITY	3A10-0605		1
BPF UNIT-2/80	P.C.B.	51BPF30Y(1/20□		1
RX MAIN UNIT/80	CHIP IC	MB1511PFV-G-BND-EF	IC101	1
RX MAIN UNIT/80	CHIP IC	NJU7662M-T1	IC102	1
RX MAIN UNIT/80	CHIP IC	BU4S66-TR	IC103	1
RX MAIN UNIT/80	CHIP IC	AN78L05M	IC104	1
RX MAIN UNIT/80	CHIP IC	TA75S01F-TE85R	IC105	1
RX MAIN UNIT/80	CHIP IC	TA75S558F-TE85R	IC107	1
RX MAIN UNIT/80	CHIP IC	TA78M05F-TE16L	IC108	1
RX MAIN UNIT/80	CHIP COIL	FBMH3216HM501NT	BL101	1
RX MAIN UNIT/80	CHIP COIL	BLM21B421SPT	BL102	1
RX MAIN UNIT/80	CHIP COIL	BLM21B421SPT	BL103	1
RX MAIN UNIT/80	CHIP COIL	FBMH3216HM501NT	BL104	1
RX MAIN UNIT/80	BPF SPRING	4A10-3041	BPF	2
RX MAIN UNIT/80	SCREW BIND	BD-2 X 6	BPF	4
RX MAIN UNIT/80	CHIP CAPACITOR	GRM40CH120J50PT	C101	1
RX MAIN UNIT/80	CHIP CAPACITOR	GRM40B471K50PT	C104	1
RX MAIN UNIT/80	CHIP CAPACITOR	GRM40B102K50PT	C106	1
RX MAIN UNIT/80	CHIP CAPACITOR	GRM40B472K50PT	C107	1
RX MAIN UNIT/80	CHIP CAPACITOR	GRM40B102K50PT	C108	1
RX MAIN UNIT/80	CHIP CAPACITOR	GRM40B102K50PT	C109	1
RX MAIN UNIT/80	CHIP CAPACITOR	GRM40CH101J50PT	C110	1
RX MAIN UNIT/80	CHIP CAPACITOR	GRM40B471K50PT	C111	1
RX MAIN UNIT/80	CHIP CAPACITOR	GRM40B102K50PT	C112	1
RX MAIN UNIT/80	CHIP CAPACITOR	GRM40B102K50PT	C115	1
RX MAIN UNIT/80	CHIP CAPACITOR	GRM40B472K50PT	C116	1
RX MAIN UNIT/80	CHIP CAPACITOR	GRM40B102K50PT	C117	1
RX MAIN UNIT/80	CHIP CAPACITOR	GRM40B102K50PT	C118	1
RX MAIN UNIT/80	CHIP CAPACITOR	GRM40CH101J50PT	C119	1
RX MAIN UNIT/80	CHIP CAPACITOR	GRM40B471K50PT	C120	1
RX MAIN UNIT/80	CHIP CAPACITOR	GRM40B102K50PT	C121	1
RX MAIN UNIT/80	CHIP CAPACITOR	GRM40CH150J50PT	C122	1
RX MAIN UNIT/80	CHIP CAPACITOR	GRM40CK1R5C50PT	C124	1
RX MAIN UNIT/80	CHIP CAPACITOR	GRM40CH101J50PT	C125	1
RX MAIN UNIT/80	CHIP CAPACITOR	GRM40CH220J50PT	C126	1
RX MAIN UNIT/80	CHIP CAPACITOR	GRM40CH200J50PT	C127	1
RX MAIN UNIT/80	CHIP CAPACITOR	GRM40B102K50PT	C128	1

RX MAIN UNIT/80	CHIP CAPACITOR	GRM40B102K50PT	C129	1
RX MAIN UNIT/80	CHIP CAPACITOR	GRM40CH330J50PT	C130	1
RX MAIN UNIT/80	CHIP TANTALUM	ECST1CY105R	C131	1
RX MAIN UNIT/80	CHIP CAPACITOR	GRM40CH050C50PT	C132	1
RX MAIN UNIT/80	CHIP CAPACITOR	GRM40B102K50PT	C133	1
RX MAIN UNIT/80	CHIP CAPACITOR	GRM40B473K25PT	C134	1
RX MAIN UNIT/80	CHIP CAPACITOR	GRM40CH040C50PT	C135	1
RX MAIN UNIT/80	CHIP CAPACITOR	GRM40B473K25PT	C137	1
RX MAIN UNIT/80	CHIP TANTALUM	ECST1AY475R	C138	1
RX MAIN UNIT/80	CHIP ELECTROLYT	MVK16VC10M D55	C139	1
RX MAIN UNIT/80	CHIP CAPACITOR	GRM40B473K25PT	C140	1
RX MAIN UNIT/80	CHIP TANTALUM	ECST1VY224R	C141	1
RX MAIN UNIT/80	CHIP CAPACITOR	GRM40CH151J50PT	C142	1
RX MAIN UNIT/80	CHIP CAPACITOR	GRM40CH070D50PT	C143	1
RX MAIN UNIT/80	CHIP ELECTROLYT	MVK16VC10M D55	C145	1
RX MAIN UNIT/80	CHIP ELECTROLYT	MVK16VC10M D55	C146	1
RX MAIN UNIT/80	CHIP ELECTROLYT	MVK16VC10M D55	C147	1
RX MAIN UNIT/80	CHIP ELECTROLYT	MVK16VC10M D55	C148	1
RX MAIN UNIT/80	CHIP ELECTROLYT	MVK16VC10M D55	C149	1
RX MAIN UNIT/80	CHIP CAPACITOR	GRM40B153K50PT	C150	1
RX MAIN UNIT/80	CHIP TANTALUM	ECST1CY105R	C151	1
RX MAIN UNIT/80	CHIP CAPACITOR	GRM40B473K25PT	C152	1
RX MAIN UNIT/80	CHIP CAPACITOR	GRM40B104K25PT	C153	1
RX MAIN UNIT/80	CHIP TANTALUM	ECST1CY105R	C155	1
RX MAIN UNIT/80	CHIP ELECTROLYT	MVK16VC10M D55	C156	1
RX MAIN UNIT/80	CHIP TANTALUM	ECST1CY225R	C157	1
RX MAIN UNIT/80	CHIP CAPACITOR	GRM40B153K50PT	C166	1
RX MAIN UNIT/80	CHIP CAPACITOR	GRM40B153K50PT	C187	1
RX MAIN UNIT/80	CHIP CAPACITOR	GRM40B103K50PT	C188	1
RX MAIN UNIT/80	CHIP CAPACITOR	GRM40B222K50PT	C189	1
RX MAIN UNIT/80	CORD	4A-S587	CN101	1
RX MAIN UNIT/80	CONNECTOR	52030-1610	CN202	1
RX MAIN UNIT/80	CONNECTOR	LPC-6FDS	CS101	1
RX MAIN UNIT/80	CONNECTOR	LPC-2FDS	CS102	1
RX MAIN UNIT/80	CONNECTOR	CONNECTOR	CS103	1
RX MAIN UNIT/80	CONNECTOR	LPC-6FDS	CS104	1
RX MAIN UNIT/80	CHIP DIODE	HVU131TRF	D101	1
RX MAIN UNIT/80	CHIP DIODE	HVU131TRF	D102	1
RX MAIN UNIT/80	CHIP DIODE	1SS271-TE85R	D107	1
RX MAIN UNIT/80	CHIP DIODE	1SS271-TE85R	D108	1
RX MAIN UNIT/80	CHIP DIODE	RB501V-40TE-17	D109	1
RX MAIN UNIT/80	CHIP DIODE	1SS355	D110	1
RX MAIN UNIT/80	CHIP DIODE	1SS355	D111	1
RX MAIN UNIT/80	CHIP DIODE	DA204U-T106	D112	1
RX MAIN UNIT/80	CHIP DIODE	DA204U-T106	D113	1
RX MAIN UNIT/80	CHIP DIODE	1SS355	D114	1
RX MAIN UNIT/80	CHIP ZENNER DIODE	UDZ2.4B-TE17	D118	1
RX MAIN UNIT/80	CHIP DIODE	SML210-VT-T86	D119	1
RX MAIN UNIT/80	SPRING-108	4A10-2200	GNB	3
RX MAIN UNIT/80	JUMPER PLUG	DIC-149-3P	J101	1
RX MAIN UNIT/80	JUMPER SOCKET	DIC-128	JS	1
RX MAIN UNIT/80	CHIP INDUCTOR	LQN1AR10J04	L101	1
RX MAIN UNIT/80	CHIP RESISTOR	MCR10EZHJ000	L102	1
RX MAIN UNIT/80	CHIP COIL	KQ1008TE2R2K	L103	1
RX MAIN UNIT/80	CHIP RESISTOR	MCR10EZHJ000	L104	1
RX MAIN UNIT/80	CHIP RESISTOR	MCR10EZHJ000	L105	1
RX MAIN UNIT/80	CHIP COIL	KQ1008TE2R2K	L106	1
RX MAIN UNIT/80	CHIP RESISTOR	MCR10EZHJ000	L107	1
RX MAIN UNIT/80	CHIP INDUCTOR	LQN1AR10J04	L109	1
RX MAIN UNIT/80	CHIP INDUCTOR	NL322522TR56J	L110	1

RX MAIN UNIT/80	CHIP INDUCTOR	ELJ-FC4R7KF	L111	1
RX MAIN UNIT/80	CHIP INDUCTOR	NL322522TR68J	L112	1
RX MAIN UNIT/80	CHIP RESISTOR	MCR10EZHJ000	L113	1
RX MAIN UNIT/80	CHIP INDUCTOR	ELJ-FC1R0MF	L114	1
RX MAIN UNIT/80	TCXO(VHF)	VT50P-14	OS101	1
RX MAIN UNIT/80	SCREW SEMS	SE-3 X 6	PCB	6
RX MAIN UNIT/80	SCREW SEMS	SE-3 X 8	COVER	6
RX MAIN UNIT/80	CHIP TRANSISTOR	3SK177-T1-U72	Q101	1
RX MAIN UNIT/80	CHIP FET	2SK508-T1B-K53	Q103	1
RX MAIN UNIT/80	CHIP TRANSISTOR	DTB143EK-T146	Q104	1
RX MAIN UNIT/80	CHIP TRANSISTOR	2SD2351-T106	Q107	1
RX MAIN UNIT/80	CHIP TRANSISTOR	2SJ-166-T1B	Q108	1
RX MAIN UNIT/80	CHIP TRANSISTOR	2SK3018-T106	Q109	1
RX MAIN UNIT/80	CHIP TRANSISTOR	2SK3018-T106	Q110	1
RX MAIN UNIT/80	CHIP TRANSISTOR	UMC2-TR	Q111	1
RX MAIN UNIT/80	CHIP TRANSISTOR	UMC2-TR	Q112	1
RX MAIN UNIT/80	CHIP TRANSISTOR	DTA144EUA-T106	Q117	1
RX MAIN UNIT/80	CHIP TRANSISTOR	DTB143EK-T146	Q118	1
RX MAIN UNIT/80	CHIP TRANSISTOR	DTC114EKA-T146	Q119	1
RX MAIN UNIT/80	CHIP TRANSISTOR	2SK3018-T106	Q120	1
RX MAIN UNIT/80	CHIP RESISTOR	MCR10EZHJ103	R101	1
RX MAIN UNIT/80	CHIP RESISTOR	MCR10EZHJ821	R102	1
RX MAIN UNIT/80	CHIP RESISTOR	MCR10EZHJ272	R103	1
RX MAIN UNIT/80	CHIP RESISTOR	MCR10EZHJ103	R104	1
RX MAIN UNIT/80	CHIP RESISTOR	MCR10EZHJ223	R105	1
RX MAIN UNIT/80	CHIP RESISTOR	MCR10EZHJ750	R106	1
RX MAIN UNIT/80	CHIP RESISTOR	MCR10EZHJ152	R107	1
RX MAIN UNIT/80	CHIP RESISTOR	MCR10EZHJ470	R108	1
RX MAIN UNIT/80	CHIP RESISTOR	MCR10EZHJ000	R110	1
RX MAIN UNIT/80	CHIP RESISTOR	MCR10EZHJ821	R111	1
RX MAIN UNIT/80	CHIP RESISTOR	MCR10EZHJ272	R112	1
RX MAIN UNIT/80	CHIP RESISTOR	MCR10EZHJ103	R113	1
RX MAIN UNIT/80	CHIP RESISTOR	MCR10EZHJ223	R114	1
RX MAIN UNIT/80	CHIP RESISTOR	MCR10EZHJ750	R115	1
RX MAIN UNIT/80	CHIP RESISTOR	MCR10EZHJ152	R116	1
RX MAIN UNIT/80	CHIP RESISTOR	MCR10EZHJ470	R117	1
RX MAIN UNIT/80	CHIP RESISTOR	MCR10EZHJ821	R118	1
RX MAIN UNIT/80	CHIP RESISTOR	MCR10EZHJ151	R119	1
RX MAIN UNIT/80	CHIP RESISTOR	MCR10EZHJ560	R121	1
RX MAIN UNIT/80	CHIP RESISTOR	MCR10EZHJ103	R122	1
RX MAIN UNIT/80	CHIP RESISTOR	MCR10EZHJ101	R123	1
RX MAIN UNIT/80	CHIP RESISTOR	MCR10EZHJ822	R124	1
RX MAIN UNIT/80	CHIP RESISTOR	MCR10EZHJ104	R125	1
RX MAIN UNIT/80	CHIP RESISTOR	MCR10EZHJ393	R126	1
RX MAIN UNIT/80	CHIP RESISTOR	MCR10EZHJ104	R127	1
RX MAIN UNIT/80	CHIP RESISTOR	MCR10EZHJ682	R128	1
RX MAIN UNIT/80	CHIP RESISTOR	MCR10EZHJ473	R129	1
RX MAIN UNIT/80	CHIP RESISTOR	MCR10EZHJ104	R130	1
RX MAIN UNIT/80	CHIP RESISTOR	MCR10EZHJ470	R131	1
RX MAIN UNIT/80	CHIP RESISTOR	MCR10EZHJ103	R132	1
RX MAIN UNIT/80	CHIP RESISTOR	MCR10EZHJ103	R133	1
RX MAIN UNIT/80	CHIP RESISTOR	MCR10EZHJ103	R134	1
RX MAIN UNIT/80	CHIP RESISTOR	MCR10EZHJ470	R135	1
RX MAIN UNIT/80	CHIP RESISTOR	MCR10EZHJ682	R136	1
RX MAIN UNIT/80	CHIP RESISTOR	MCR10EZHJ103	R137	1
RX MAIN UNIT/80	CHIP RESISTOR	MCR10EZHJ103	R138	1
RX MAIN UNIT/80	CHIP RESISTOR	MCR10EZHJ103	R139	1
RX MAIN UNIT/80	CHIP RESISTOR	MCR10EZHJ752	R140	1
RX MAIN UNIT/80	CHIP RESISTOR	MCR10EZHJ472	R141	1
RX MAIN UNIT/80	CHIP RESISTOR	MCR10EZHJ273	R144	1

RX MAIN UNIT/80	CHIP RESISTOR	MCR10EZHJ183	R145	1
RX MAIN UNIT/80	CHIP RESISTOR	MCR10EZHJ472	R146	1
RX MAIN UNIT/80	CHIP RESISTOR	MCR10EZHJ101	R148	1
RX MAIN UNIT/80	CHIP RESISTOR	MCR10EZHJ104	R149	1
RX MAIN UNIT/80	CHIP RESISTOR	MCR10EZHJ470	R150	1
RX MAIN UNIT/80	CHIP RESISTOR	MCR10EZHJ470	R151	1
RX MAIN UNIT/80	CHIP RESISTOR	MCR10EZHJ393	R152	1
RX MAIN UNIT/80	CHIP RESISTOR	MCR10EZHJ102	R153	1
RX MAIN UNIT/80	CHIP RESISTOR	MCR10EZHJ681	R154	1
RX MAIN UNIT/80	CHIP RESISTOR	MCR10EZHJ272	R155	1
RX MAIN UNIT/80	CHIP RESISTOR	MCR10EZHJ473	R157	1
RX MAIN UNIT/80	CHIP RESISTOR	MCR10EZHJ471	R158	1
RX MAIN UNIT/80	CHIP RESISTOR	MCR10EZHJ104	R183	1
RX MAIN UNIT/80	CHIP RESISTOR	MCR10EZHJ103	R184	1
RX MAIN UNIT/80	CHIP RESISTOR	MCR10EZHJ473	R185	1
RX MAIN UNIT/80	CHIP RESISTOR	MCR10EZHJ472	R186	1
RX MAIN UNIT/80	CHIP RESISTOR	MCR10EZHJ103	R187	1
RX MAIN UNIT/80	CHIP RESISTOR	MCR10EZHJ104	R188	1
RX MAIN UNIT/80	CHIP RESISTOR	MCR10EZHJ332	R189	1
RX MAIN UNIT/80	CHIP COIL	#3060	T101	1
RX MAIN UNIT/80	CHIP COIL	#3060	T102	1
RX MAIN UNIT/80	COIL	M7-T1(31302)	T103	1
RX MAIN UNIT/80	CRYSTAL FILTER	48S15A	XF101	1
RX MAIN UNIT/80	BOSS	4A10-3000		2
RX MAIN UNIT/80	MIX SHIELD CASE-108	4A10-2171		1
RX MAIN UNIT/80	P.C.B.	51RX80Y-1□1/2□		1
RX MAIN UNIT/80	RX COVER	4A10-2994		1
RX MAIN UNIT/80	RX SEAL	4A10-3040		1
RX MAIN UNIT/80	TX/RX FRAME	2A10-0210		1
RX VCO UNIT/80	CHIP IC	UPC1688G-T1	IC301	1
RX VCO UNIT/80	CHIP COIL	FBMH3216HM501NT	BL301	1
RX VCO UNIT/80	CHIP COIL	BLM21B421SPT	BL302	1
RX VCO UNIT/80	CHIP CAPACITOR	GRM40B823K25PT	C302	1
RX VCO UNIT/80	CHIP CAPACITOR	GRM40CH120J50PT	C303	1
RX VCO UNIT/80	CHIP CAPACITOR	GRM40CH181J50PT	C305	1
RX VCO UNIT/80	CHIP CAPACITOR	GRM40CH150J50PT	C307	1
RX VCO UNIT/80	CHIP CAPACITOR	GRM40CH270J50PT	C308	1
RX VCO UNIT/80	CHIP CAPACITOR	GRM40CH220J50PT	C309	1
RX VCO UNIT/80	CHIP CAPACITOR	GRM40CH240J50PT	C310	1
RX VCO UNIT/80	CHIP CAPACITOR	GRM40CK020C50PT	C311	1
RX VCO UNIT/80	CHIP CAPACITOR	GRM40B102K50PT	C312	1
RX VCO UNIT/80	CHIP CAPACITOR	GRM40B102K50PT	C313	1
RX VCO UNIT/80	CHIP CAPACITOR	GRM40CH220J50PT	C314	1
RX VCO UNIT/80	CHIP CAPACITOR	GRM40CH040C50PT	C315	1
RX VCO UNIT/80	CHIP CAPACITOR	GRM40CH100D50PT	C316	1
RX VCO UNIT/80	CHIP CAPACITOR	GRM40B102K50PT	C317	1
RX VCO UNIT/80	CHIP ELECTROLYT	MVK16VC10M D55	C318	1
RX VCO UNIT/80	CHIP ELECTROLYT	MVK16VC10M D55	C319	1
RX VCO UNIT/80	CHIP CAPACITOR	GRM40B102K50PT	C320	1
RX VCO UNIT/80	CHIP CAPACITOR	GRM40CH220J50PT	C321	1
RX VCO UNIT/80	CHIP CAPACITOR	GRM40B102K50PT	C322	1
RX VCO UNIT/80	CHIP CAPACITOR	GRM40B102K50PT	C323	1
RX VCO UNIT/80	CHIP ELECTROLYT	MVK16VC10M D55	C324	1
RX VCO UNIT/80	CHIP CAPACITOR	GRM40B102K50PT	C325	1
RX VCO UNIT/80	CHIP CAPACITOR	GRM40B471K50PT	C326	1
RX VCO UNIT/80	CONNECTOR	LPC-6T7M	CP301	1
RX VCO UNIT/80	CONNECTOR	LPC-2T7M	CP302	1
RX VCO UNIT/80	CHIP DIODE	1SV231-TPH3	D303	1
RX VCO UNIT/80	CHIP DIODE	1SV231-TPH3	D304	1
RX VCO UNIT/80	CHIP DIODE	1SS355	D307	1

RX VCO UNIT/80	CHIP DIODE	1SS356-TW11	D308	1
RX VCO UNIT/80	CHIP ZENNER DIODE	UDZ2.0B-TE17	D309	1
RX VCO UNIT/80	CHIP ZENNER DIODE	UDZ2.0B-TE17	D310	1
RX VCO UNIT/80	CHIP INDUCTOR	ELJ-FC1R5MF	L301	1
RX VCO UNIT/80	CHIP COIL	KQ1008TE2R2K	L302	1
RX VCO UNIT/80	CHIP COIL	#3091	L303	1
RX VCO UNIT/80	CHIP COIL	KQ1008TE2R2K	L304	1
RX VCO UNIT/80	CHIP INDUCTOR	ELJ-FC1R0MF	L305	1
RX VCO UNIT/80	CHIP COIL	LL2012-F68NK	L306	1
RX VCO UNIT/80	CHIP RESISTOR	MCR10EZHJ100	L307	1
RX VCO UNIT/80	CHIP COIL	#1092(R12-H693Y)	L308	1
RX VCO UNIT/80	P.C.B.	51VC30Y-1□1/4□	PCB	1
RX VCO UNIT/80	CHIP FET	2SK508-T1B-K53	Q301	1
RX VCO UNIT/80	CHIP TRANSISTOR	2SC4250-TE85R	Q302	1
RX VCO UNIT/80	CHIP TRANSISTOR	2SC3583-T1B-R34	Q303	1
RX VCO UNIT/80	CHIP TRANSISTOR	DTA124EKA-T107	Q304	1
RX VCO UNIT/80	CHIP TRANSISTOR	2SD2351-T106	Q305	1
RX VCO UNIT/80	CHIP TRANSISTOR	DTA124EKA-T107	Q306	1
RX VCO UNIT/80	CHIP RESISTOR	MCR10EZHJ150	R306	1
RX VCO UNIT/80	CHIP RESISTOR	MCR10EZHJ221	R307	1
RX VCO UNIT/80	CHIP RESISTOR	MCR10EZHJ472	R308	1
RX VCO UNIT/80	CHIP RESISTOR	MCR10EZHJ472	R309	1
RX VCO UNIT/80	CHIP RESISTOR	MCR10EZHJ471	R310	1
RX VCO UNIT/80	CHIP RESISTOR	MCR10EZHJ471	R311	1
RX VCO UNIT/80	CHIP RESISTOR	MCR10EZHJ101	R312	1
RX VCO UNIT/80	CHIP RESISTOR	MCR10EZHJ222	R314	1
RX VCO UNIT/80	CHIP RESISTOR	MCR10EZHJ472	R315	1
RX VCO UNIT/80	CHIP RESISTOR	MCR10EZHJ332	R316	1
RX VCO UNIT/80	CHIP RESISTOR	MCR10EZHJ102	R317	1
RX VCO UNIT/80	CHIP RESISTOR	MCR10EZHJ470	R318	1
RX VCO UNIT/80	CHIP RESISTOR	MCR10EZHJ4R7	R319	1
RX VCO UNIT/80	CHIP RESISTOR	MCR10EZHJ331	R320	1
RX VCO UNIT/80	CHIP RESISTOR	MCR10EZHJ150	R321	1
RX VCO UNIT/80	CHIP RESISTOR	MCR10EZHJ103	R322	1
RX VCO UNIT/80	CHIP RESISTOR	MCR10EZHJ101	R323	1
RX VCO UNIT/80	CHIP CHECKER	RCT	TP301	1
RX VCO UNIT/80	VCO COVER	4A10-2170		1
RX VCO UNIT/80	VCO SHIELD	4A10-3029		1
RX VCO UNIT/80	VCO SHIELD CASE	4A10-2169		1
PA UNIT/80	CHIP IC	BAM4558F	IC501	1
PA UNIT/80	CHIP IC	TA75S01F-TE85R	IC502	1
PA UNIT/80	CHIP IC	M5237ML-600C	IC503	1
PA UNIT/80	CHIP IC	AN78L05M	IC504	1
PA UNIT/80	CHIP COIL	FBMH3216HM501NT	BL501	1
PA UNIT/80	COIL LEAD CHOKE	FBA04VA900KF	BL505	1
PA UNIT/80	COIL LEAD CHOKE	FBA04VA900KF	BL506	1
PA UNIT/80	CHIP COIL	FBMH3216HM501NT	BL507	1
PA UNIT/80	CHIP COIL	FBMH3216HM501NT	BL508	1
PA UNIT/80	COIL LEAD CHOKE	FBA04VA900KF	BL509	1
PA UNIT/80	CHIP COIL	FBMH3216HM501NT	BL510	1
PA UNIT/80	COIL LEAD CHOKE	FBA04VA900KF	BL512	1
PA UNIT/80	COIL LEAD CHOKE	FBA04VA900KF	BL514	1
PA UNIT/80	CHIP CAPACITOR	GRM40B102K50PT	C501	1
PA UNIT/80	CHIP CAPACITOR	GRM40B222K50PT	C502	1
PA UNIT/80	CHIP CAPACITOR	GRM40B471K50PT	C503	1
PA UNIT/80	CHIP CAPACITOR	GRM40CH560J50PT	C504	1
PA UNIT/80	CHIP CAPACITOR	GRM40B222K50PT	C505	1
PA UNIT/80	CHIP CAPACITOR	GRM40B222K50PT	C506	1
PA UNIT/80	CHIP CAPACITOR	GRM40CH151J50PT	C507	1
PA UNIT/80	CHIP CAPACITOR	GRM40CH560J50PT	C508	1

PA UNIT/80	CHIP MICA	UC342H330OJ	C509	1
PA UNIT/80	CHIP MICA	UC342H390OJ	C510	1
PA UNIT/80	CHIP MICA	UC342H470OJ	C511	1
PA UNIT/80	CHIP MICA	UC342H360OJ	C512	1
PA UNIT/80	CHIP MICA	UC342H120OJ	C513	1
PA UNIT/80	MICA C.	RM20A2H331J	C514	1
PA UNIT/80	CHIP MICA	UC342H120OJ	C515	1
PA UNIT/80	CHIP MICA	UC342H150OJ	C516	1
PA UNIT/80	CHIP MICA	UC342H100OJ	C517	1
PA UNIT/80	CHIP MICA	UC232H0100D	C518	1
PA UNIT/80	CHIP MICA	UC232H0270J	C519	1
PA UNIT/80	CHIP MICA	UC552A2001J	C520	1
PA UNIT/80	CHIP MICA	UC232H0330J	C521	1
PA UNIT/80	CHIP MICA	UC232H0330J	C522	1
PA UNIT/80	CHIP CAPACITOR	GRM40CJ030C50PT	C524	1
PA UNIT/80	CHIP CAPACITOR	GRM40B222K50PT	C525	1
PA UNIT/80	CHIP CAPACITOR	GRM40B222K50PT	C526	1
PA UNIT/80	CHIP CAPACITOR	GRM40B222K50PT	C527	1
PA UNIT/80	CHIP CAPACITOR	GRM40B222K50PT	C528	1
PA UNIT/80	CHIP CAPACITOR	GRM40B222K50PT	C529	1
PA UNIT/80	CHIP CAPACITOR	GRM40B222K50PT	C530	1
PA UNIT/80	CHIP MICA	UC552A2001J	C531	1
PA UNIT/80	CHIP MICA	UC232H0330J	C532	1
PA UNIT/80	CHIP MICA	UC232H0330J	C533	1
PA UNIT/80	CHIP MICA	UC232H0330J	C534	1
PA UNIT/80	CHIP MICA	UC232H0330J	C535	1
PA UNIT/80	CHIP CAPACITOR	GRM40B222K50PT	C540	1
PA UNIT/80	CHIP ELECTROLYT	MVK35VC4R7M D55	C541	1
PA UNIT/80	CHIP CAPACITOR	GRM40B103K50PT	C542	1
PA UNIT/80	CHIP CAPACITOR	GRM40B471K50PT	C543	1
PA UNIT/80	CHIP MICA	UC552A2001J	C544	1
PA UNIT/80	CHIP CAPACITOR	GRM40B222K50PT	C545	1
PA UNIT/80	CHIP TANTALUM	ECST1VY224R	C546	1
PA UNIT/80	CHIP CAPACITOR	GRM40B222K50PT	C547	1
PA UNIT/80	CHIP CAPACITOR	GRM40B222K50PT	C548	1
PA UNIT/80	CHIP CAPACITOR	GRM40B472K50PT	C549	1
PA UNIT/80	CHIP CAPACITOR	GRM40B104K25PT	C550	1
PA UNIT/80	CHIP ELECTROLYT	MVK25VC33M F55	C552	1
PA UNIT/80	CHIP CAPACITOR	GRM40B104K25PT	C553	1
PA UNIT/80	CHIP ELECTROLYT	MVK25VC33M F55	C554	1
PA UNIT/80	CHIP TANTALUM	ECST1CY225R	C555	1
PA UNIT/80	CHIP CAPACITOR	GRM40B104K25PT	C556	1
PA UNIT/80	CHIP MICA	UC232H0390J	C559	1
PA UNIT/80	CHIP MICA	UC232H0390J	C560	1
PA UNIT/80	CHIP CAPACITOR	GRM40B222K50PT	C561	1
PA UNIT/80	CHIP CAPACITOR	GRM40B104K25PT	C562	1
PA UNIT/80	CONNECTOR	SM551	CN501	1
PA UNIT/80	CONNECTOR	4A-S588	CN502	1
PA UNIT/80	CHIP DIODE	1SS355	D501	1
PA UNIT/80	CHIP DIODE	1SS355	D502	1
PA UNIT/80	CHIP DIODE	RB501V-40TE17	D503	1
PA UNIT/80	CHIP DIODE	RB501V-40TE17	D504	1
PA UNIT/80	CHIP DIODE	RB501V-40TE17	D505	1
PA UNIT/80	CHIP ZENNER DIODE	UDZ2.4B-TE17	D506	1
PA UNIT/80	CHIP DIODE	1SS355	D507	1
PA UNIT/80	CHIP DIODE	1SS355	D508	1
PA UNIT/80	CHIP DIODE	1SS355	D509	1
PA UNIT/80	CHIP DIODE	SML-210VT-T86	D510	1
PA UNIT/80	THROUCH C.	1HB340YE102PDA05	FC501	1
PA UNIT/80	THROUCH C.	1HB340YE102PDA05	FC503	1

PA UNIT/80	CAPASITOR TRIMMER	CV03C-500-2	FVC505	1
PA UNIT/80	CHIP VARICAP	EVM-7JSX30B22	FVR501	1
PA UNIT/80	CHIP VR	G3AT 2K	FVR502	1
PA UNIT/80	CHIP VR	G3AT 2K	FVR503	1
PA UNIT/80	CHIP VARICAP	EVM-7JSX30B15	FVR504	1
PA UNIT/80	CHIP COIL	LL2012-F47NK	L501	1
PA UNIT/80	CHIP COIL	KQ1008TE2R2K	L502	1
PA UNIT/80	CHIP COIL	FBMH3216HM501NT	L503	1
PA UNIT/80	COIL □□	4A-S629	L504	1
PA UNIT/80	COIL □□□□□□□	FLB06BT04	L505	1
PA UNIT/80	COIL □□	4A-S630	L506	1
PA UNIT/80	COIL □□	4A-S631	L507	1
PA UNIT/80	COIL □□	4A-S632	L508	1
PA UNIT/80	COIL □□	4A-S633	L509	1
PA UNIT/80	COIL □□	4A-S634	L510	1
PA UNIT/80	COIL □□	4A-S633	L511	1
PA UNIT/80	P.C.B.	51PA80Z	PCB	1
PA UNIT/80	TRANSISTOR	2SC1947-01	Q501	1
PA UNIT/80	CHIP TRANSISTOR	DTC124EKA-T146	Q502	1
PA UNIT/80	CHIP TRANSISTOR	DTB143EK-T146	Q503	1
PA UNIT/80	CHIP TRANSISTOR	2SC2412K	Q504	1
PA UNIT/80	TRANSISTOR	2SB1018A	Q505	1
PA UNIT/80	TRANSISTOR	2SC1729	Q506	1
PA UNIT/80	CHIP TRANSISTOR	2SK2731-T146	Q507	1
PA UNIT/80	TRANSISTOR	2SC2694	Q508	1
PA UNIT/80	CHIP RESISTOR	MCR10EZHJ182	R501	1
PA UNIT/80	CHIP RESISTOR	MCR10EZHJ331	R502	1
PA UNIT/80	CHIP RESISTOR	MCR10EZHJ2R2	R503	1
PA UNIT/80	CHIP RESISTOR	MCR10EZHJ331	R504	1
PA UNIT/80	CHIP RESISTOR	MCR10EZHJ4R7	R505	1
PA UNIT/80	CHIP RESISTOR	MCR10EZHJ101	R506	1
PA UNIT/80	CHIP RESISTOR	MCR18EZHJ471	R507	1
PA UNIT/80	CHIP RESISTOR	MCR10EZHJ222	R508	1
PA UNIT/80	CHIP RESISTOR	MCR50EZHJ100	R509	1
PA UNIT/80	CHIP RESISTOR	MCR10EZHJ103	R510	1
PA UNIT/80	CHIP RESISTOR	MCR10EZHJ103	R511	1
PA UNIT/80	CHIP RESISTOR	MCR10EZHJ103	R512	1
PA UNIT/80	CHIP RESISTOR	MCR10EZHJ471	R513	1
PA UNIT/80	CHIP RESISTOR	MCR10EZHJ562	R514	1
PA UNIT/80	CHIP RESISTOR	MCR10EZHJ473	R515	1
PA UNIT/80	CHIP RESISTOR	MCR10EZHJ474	R516	1
PA UNIT/80	CHIP RESISTOR	MCR10EZHJ104	R517	1
PA UNIT/80	CHIP RESISTOR	MCR10EZHJ682	R518	1
PA UNIT/80	CHIP RESISTOR	MCR10EZHJ103	R519	1
PA UNIT/80	CHIP RESISTOR	MCR10EZHJ102	R520	1
PA UNIT/80	CHIP RESISTOR	MCR10EZHJ102	R521	1
PA UNIT/80	CHIP RESISTOR	MCR10EZHJ562	R522	1
PA UNIT/80	CHIP RESISTOR	MCR10EZHJ392	R523	1
PA UNIT/80	CHIP RESISTOR	MCR10EZHJ562	R524	1
PA UNIT/80	CHIP RESISTOR	MCR10EZHJ104	R525	1
PA UNIT/80	CHIP RESISTOR	MCR10EZHJ104	R526	1
PA UNIT/80	CHIP RESISTOR	MCR10EZHJ102	R528	1
PA UNIT/80	CHIP RESISTOR	MCR10EZHJ473	R529	1
PA UNIT/80	CHIP RESISTOR	MCR10EZHJ104	R530	1
PA UNIT/80	CHIP RESISTOR	MCR10EZHJ271	R531	1
PA UNIT/80	CHIP RESISTOR	MCR100EZHJ271	R532	1
PA UNIT/80	CHIP RESISTOR	MCR10EZHJ104	R533	1
PA UNIT/80	CHIP RESISTOR	MCR10EZHJ123	R534	1
PA UNIT/80	CHIP RESISTOR	MCR10EZHJ472	R535	1
PA UNIT/80	CHIP RESISTOR	MCR10EZHJ184	R536	1

PA UNIT/80	CHIP RESISTOR	MCR10EZHJ102	R537	1
PA UNIT/80	CHIP RESISTOR	MCR10EZHJ222	R538	1
PA UNIT/80	CHIP RESISTOR	MCR10EZHJ271	R539	1
PA UNIT/80	CHIP RESISTOR	MCR10EZHJ272	R540	1
PA UNIT/80	CHIP RESISTOR	MCR10EZHJ472	R541	1
PA UNIT/80	CHIP RESISTOR	MCR10EZHJ472	R542	1
PA UNIT/80	CHIP RESISTOR	MCR10EZHJ272	R543	1
PA UNIT/80	CHIP RESISTOR	MCR18EZHJ100	R544	1
PA UNIT/80	CHIP RESISTOR	MCR10EZHJ271	R545	1
PA UNIT/80	CHIP RESISTOR	MCR10EZHJ822	R546	1
PA UNIT/80	CHIP RESISTOR	MCR10EZHJ101	R547	1
PA UNIT/80	CHIP RESISTOR	MCR10EZHJ272	R548	1
PA UNIT/80	CHIP RESISTOR	MCR50EZHJ1R0	R549	1
PA UNIT/80	CHIP RESISTOR	MCR18EZHJ4R7	R550	1
PA UNIT/80	CHIP RESISTOR	MCR18EZHJ470	R551	1
PA UNIT/80	RESISTOR	RSMF2B 47	R552	1
PA UNIT/80	RESISTOR	RSMF2B 10	R553	1
PA UNIT/80	RESISTOR	RSMF2B 100	R554	1
PA UNIT/80	CHIP RESISTOR	MCR10EZHJ330	R555	1
PA UNIT/80	CHIP CHECKER	RCT	TP501	1
PA UNIT/80	CHIP CHECKER	RCT	TP502	1
PA UNIT/80	SHIELD PLATE	4A10-3111		1
PA UNIT/80	PLATE	4A10-3080		1
PAP UNIT	COIL LEAD CHOKE	FBA04VA900KF	BL516	1
PAP UNIT	COIL LEAD CHOKE	FBA04VA900KF	BL517	1
PAP UNIT	MYCROHEDA	JM16LH-03CBT	CN503	1
PAP UNIT	CONNECTOR	4A-S600	CP501	1
PAP UNIT	CONNECTOR	4A-S601	DC510 -	1
PAP UNIT	CONNECTOR	4A-S602	DC510 +	1
PAP UNIT	THROUCH C.	1HB340YE102PDA05	FC502	1
PAP UNIT	P.C.B.	51PAP8X□1/4□		1
PA CH UNIT	BOSS	4A10-2999		8
PA CH UNIT	PA COVER	3A10-0574		1
PA CH UNIT	PA FRAME	2A10-0211		1
PA CH UNIT	SCREW SEMS	SE-3 X 5		7
PA CH UNIT	PA SEAL-510	3A10-0596		1
PA CH UNIT	SCREW SEMS	SE-3 X 8		8
KEY UNIT	CHIP CONNECTOR	00-6200-510-130-000	CN405	1
KEY UNIT	SWITCH	SKHMPW		20
KEY UNIT	P.C.B.	51KEY87-1□1/4□		1
KEY UNIT	SPACER	4A10-2996		4
KEY UNIT	SCREW SEMS	SE-3 X 10		4
VR UNIT	P.C.B.	51VRS87-2□1/4□		1
VR UNIT	CHIP CONNECTOR	00-6200-508-130-000	CN407	1
VR UNIT	DIODE □□□	SLA-370MT-3F	D412	1
VR UNIT	SWITCH	SPPH23056A	SW401	1
VR UNIT	ROTARY SWITCH	RY-6459	VR401	1
VR UNIT	ROTARY SWITCH	RY-6460	VR402	1
VR UNIT	BUTTON	4A10-2988		1
VR UNIT	SCREW SEMS	SE-3 X 10		2
CONT MAIN UNIT	CHIP IC	TA75S558F-TE85R	IC401	1
CONT MAIN UNIT	CHIP IC	TC74HC373AF(TP1)	IC402	1
CONT MAIN UNIT	CHIP IC	TA78M05F-TE16L	IC403	1
CONT MAIN UNIT	IC	TA8201AK	IC404	1
CONT MAIN UNIT	IC	PQ12RH11	IC405	1
CONT MAIN UNIT	CHIP IC	NJU7662M-T1	IC406	1
CONT MAIN UNIT	CHIP IC	BU4S01F-TR	IC407	1
CONT MAIN UNIT	CHIP CAPACITOR	GRM40B102K50PT	C401	1
CONT MAIN UNIT	CHIP CAPACITOR	GRM42-6B105K16NPT	C402	1
CONT MAIN UNIT	CHIP ELECTROLYT	MVK50VC1M D55	C403	1

CONT MAIN UNIT	CHIP CAPACITOR	GRM40CH101J50PT	C404	1
CONT MAIN UNIT	CHIP ELECTROLYT	MVK16VC10M D55	C405	1
CONT MAIN UNIT	CHIP CAPACITOR	GRM42-6B104K50PT	C406	1
CONT MAIN UNIT	CHIP CAPACITOR	GRM40CH271J50PT	C407	1
CONT MAIN UNIT	CHIP CAPACITOR	GRM40CH271J50PT	C408	1
CONT MAIN UNIT	CHIP ELECTROLYT	MVK16VC10M D55	C409	1
CONT MAIN UNIT	CHIP CAPACITOR	GRM40B102K50PT	C410	1
CONT MAIN UNIT	CHIP CAPACITOR	GRM42-6B104K50PT	C411	1
CONT MAIN UNIT	CHIP ELECTROLYT	MVK16VC10M D55	C412	1
CONT MAIN UNIT	CHIP ELECTROLYT	MVK16VC10M D55	C413	1
CONT MAIN UNIT	CHIP ELECTROLYT	MVK16VC10M D55	C414	1
CONT MAIN UNIT	CHIP TANTALUM	ECST1CY105R	C417	1
CONT MAIN UNIT	C.ELECTROLYT	KMG35VB-470M	C418	1
CONT MAIN UNIT	C.ELECTROLYT	KMG35VB-470M	C419	1
CONT MAIN UNIT	C.ELECTROLYT	KMG16VB-1000M	C420	1
CONT MAIN UNIT	CHIP CAPACITOR	GRM40B102K50PT	C421	1
CONT MAIN UNIT	CHIP CAPACITOR	GRM42-6B105K16NPT	C422	1
CONT MAIN UNIT	CHIP ELECTROLYT	MVK16VC47M F55	C424	1
CONT MAIN UNIT	CHIP ELECTROLYT	MVK35VC4R7M D55	C425	1
CONT MAIN UNIT	CHIP TANTALUM	ECST1AY106R	C427	1
CONT MAIN UNIT	C.ELECTROLYT	KMG16VB-220	C428	1
CONT MAIN UNIT	CHIP CAPACITOR	GRM40B104K25PT	C429	1
CONT MAIN UNIT	CHIP CAPACITOR	GRM40B104K25PT	C430	1
CONT MAIN UNIT	CHIP CAPACITOR	GRM40B104K25PT	C431	1
CONT MAIN UNIT	MIC SOCKET	290A-88-30-119	CN401	1
CONT MAIN UNIT	CHIP CONNECTOR	00-6200-520-330-000	CN402	1
CONT MAIN UNIT	CHIP CONNECTOR	00-6200-516-230-000	CN403	1
CONT MAIN UNIT	CHIP CONNECTOR	00-6200-510-130-000	CN404	1
CONT MAIN UNIT	CHIP CONNECTOR	00-6200-508-130-000	CN406	1
CONT MAIN UNIT	CONNECTOR □□□	B 3P-VH	CN408	1
CONT MAIN UNIT	CONNECTOR	SB20-02WS	CN409	1
CONT MAIN UNIT	CONNECTOR	FF20-TAMEP1	CP401	1
CONT MAIN UNIT	LED	MU16-4101	D401	1
CONT MAIN UNIT	LED	MU16-3101	D402	1
CONT MAIN UNIT	LED	MU16-2101	D403	1
CONT MAIN UNIT	LED	MU16-5101	D404	1
CONT MAIN UNIT	CHIP DIODE	1SS355	D405	1
CONT MAIN UNIT	CHIP DIODE	1SS355	D406	1
CONT MAIN UNIT	CHIP DIODE	1SS355	D407	1
CONT MAIN UNIT	CHIP DIODE	1SS355	D408	1
CONT MAIN UNIT	CHIP DIODE	1SS355	D409	1
CONT MAIN UNIT	CHIP DIODE	DA204U-T106	D411	1
CONT MAIN UNIT	CHIP DIODE	DA204U-T106	D412	1
CONT MAIN UNIT	CHIP DIODE	1SS355	D414	1
CONT MAIN UNIT	FLAT CABLE	4A-S429	FLC402	1
CONT MAIN UNIT	FLAT CABLE	4A-S471	FLC403	1
CONT MAIN UNIT	FLAT CABLE	4A-S585	FLC405	1
CONT MAIN UNIT	FLAT CABLE	4A-S584	FLC407	1
CONT MAIN UNIT	VR □□□	GF06P 10K	FVR401	1
CONT MAIN UNIT	VR □□□	GF06P 100K	FVR402	1
CONT MAIN UNIT	CHIP VARICAP	EVM-7JSX30B14	FVR403	1
CONT MAIN UNIT	HEADPHONE JACK	S-G8022#01	J401	1
CONT MAIN UNIT	LCD	TM12832BBC	LCD401	1
CONT MAIN UNIT	CHIP TRANSISTOR	DTC114EKA-T146	Q401	1
CONT MAIN UNIT	CHIP TRANSISTOR	FMG9A-T148	Q402	1
CONT MAIN UNIT	CHIP TRANSISTOR	FMG9A-T148	Q403	1
CONT MAIN UNIT	CHIP TRANSISTOR	2SD1766-T100	Q404	1
CONT MAIN UNIT	CHIP TRANSISTOR	2SD2351-T106	Q405	1
CONT MAIN UNIT	CHIP TRANSISTOR	2SJ503	Q406	1
CONT MAIN UNIT	CHIP TRANSISTOR	UMC2-TR	Q407	1

CONT MAIN UNIT	CHIP TRANSISTOR	2SA1434-TB	Q408	1
CONT MAIN UNIT	CHIP TRANSISTOR	2SA1434-TB	Q409	1
CONT MAIN UNIT	CHIP TRANSISTOR	2SA1434-TB	Q410	1
CONT MAIN UNIT	CHIP RESISTOR	MCR10EZHJ000	R401	1
CONT MAIN UNIT	CHIP RESISTOR	MCR10EZHJ153	R405	1
CONT MAIN UNIT	CHIP RESISTOR	MCR10EZHJ102	R406	1
CONT MAIN UNIT	CHIP RESISTOR	MCR10EZHJ103	R407	1
CONT MAIN UNIT	CHIP RESISTOR	MCR10EZHJ273	R408	1
CONT MAIN UNIT	CHIP RESISTOR	MCR10EZHJ104	R409	1
CONT MAIN UNIT	CHIP RESISTOR	MCR10EZHJ104	R410	1
CONT MAIN UNIT	CHIP RESISTOR	MCR10EZHJ473	R411	1
CONT MAIN UNIT	CHIP RESISTOR	MCR10EZHJ222	R412	1
CONT MAIN UNIT	CHIP RESISTOR	MCR10EZHJ222	R414	1
CONT MAIN UNIT	CHIP RESISTOR	MCR10EZHJ560	R415	1
CONT MAIN UNIT	CHIP RESISTOR	MCR10EZHJ560	R416	1
CONT MAIN UNIT	CHIP RESISTOR	MCR10EZHJ221	R417	1
CONT MAIN UNIT	CHIP RESISTOR	MCR10EZHJ330	R418	1
CONT MAIN UNIT	CHIP RESISTOR	MCR10EZHJ473	R419	1
CONT MAIN UNIT	CHIP RESISTOR	MCR10EZHJ183	R420	1
CONT MAIN UNIT	CHIP RESISTOR	MCR10EZHJ822	R421	1
CONT MAIN UNIT	CHIP RESISTOR	MCR10EZHJ470	R422	1
CONT MAIN UNIT	CHIP RESISTOR	MCR10EZHJ470	R423	1
CONT MAIN UNIT	CHIP RESISTOR	MCR10EZHJ223	R424	1
CONT MAIN UNIT	CHIP RESISTOR	MCR10EZHJ472	R425	1
CONT MAIN UNIT	CHIP RESISTOR	MCR10EZHJ472	R426	1
CONT MAIN UNIT	CHIP RESISTOR	MCR10EZHJ181	R427	1
CONT MAIN UNIT	CHIP RESISTOR	MCR10EZHJ470	R428	1
CONT MAIN UNIT	CHIP RESISTOR	MCR10EZHJ470	R429	1
CONT MAIN UNIT	CHIP RESISTOR	MCR10EZHJ472	R430	1
CONT MAIN UNIT	CHIP RESISTOR	MCR10EZHJ472	R431	1
CONT MAIN UNIT	CHIP RESISTOR	MCR10EZHJ472	R432	1
CONT MAIN UNIT	CHIP RESISTOR	MCR10EZHJ472	R433	1
CONT MAIN UNIT	CHIP RESISTOR	MCR10EZHJ472	R434	1
CONT MAIN UNIT	CHIP RESISTOR	MCR10EZHJ472	R435	1
CONT MAIN UNIT	CHIP RESISTOR	MCR10EZHJ472	R436	1
CONT MAIN UNIT	CHIP RESISTOR	MCR10EZHJ472	R437	1
CONT MAIN UNIT	CHIP RESISTOR	MCR10EZHJ472	R438	1
CONT MAIN UNIT	CHIP RESISTOR	MCR10EZHJ103	R439	1
CONT MAIN UNIT	CHIP RESISTOR	MCR10EZHJ471	R440	1
CONT MAIN UNIT	CHIP RESISTOR	MCR10EZHJ472	R441	1
CONT MAIN UNIT	CHIP RESISTOR	MCR10EZHJ103	R442	1
CONT MAIN UNIT	CHIP RESISTOR	MCR18EZHJ4R7	R444	1
CONT MAIN UNIT	CHIP RESISTOR	MCR10EZHJ222	R445	1
CONT MAIN UNIT	CHIP RESISTOR	MCR10EZHJ563	R446	1
CONT MAIN UNIT	CHIP RESISTOR	MCR18EZHJ100	R447	1
CONT MAIN UNIT	CHIP RESISTOR	MCR10EZHJ333	R448	1
CONT MAIN UNIT	CHIP RESISTOR	MCR10EZHJ103	R449	1
CONT MAIN UNIT	CHIP RESISTOR	MCR10EZHJ332	R450	1
CONT MAIN UNIT	CHIP RESISTOR	MCR10EZHJ000	R451	1
CONT MAIN UNIT	CHIP RESISTOR	MCR10EZHJ822	R452	1
CONT MAIN UNIT	CHIP RESISTOR	MCR10EZHJ152	R453	1
CONT MAIN UNIT	CHIP RESISTOR	MCR10EZHJ224	R454	1
CONT MAIN UNIT	CHIP RESISTOR	MCR10EZHJ103	R455	1
CONT MAIN UNIT	CHIP RESISTOR	MCR10EZHJ104	R456	1
CONT MAIN UNIT	CHIP RESISTOR	MCR10EZHJ104	R457	1
CONT MAIN UNIT	CHIP RESISTOR	MCR10EZHJ103	R458	1
CONT MAIN UNIT	CHIP THERMISTER	TN10-4C103KT	TH401	1
CONT MAIN UNIT	COLLAR	4A10-3045		8
CONT MAIN UNIT	CORE	BP53RD030310120M	CN402-CN1	1
CONT MAIN UNIT	P.C.B.	51FR087-3□1/2□		1

CONT MAIN UNIT	SCREW SEMS	SE-3 X 10		6
CONT MAIN UNIT	SPACER	4A10-3004A		3
CONT MAIN UNIT	PLATE	4A10-3079		1
CONT UNIT	FRONT PANEL	2A10-0213		1
CONT UNIT	BUTTON	4A10-2985		1
CONT UNIT	WINDOW	4A10-2987		1
CONT UNIT	KNOB	4A10-2989		2
CONT UNIT	SP GRILL	4A10-3001		1
CONT UNIT	SP SPACER	4A10-3026		1
CONT UNIT	TAPE FOR WINDOW	4A10-3047		1
CONT UNIT	CONNECTOR CABLE	□[4A-S499		1
CONT UNIT	SPEAKER	KS-110		1
CONT UNIT	SCREW PAN TP	PN-3 X 8 TP		4
IF UNIT/NORMAL	CHIP IC	TK10487M-TR	IC106	1
IF UNIT/NORMAL	CHIP CAPACITOR	GRM40CK010C50PT	C158	1
IF UNIT/NORMAL	CHIP CAPACITOR	GRM40CK010C50PT	C159	1
IF UNIT/NORMAL	CHIP CAPACITOR	GRM40CH040C50PT	C160	1
IF UNIT/NORMAL	CHIP CAPACITOR	GRM40CH120J50PT	C161	1
IF UNIT/NORMAL	CHIP CAPACITOR	GRM40CH220J50PT	C162	1
IF UNIT/NORMAL	CHIP CAPACITOR	GRM40B222K50PT	C163	1
IF UNIT/NORMAL	CHIP CAPACITOR	GRM40B102K50PT	C164	1
IF UNIT/NORMAL	CHIP CAPACITOR	GRM40B102K50PT	C165	1
IF UNIT/NORMAL	CHIP CAPACITOR	GRM40B153K50PT	C167	1
IF UNIT/NORMAL	CHIP CAPACITOR	GRM40B102K50PT	C168	1
IF UNIT/NORMAL	CHIP CAPACITOR	GRM40CH220J50PT	C169	1
IF UNIT/NORMAL	CHIP CAPACITOR	GRM40B222K50PT	C170	1
IF UNIT/NORMAL	CHIP CAPACITOR	GRM40CH470J50PT	C171	1
IF UNIT/NORMAL	CHIP CAPACITOR	GRM40B471K50PT	C172	1
IF UNIT/NORMAL	CHIP CAPACITOR	GRM40CH331J50PT	C173	1
IF UNIT/NORMAL	CHIP CAPACITOR	GRM40B223K25PT	C174	1
IF UNIT/NORMAL	CHIP CAPACITOR	GRM40B222K50PT	C175	1
IF UNIT/NORMAL	CHIP TANTALUM	ECST1CY684R	C176	1
IF UNIT/NORMAL	CHIP TANTALUM	ECST1VY334R	C177	1
IF UNIT/NORMAL	CHIP CAPACITOR	GRM42-6B105K16NPT	C178	1
IF UNIT/NORMAL	CHIP CAPACITOR	GRM40B473K25PT	C179	1
IF UNIT/NORMAL	CHIP CAPACITOR	GRM40B473K25PT	C180	1
IF UNIT/NORMAL	CHIP CAPACITOR	GRM40B473K25PT	C181	1
IF UNIT/NORMAL	CHIP CAPACITOR	GRM40B473K25PT	C182	1
IF UNIT/NORMAL	CHIP CAPACITOR	GRM40CH101J50PT	C183	1
IF UNIT/NORMAL	CHIP CAPACITOR	GRM42-6B105K16NPT	C184	1
IF UNIT/NORMAL	CHIP CAPACITOR	GRM40B153K50PT	C185	1
IF UNIT/NORMAL	CHIP CAPACITOR	GRM40B153K50PT	C186	1
IF UNIT/NORMAL	CHIP CAPACITOR	GRM40CH151J50PT	C190	1
IF UNIT/NORMAL	DISCRIMINATOR	CDBM455C7	CD101	1
IF UNIT/NORMAL	CERAMIC FILTER	CFWM455G	CF101	1
IF UNIT/NORMAL	CERAMIC FILTER	CFWM455E	CF102	1
IF UNIT/NORMAL	CONNECTOR	LPC-2T7M	CP103	1
IF UNIT/NORMAL	CONNECTOR	LPC-6T7M	CP104	1
IF UNIT/NORMAL	CHIP DIODE	1SS356-TW11	D115	1
IF UNIT/NORMAL	CHIP DIODE	1SS356-TW11	D116	1
IF UNIT/NORMAL	CHIP DIODE	1SS355	D117	1
IF UNIT/NORMAL	CHIP DIODE	RB501V-40TE-17	D123	1
IF UNIT/NORMAL	CHIP VARICAP	EVM-7JSX30B24	FVR101	1
IF UNIT/NORMAL	CHIP INDUCTOR	NL322522T-R68J	L115	1
IF UNIT/NORMAL	CHIP INDUCTOR	ELJ-NCR47KF	L117	1
IF UNIT/NORMAL	CHIP TRANSISTOR	2SC4250(TE85R)	Q113	1
IF UNIT/NORMAL	CHIP TRANSISTOR	DTC314TK-T146	Q114	1
IF UNIT/NORMAL	CHIP FET	2SK209-Y(TE85R)	Q115	1
IF UNIT/NORMAL	CHIP FET	2SK209-Y(TE85R)	Q116	1
IF UNIT/NORMAL	CHIP TRANSISTOR	2SK3018-T106	Q127	1

IF UNIT/NORMAL	CHIP RESISTOR	MCR10EZHJ104	R160	1
IF UNIT/NORMAL	CHIP CAPACITOR	GRM40CK1R5C50PT	R161	1
IF UNIT/NORMAL	CHIP RESISTOR	MCR10EZHJ000	R162	1
IF UNIT/NORMAL	CHIP RESISTOR	MCR10EZHJ471	R163	1
IF UNIT/NORMAL	CHIP RESISTOR	MCR10EZHJ561	R164	1
IF UNIT/NORMAL	CHIP RESISTOR	MCR10EZHJ331	R165	1
IF UNIT/NORMAL	CHIP RESISTOR	MCR10EZHJ122	R166	1
IF UNIT/NORMAL	CHIP RESISTOR	MCR10EZHJ103	R167	1
IF UNIT/NORMAL	CHIP RESISTOR	MCR10EZHJ474	R168	1
IF UNIT/NORMAL	CHIP RESISTOR	MCR10EZHJ000	R169	1
IF UNIT/NORMAL	CHIP RESISTOR	MCR10EZHJ392	R170	1
IF UNIT/NORMAL	CHIP RESISTOR	MCR10EZHJ821	R171	1
IF UNIT/NORMAL	CHIP RESISTOR	MCR10EZHJ103	R172	1
IF UNIT/NORMAL	CHIP RESISTOR	MCR10EZHJ104	R173	1
IF UNIT/NORMAL	CHIP RESISTOR	MCR10EZHJ223	R174	1
IF UNIT/NORMAL	CHIP RESISTOR	MCR10EZHJ102	R175	1
IF UNIT/NORMAL	CHIP RESISTOR	MCR10EZHJ392	R176	1
IF UNIT/NORMAL	CHIP RESISTOR	MCR10EZHJ272	R177	1
IF UNIT/NORMAL	CHIP RESISTOR	MCR10EZHJ154	R178	1
IF UNIT/NORMAL	CHIP RESISTOR	MCR10EZHJ154	R179	1
IF UNIT/NORMAL	CHIP RESISTOR	MCR10EZHJ154	R180	1
IF UNIT/NORMAL	CHIP RESISTOR	MCR10EZHJ103	R181	1
IF UNIT/NORMAL	CHIP RESISTOR	MCR10EZHJ753	R182	1
IF UNIT/NORMAL	CRYSTAL FILTER	48.045MHZ	X101	1
IF UNIT/NORMAL	CRYSTAL FILTER	48S15B	X102A	1
IF UNIT/NORMAL	CRYSTAL FILTER	48S15B	X102B	1
IF UNIT/NORMAL	CF COVER	4A10-1624		2
IF UNIT/NORMAL	P.C.B.	51IF86-2□1/4□		1
IF UNIT/NORMAL	SCREW SEMS	SE-3 X 6		2
LOG UNIT	CHIP COIL	FBMH3216HM501NT	BL1	1
LOG UNIT	CHIP COIL	BLM21B421SPT	BL2	1
LOG UNIT	CHIP COIL	BLM21B421SPT	BL3	1
LOG UNIT	CHIP COIL	BLM21B421SPT	BL4	1
LOG UNIT	CHIP COIL	BLM21B421SPT	BL5	1
LOG UNIT	CHIP COIL	BLM21B421SPT	BL6	1
LOG UNIT	CHIP COIL	BLM21B421SPT	BL7	1
LOG UNIT	CHIP ELECTROLYT	MVK35VC4R7M D55	C1	1
LOG UNIT	CHIP TANTALUM	ECST1CY105R	C2	1
LOG UNIT	CHIP TANTALUM	ECST1CY105R	C3	1
LOG UNIT	CHIP ELECTROLYT	MVK16VC47M F55	C4	1
LOG UNIT	CHIP CAPACITOR	GRM40B104K25PT	C5	1
LOG UNIT	CHIP CAPACITOR	GRM40B104K25PT	C6	1
LOG UNIT	CHIP CAPACITOR	GRM40B222K50PT	C7	1
LOG UNIT	CHIP CAPACITOR	GRM40CH331J50PT	C8	1
LOG UNIT	DISK CAPACITOR	EECS5R5H474	C9	1
LOG UNIT	CHIP TANTALUM	ECST1VY224R	C10	1
LOG UNIT	CHIP CAPACITOR	GRM40B103K50PT	C11	1
LOG UNIT	CHIP CAPACITOR	GRM42-6B225K16NPT	C12	1
LOG UNIT	CHIP CAPACITOR	GRM40CH221J50PT	C13	1
LOG UNIT	CHIP CAPACITOR	GRM40CH470J50PT	C14	1
LOG UNIT	CHIP CAPACITOR	GRM40B103K50PT	C15	1
LOG UNIT	CHIP TANTALUM	ECST1CY105R	C16	1
LOG UNIT	CHIP TANTALUM	ECST1CY105R	C17	1
LOG UNIT	CHIP CAPACITOR	GRM40B104K25PT	C19	1
LOG UNIT	CHIP CAPACITOR	GRM40B473K25PT	C20	1
LOG UNIT	CHIP CAPACITOR	GRM40B104K25PT	C21	1
LOG UNIT	CHIP CAPACITOR	GRM40CH470J50PT	C22	1
LOG UNIT	CHIP CAPACITOR	GRM40B104K25PT	C23	1
LOG UNIT	CHIP CAPACITOR	GRM42-6B225K16NPT	C24	1
LOG UNIT	CHIP TANTALUM	ECST1CY105R	C25	1

LOG UNIT	CHIP CAPACITOR	GRM40B104K25PT	C27	1
LOG UNIT	CHIP CAPACITOR	GRM40B104K25PT	C28	1
LOG UNIT	CHIP CAPACITOR	GRM40CH820J50PT	C31	1
LOG UNIT	CHIP CAPACITOR	GRM40B104K25PT	C32	1
LOG UNIT	CHIP CAPACITOR	GRM40B104K25PT	C33	1
LOG UNIT	CHIP CAPACITOR	GRM40B103K50PT	C36	1
LOG UNIT	CHIP CAPACITOR	GRM40B473K25PT	C37	1
LOG UNIT	CHIP CAPACITOR	GRM40CH220J50PT	C38	1
LOG UNIT	CHIP CAPACITOR	GRM40CH220J50PT	C39	1
LOG UNIT	CHIP TANTALUM	ECST1EY474R	C40	1
LOG UNIT	CHIP CAPACITOR	GRM40B473K25PT	C42	1
LOG UNIT	CHIP CAPACITOR	GRM40CH330J50PT	C43	1
LOG UNIT	CHIP CAPACITOR	GRM40B473K25PT	C44	1
LOG UNIT	CHIP CAPACITOR	GRM40CH220J50PT	C45	1
LOG UNIT	CHIP CAPACITOR	GRM40CH220J50PT	C46	1
LOG UNIT	CHIP CAPACITOR	GRM40B103K50PT	C47	1
LOG UNIT	CHIP CAPACITOR	GRM40B103K50PT	C48	1
LOG UNIT	CHIP CAPACITOR	GRM40B103K50PT	C49	1
LOG UNIT	CHIP CAPACITOR	GRM40B333K25PT	C50	1
LOG UNIT	CHIP CAPACITOR	GRM40CH820J50PT	C51	1
LOG UNIT	CHIP CAPACITOR	GRM40B103K50PT	C52	1
LOG UNIT	CHIP TANTALUM	ECST1CY105R	C53	1
LOG UNIT	CHIP TANTALUM	ECST1CY105R	C54	1
LOG UNIT	CHIP CAPACITOR	GRM40CH470J50PT	C55	1
LOG UNIT	CHIP CAPACITOR	GRM42-6B225K16NPT	C58	1
LOG UNIT	CHIP TANTALUM	ECST1VY224R	C59	1
LOG UNIT	CHIP CAPACITOR	GRM40B104K25PT	C60	1
LOG UNIT	CHIP CAPACITOR	GRM40B104K25PT	C61	1
LOG UNIT	CHIP CAPACITOR	GRM40B473K25PT	C62	1
LOG UNIT	CHIP CAPACITOR	GRM40B473K25PT	C63	1
LOG UNIT	CHIP CAPACITOR	GRM40B104K25PT	C64	1
LOG UNIT	CHIP CAPACITOR	GRM40B682K50PT	C65	1
LOG UNIT	CHIP CAPACITOR	GRM40B473K25PT	C66	1
LOG UNIT	CHIP CAPACITOR	GRM40CH470J50PT	C67	1
LOG UNIT	CHIP CAPACITOR	GRM40B104K25PT	C68	1
LOG UNIT	CHIP CAPACITOR	GRM42-6B105K16NPT	C69	1
LOG UNIT	CHIP CAPACITOR	GRM40B104K25PT	C70	1
LOG UNIT	CHIP ELECTROLYT	MVK16VC47M F55	C71	1
LOG UNIT	CHIP TANTALUM	ECST1EY474R	C72	1
LOG UNIT	CHIP CAPACITOR	GRM40B104K25PT	C73	1
LOG UNIT	CHIP ELECTROLYT	MVK16VC10M D55	C74	1
LOG UNIT	CHIP CAPACITOR	GRM40B103K50PT	C75	1
LOG UNIT	CHIP CAPACITOR	GRM40B104K25PT	C76	1
LOG UNIT	CHIP ELECTROLYT	MVK16VC47M F55	C77	1
LOG UNIT	CHIP ELECTROLYT	MVK16VC47M F55	C78	1
LOG UNIT	CHIP CAPACITOR	GRM40B104K25PT	C79	1
LOG UNIT	CHIP CAPACITOR	GRM40B102K50PT	C80	1
LOG UNIT	CHIP CAPACITOR	GRM40B102K50PT	C81	1
LOG UNIT	CHIP CAPACITOR	GRM40B102K50PT	C82	1
LOG UNIT	CHIP CAPACITOR	GRM40B102K50PT	C83	1
LOG UNIT	CHIP CAPACITOR	GRM40B102K50PT	C84	1
LOG UNIT	CHIP CAPACITOR	GRM40B102K50PT	C85	1
LOG UNIT	CHIP CONNECTOR	00-6200-520-330-000	CN1	1
LOG UNIT	CHIP CONNECTOR	00-6200-516-230-000	CN2	1
LOG UNIT	CHIP CONNECTOR	00-6200-516-230-000	CN3	1
LOG UNIT	CHIP CONNECTOR	236A-08-90-134	CN4	1
LOG UNIT	CHIP CONNECTOR	236A-08-90-134	CN5	1
LOG UNIT	CONNECTOR	SB20-03WS	CN6	1
LOG UNIT	CHIP CONNECTOR	00-6200-516-230-000	CN7	1
LOG UNIT	CHIP CONNECTOR	00-6200-516-230-000	CN8	1

LOG UNIT	CHIP CONNECTOR	00-6200-520-330-000	CN9	1
LOG UNIT	CHIP DIODE	1SS355	D1	1
LOG UNIT	CHIP DIODE	1SS355	D2	1
LOG UNIT	CHIP DIODE	1SS355	D3	1
LOG UNIT	CHIP DIODE	1SS355	D4	1
LOG UNIT	CHIP DIODE	1SS355	D5	1
LOG UNIT	CHIP DIODE	RB501V-40TE-17	D7	1
LOG UNIT	CHIP DIODE	1SS355	D8	1
LOG UNIT	CHIP DIODE	DAP202U-T106	D9	1
LOG UNIT	CHIP DIODE	DAP202U-T106	D10	1
LOG UNIT	CHIP DIODE	RB501V-40TE-17	D11	1
LOG UNIT	CHIP DIODE	DAN202U-T106	D12	1
LOG UNIT	CHIP DIODE	1SS355	D13	1
LOG UNIT	CHIP DIODE	1SS355	D14	1
LOG UNIT	CHIP DIODE	1SS355	D15	1
LOG UNIT	CHIP TRIMMER	TZV02R200A110	FVC1	1
LOG UNIT	CHIP VARICAP	EVM-7JSX30B24	FVR1	1
LOG UNIT	CHIP VARICAP	EVM-7JSX30B25	FVR2	1
LOG UNIT	CHIP VARICAP	EVM-7JSX30B54	FVR3	1
LOG UNIT	CHIP IC	UPD78F0058GC	IC1	1
LOG UNIT	IC	AK2344	IC2	1
LOG UNIT	IC	AK2344	IC3	1
LOG UNIT	CHIP IC	AN78L05M	IC4	1
LOG UNIT	CHIP IC	AN78L05M	IC5	1
LOG UNIT	CHIP IC	NJM2405M-T1	IC6	1
LOG UNIT	EE ROM	HN58C65FP-25	IC7	1
LOG UNIT	CHIP IC	TC74HC373AF(TP1)	IC8	1
LOG UNIT	CHIP IC	RN5VL22AA-TL	IC9	1
LOG UNIT	CHIP IC	TA75S01F(TE85R)	IC10	1
LOG UNIT	CHIP IC	BU4S81-TR	IC11	1
LOG UNIT	CHIP IC	BU4S01-TR	IC12	1
LOG UNIT	CHIP IC	TS272CD	IC13	1
LOG UNIT	CHIP IC	TS272CD	IC14	1
LOG UNIT	CHIP IC	BU4S81-TR	IC15	1
LOG UNIT	CHIP IC	NJM2073M-T1	IC16	1
LOG UNIT	CHIP IC	BU4S66-TR	IC17	1
LOG UNIT	CHIP IC	TC7W74FU(TE12L)	IC18	1
LOG UNIT	JUMPER PLUG	DIC-149-3P	JP1	1
LOG UNIT	JUMPER SOCKET	DIC-128	JS	1
LOG UNIT	CHIP FET	2SK209-Y(TE85R)	Q1	1
LOG UNIT	CHIP FET	2SK209-Y(TE85R)	Q2	1
LOG UNIT	CHIP FET	2SK209-Y(TE85R)	Q3	1
LOG UNIT	CHIP FET	2SK209-Y(TE85R)	Q4	1
LOG UNIT	CHIP TRANSISTOR	RN6001(TE12R,C)	Q6	1
LOG UNIT	CHIP TRANSISTOR	DTC124EKA-T146	Q7	1
LOG UNIT	CHIP RESISTOR	MCR10EZHJ104	R00	1
LOG UNIT	CHIP RESISTOR	MCR10EZHJ823	R01	1
LOG UNIT	CHIP RESISTOR	MCR10EZHJ562	R02	1
LOG UNIT	CHIP RESISTOR	MCR10EZHJ225	R03	1
LOG UNIT	CHIP RESISTOR	MCR10EZHJ273	R04	1
LOG UNIT	CHIP RESISTOR	MCR10EZHJ473	R05	1
LOG UNIT	CHIP RESISTOR	MCR10EZHJ154	R1	1
LOG UNIT	CHIP RESISTOR	MCR10EZHJ113	R2	1
LOG UNIT	CHIP RESISTOR	MCR10EZHJ225	R3	1
LOG UNIT	CHIP RESISTOR	MCR10EZHJ184	R4	1
LOG UNIT	CHIP RESISTOR	MCR10EZHJ105	R5	1
LOG UNIT	CHIP RESISTOR	MCR10EZHJ273	R6	1
LOG UNIT	CHIP RESISTOR	MCR10EZHJ104	R7	1
LOG UNIT	CHIP RESISTOR	MCR10EZHJ273	R8	1
LOG UNIT	CHIP RESISTOR	MCR10EZHJ104	R9	1

LOG UNIT	CHIP RESISTOR	MCR10EZHJ473	R10	1
LOG UNIT	CHIP RESISTOR	MCR10EZHJ752	R11	1
LOG UNIT	CHIP RESISTOR	MCR10EZHJ682	R12	1
LOG UNIT	CHIP RESISTOR	MCR10EZHJ101	R13	1
LOG UNIT	CHIP RESISTOR	MCR10EZHJ103	R14	1
LOG UNIT	CHIP RESISTOR	MCR10EZHJ393	R15	1
LOG UNIT	CHIP RESISTOR	MCR10EZHJ153	R16	1
LOG UNIT	CHIP RESISTOR	MCR10EZHJ103	R17	1
LOG UNIT	CHIP RESISTOR	MCR10EZHJ473	R18	1
LOG UNIT	CHIP RESISTOR	MCR10EZHJ223	R19	1
LOG UNIT	CHIP RESISTOR	MCR10EZHJ154	R20	1
LOG UNIT	CHIP RESISTOR	MCR10EZHJ104	R21	1
LOG UNIT	CHIP RESISTOR	MCR10EZHJ472	R22	1
LOG UNIT	CHIP RESISTOR	MCR10EZHJ104	R23	1
LOG UNIT	CHIP RESISTOR	MCR10EZHJ154	R24	1
LOG UNIT	CHIP RESISTOR	MCR10EZHJ183	R25	1
LOG UNIT	CHIP RESISTOR	MCR10EZHJ473	R26	1
LOG UNIT	CHIP RESISTOR	MCR10EZHJ222	R27	1
LOG UNIT	CHIP RESISTOR	MCR10EZHJ823	R28	1
LOG UNIT	CHIP RESISTOR	MCR10EZHJ154	R29	1
LOG UNIT	CHIP RESISTOR	MCR10EZHJ154	R30	1
LOG UNIT	CHIP RESISTOR	MCR10EZHJ103	R32	1
LOG UNIT	CHIP RESISTOR	MCR10EZHJ473	R33	1
LOG UNIT	CHIP RESISTOR	MCR10EZHJ154	R34	1
LOG UNIT	CHIP RESISTOR	MCR10EZHJ223	R35	1
LOG UNIT	CHIP RESISTOR	MCR10EZHJ223	R36	1
LOG UNIT	CHIP RESISTOR	MCR10EZHJ104	R37	1
LOG UNIT	CHIP RESISTOR	MCR10EZHJ105	R38	1
LOG UNIT	CHIP RESISTOR	MCR10EZHJ472	R39	1
LOG UNIT	CHIP RESISTOR	MCR10EZHJ102	R40	1
LOG UNIT	CHIP RESISTOR	MCR10EZHJ472	R41	1
LOG UNIT	CHIP RESISTOR	MCR10EZHJ473	R42	1
LOG UNIT	CHIP RESISTOR	MCR10EZHJ563	R43	1
LOG UNIT	CHIP RESISTOR	MCR10EZHJ103	R44	1
LOG UNIT	CHIP RESISTOR	MCR10EZHJ000	R45	1
LOG UNIT	CHIP RESISTOR	MCR10EZHJ000	R46	1
LOG UNIT	CHIP RESISTOR	MCR10EZHJ223	R47	1
LOG UNIT	CHIP RESISTOR	MCR10EZHJ103	R49	1
LOG UNIT	CHIP RESISTOR	MCR10EZHJ105	R50	1
LOG UNIT	CHIP RESISTOR	MCR10EZHJ823	R52	1
LOG UNIT	CHIP RESISTOR	MCR10EZHJ333	R53	1
LOG UNIT	CHIP RESISTOR	MCR10EZHJ103	R54	1
LOG UNIT	CHIP RESISTOR	MCR10EZHJ154	R55	1
LOG UNIT	CHIP RESISTOR	MCR10EZHJ333	R56	1
LOG UNIT	CHIP RESISTOR	MCR10EZHJ683	R57	1
LOG UNIT	CHIP RESISTOR	MCR10EZHJ104	R58	1
LOG UNIT	CHIP RESISTOR	MCR10EZHJ104	R59	1
LOG UNIT	CHIP RESISTOR	MCR10EZHJ154	R60	1
LOG UNIT	CHIP RESISTOR	MCR10EZHJ103	R61	1
LOG UNIT	CHIP RESISTOR	MCR10EZHJ823	R62	1
LOG UNIT	CHIP RESISTOR	MCR10EZHJ103	R63	1
LOG UNIT	CHIP RESISTOR	MCR10EZHJ124	R64	1
LOG UNIT	CHIP RESISTOR	MCR10EZHJ104	R65	1
LOG UNIT	CHIP RESISTOR	MCR10EZHJ104	R66	1
LOG UNIT	CHIP RESISTOR	MCR10EZHJ473	R67	1
LOG UNIT	CHIP RESISTOR	MCR10EZHJ124	R68	1
LOG UNIT	CHIP RESISTOR	MCR10EZHJ223	R69	1
LOG UNIT	CHIP RESISTOR	MCR10EZHJ154	R70	1
LOG UNIT	CHIP RESISTOR	MCR10EZHJ104	R71	1
LOG UNIT	CHIP RESISTOR	MCR10EZHJ154	R72	1

LOG UNIT	CHIP RESISTOR	MCR10EZHJ184	R73	1
LOG UNIT	CHIP RESISTOR	MCR10EZHJ3R3	R74	1
LOG UNIT	CHIP RESISTOR	MCR10EZHJ474	R75	1
LOG UNIT	CHIP RESISTOR	MCR10EZHJ472	R76	1
LOG UNIT	CHIP RESISTOR	MCR50EZHJ4R7	R77	1
LOG UNIT	CHIP RESISTOR	MCR10EZHJ472	R78	1
LOG UNIT	CHIP RESISTOR	MCR10EZHJ104	R79	1
LOG UNIT	CHIP RESISTOR	MCR10EZHJ473	R80	1
LOG UNIT	CHIP RESISTOR	MCR10EZHJ103	R82	1
LOG UNIT	CHIP RESISTOR	MCR10EZHJ104	R83	1
LOG UNIT	CHIP RESISTOR	MCR10EZHJ473	R84	1
LOG UNIT	CHIP RESISTOR	MCR10EZHJ472	R85	1
LOG UNIT	CHIP RESISTOR	MCR10EZHJ103	R86	1
LOG UNIT	CHIP RESISTOR	MCR10EZHJ271	R87	1
LOG UNIT	CHIP RESISTOR	MCR10EZHJ271	R88	1
LOG UNIT	CHIP RESISTOR	MCR10EZHJ473	R89	1
LOG UNIT	CHIP RESISTOR	MCR10EZHJ154	R90	1
LOG UNIT	CHIP RESISTOR	MCR10EZHJ223	R91	1
LOG UNIT	CHIP RESISTOR	MCR10EZHJ273	R94	1
LOG UNIT	CHIP RESISTOR	MCR10EZHJ154	R95	1
LOG UNIT	CHIP RESISTOR	MCR10EZHJ472	R96	1
LOG UNIT	CHIP RESISTOR	MCR10EZHJ394	R97	1
LOG UNIT	CHIP RESISTOR	MCR10EZHJ102	R98	1
LOG UNIT	CHIP RESISTOR	MCR10EZHJ103	R99	1
LOG UNIT	CHIP R ARRAY	MNR14E0ABJ472	RA1	1
LOG UNIT	CHIP R ARRAY	MNR14E0ABJ472	RA2	1
LOG UNIT	CHIP R ARRAY	MNR14E0ABJ472	RA3	1
LOG UNIT	CHIP CHECKER	RCT	TP1	1
LOG UNIT	CRYSTAL	DS-MAT309(4.19MHZ)	X1	1
LOG UNIT	CRYSTAL	SMX-3F(3.6864MHZ)	X2	1
LOG UNIT	CRYSTAL	SMX-3F(3.6864MHZ)	X3	1
LOG UNIT	P.C.B.	51LOG87-4□1/2□		1
DC UNIT	DC PLUG	21-3B	CN701	1
DC UNIT	CONNECTOR	SB20-02WS	CN702	1
DC UNIT	CONNECTOR	SB20-02WS	CN703	1
DC UNIT	TERMINAL	42822-2	CP701	1
DC UNIT	TERMINAL	42117-2	CP702	1
DC UNIT	CONNECTOR	4A-S603	CP703	1
DC UNIT	DIODE □□□	20DL2C	D701	1
DC UNIT	CHIP DIODE	1SR154-400TE25	D702	1
DC UNIT	CHIP TRANSISTOR	2SD2153	Q701	1
DC UNIT	P.C.B.	51DC99□1/4□		1
DS UNIT	CHIP CONNECTOR	00-6200-520-330-000	CN601	1
DS UNIT	CHIP CONNECTOR	00-6200-516-230-000	CN602	1
DS UNIT	CONNECTOR	DELC-J25SAF-20L9	CN603	1
DS UNIT	CONNECTOR	DELC-J9SAF-20L9	CN604	1
DS UNIT	P.C.B.	51DSUB9X□1/4□		1
ASSY	FLAT CABLE	4A-S471	FL102(RX)	1
ASSY	FLAT CABLE	4A-S471	FL202(TX)	1
ASSY	FLAT CABLE	4A-S579	FL601	1
ASSY	FLAT CABLE	4A-S580	FL602	1
ASSY	BNC CONNECTOR	BNC-J/NJ(F)		1
ASSY	BNC CONNECTOR	BNC-PA-JJ		1
ASSY	BOTTOM COVER	3A10-0571		1
ASSY	CHASSIS-KG510	3A10-0572		1
ASSY	DC SOCKET	21-3A		1
ASSY	FUSE	FGBO 125V 20A		2
ASSY	FUSE HOLDER	SN-2054#01C		1
ASSY	HANDLE	3A10-0570		2
ASSY	HEAT SINK	2A10-0209		1

ASSY	NUT	NT-3	4
ASSY	PLATE	4A10-2995	1
ASSY	PROTECTOR(L)	3A10-0579	1
ASSY	PROTECTOR(R)	3A10-0578	1
ASSY	REAR PANEL	2A10-0212A	1
ASSY	RUBBER CUSHION	SJ-5009	4
ASSY	SCREW BIND(BLK)	BDB-3 X 5	8
ASSY	SCREW FLAT	OV-3 X 8	3
ASSY	SCREW OVAL(BLK)	OVB-4 X 8	2
ASSY	SCREW SEMS	SE-2.6 X 8	4
ASSY	SCREW SEMS	SE-3 X 10	4
ASSY	SCREW SEMS	SE-3 X 8	31
ASSY	SCREW SEMS(BLK)	SEB-4 X 10	19
ASSY	SCREW SEMS(BLK)	SEB-4 X 15	4
ASSY	SIDE(L)	2A10-0207	1
ASSY	SIDE(R)	2A10-0208	1
ASSY	SPRING	FOT-233-00	2
ASSY	TR HEAT SINK	4A10-3027	1
ASSY	WASHER	FW-3(L)	4

MODEL	KG510 VHF	CODE : KG510-20B50K	UNIT : 510KEY UNIT	
NO.	PARTS NAME	DESCRIPTION	CIRCUIT REFERENCE	
1	CHIP CONNECTOR	00-6200-510-130-000	CN405	1
2	SWITCH	SKHMPW		20
3	P.C.B.	51KEY87-1□1/4□		1
4	SPACER	4A10-2996		4
5	SCREW SEMS	SE-3 X 10		4
MODEL	KG510 VHF	CODE : KG510-20B50K	UNIT : 510VR UNIT	
NO.	PARTS NAME	DESCRIPTION	CIRCUIT REFERENCE	
6	P.C.B.	51VRS87-2□1/4□		1
7	CHIP CONNECTOR	00-6200-508-130-000	CN407	1
8	DIODE □□□	SLA-370MT-3F	D412	1
9	SWITCH	SPPH23056A	SW401	1
10	ROTARY SWITCH	RY-6459	VR401	1
11	ROTARY SWITCH	RY-6460	VR402	1
12	BUTTON	4A10-2988		1
13	SCREW SEMS	SE-3 X 10		2
MODEL	KG510 VHF	CODE : KG510-20B50K	UNIT : 510CONTROL MAIN UNIT	
NO.	PARTS NAME	DESCRIPTION	CIRCUIT REFERENCE	
14	CHIP IC	TA75S558F-TE85R	IC401	1
15	CHIP IC	TC74HC373AF(TP1)	IC402	1
16	CHIP IC	TA78M05F-TE16L	IC403	1
17	IC	TA8201AK	IC404	1
18	IC	PQ12RH11	IC405	1
19	CHIP IC	NJU7662M-T1	IC406	1
20	CHIP IC	BU4S01-TR	IC407	1
21	CHIP TRANSISTOR	DTC114EKA-T146	Q401	1
22	CHIP TRANSISTOR	FMG9A-T148	Q402	1
23	CHIP TRANSISTOR	FMG9A-T148	Q403	1
24	CHIP TRANSISTOR	2SD1766-T100	Q404	1
25	CHIP TRANSISTOR	2SD2351-T106	Q405	1
26	CHIP TRANSISTOR	2SJ503	Q406	1
27	CHIP TRANSISTOR	UMC2-TR	Q407	1
28	CHIP TRANSISTOR	2SA1434-TB	Q408	1
29	CHIP TRANSISTOR	2SA1434-TB	Q409	1
30	CHIP TRANSISTOR	2SA1434-TB	Q410	1
31	CHIP DIODE	1SS355	D405	1
32	CHIP DIODE	1SS355	D406	1
33	CHIP DIODE	1SS355	D407	1
34	CHIP DIODE	1SS355	D408	1
35	CHIP DIODE	1SS355	D409	1
36	CHIP DIODE	1SS355	D414	1
37	CHIP DIODE	DA204U-T106	D411	1
38	CHIP DIODE	DA204U-T106	D412	1
39	CHIP CAPACITOR	GRM40B102K50PT	C401	1
40	CHIP CAPACITOR	GRM42-6B105K16NPT	C402	1
41	CHIP ELECTROLYT	UWT1H010MCR1GB	C403	1
42	CHIP CAPACITOR	GRM40CH101J50PT	C404	1
43	CHIP ELECTROLYT	UWT1C100MCR1GB	C405	1
44	CHIP CAPACITOR	GRM42-6B104K50PT	C406	1
45	CHIP CAPACITOR	GRM40CH271J50PT	C407	1
46	CHIP CAPACITOR	GRM40CH271J50PT	C408	1
47	CHIP ELECTROLYT	UWT1C100MCR1GB	C409	1
48	CHIP CAPACITOR	GRM40B102K50PT	C410	1
49	CHIP CAPACITOR	GRM42-6B104K50PT	C411	1
50	CHIP ELECTROLYT	UWT1C100MCR1GB	C412	1
51	CHIP ELECTROLYT	UWT1C100MCR1GB	C413	1
52	CHIP ELECTROLYT	UWT1C100MCR1GB	C414	1
53	CHIP TANTALUM	ECST1CY105R	C417	1

54	C.ELECTROLYT	KMG35VB-470M	C418	1
55	C.ELECTROLYT	KMG35VB-470M	C419	1
56	C.ELECTROLYT	KMG16VB-1000M	C420	1
57	CHIP CAPACITOR	GRM40B102K50PT	C421	1
58	CHIP CAPACITOR	GRM42-6B105K16NPT	C422	1
59	CHIP ELECTROLYT	UWT1C470MCR1GB	C424	1
60	CHIP ELECTROLYT	UWT1E4R7MCR1GB	C425	1
61	CHIP TANTALUM	ECST1AY106R	C427	1
62	C.ELECTROLYT	KMG16VB-220	C428	1
63	CHIP CAPACITOR	GRM40B104K25PT	C429	1
64	CHIP CAPACITOR	GRM40B104K25PT	C430	1
65	CHIP CAPACITOR	GRM40B104K25PT	C431	1
66	MIC SOCKET	290A-88-30-119	CN401	1
67	CHIP CONNECTOR	00-6200-520-330-000	CN402	1
68	CHIP CONNECTOR	00-6200-516-230-000	CN403	1
69	CHIP CONNECTOR	00-6200-510-130-000	CN404	1
70	CHIP CONNECTOR	00-6200-508-130-000	CN406	1
71	CONNECTOR □	□□B 3P-VH	CN408	1
72	CONNECTOR	SB20-02WS	CN409	1
73	CONNECTOR	FF20-TAMEP1	CP401	1
74	LED	MU16-4101	D401	1
75	LED	MU16-3101	D402	1
76	LED	MU16-2101	D403	1
77	LED	MU16-5101	D404	1
78	FLAT CABLE	4A-S429	FC402	1
79	FLAT CABLE	4A-S471	FC403	1
80	FLAT CABLE	4A-S585	FC405	1
81	FLAT CABLE	4A-S584	FC407	1
82	VR □□□	GF06P 10K	FVR401	1
83	VR □□□	GF06P 100K	FVR402	1
84	CHIP VARICAP	EVM-7JSX30B14	FVR403	1
85	HEADPHONE JACK	S-G8022#01	J401	1
86	LCD	TM12832BBC	LD401	1
87	CHIP RESISTOR	MCR10EZHJ000	R401	1
88	CHIP RESISTOR	MCR10EZHJ153	R405	1
89	CHIP RESISTOR	MCR10EZHJ102	R406	1
90	CHIP RESISTOR	MCR10EZHJ103	R407	1
91	CHIP RESISTOR	MCR10EZHJ273	R408	1
92	CHIP RESISTOR	MCR10EZHJ104	R409	1
93	CHIP RESISTOR	MCR10EZHJ104	R410	1
94	CHIP RESISTOR	MCR10EZHJ473	R411	1
95	CHIP RESISTOR	MCR10EZHJ222	R412	1
96	CHIP RESISTOR	MCR10EZHJ222	R414	1
97	CHIP RESISTOR	MCR10EZHJ560	R415	1
98	CHIP RESISTOR	MCR10EZHJ560	R416	1
99	CHIP RESISTOR	MCR10EZHJ221	R417	1
100	CHIP RESISTOR	MCR10EZHJ330	R418	1
101	CHIP RESISTOR	MCR10EZHJ473	R419	1
102	CHIP RESISTOR	MCR10EZHJ183	R420	1
103	CHIP RESISTOR	MCR10EZHJ822	R421	1
104	CHIP RESISTOR	MCR10EZHJ470	R422	1
105	CHIP RESISTOR	MCR10EZHJ470	R423	1
106	CHIP RESISTOR	MCR10EZHJ223	R424	1
107	CHIP RESISTOR	MCR10EZHJ472	R425	1
108	CHIP RESISTOR	MCR10EZHJ472	R426	1
109	CHIP RESISTOR	MCR10EZHJ181	R427	1

110	CHIP RESISTOR	MCR10EZHJ470	R428	1
111	CHIP RESISTOR	MCR10EZHJ470	R429	1
112	CHIP RESISTOR	MCR10EZHJ472	R430	1
113	CHIP RESISTOR	MCR10EZHJ472	R431	1
114	CHIP RESISTOR	MCR10EZHJ472	R432	1
115	CHIP RESISTOR	MCR10EZHJ472	R433	1
116	CHIP RESISTOR	MCR10EZHJ472	R434	1
117	CHIP RESISTOR	MCR10EZHJ472	R435	1
118	CHIP RESISTOR	MCR10EZHJ472	R436	1
119	CHIP RESISTOR	MCR10EZHJ472	R437	1
120	CHIP RESISTOR	MCR10EZHJ472	R438	1
121	CHIP RESISTOR	MCR10EZHJ103	R439	1
122	CHIP RESISTOR	MCR10EZHJ471	R440	1
123	CHIP RESISTOR	MCR10EZHJ472	R441	1
124	CHIP RESISTOR	MCR10EZHJ103	R442	1
125	CHIP RESISTOR□	MCR18EZHJ4R7	R444	1
126	CHIP RESISTOR □□□	MCR10EZHJ222	R445	1
127	CHIP RESISTOR □□□	MCR10EZHJ563	R446	1
128	CHIP RESISTOR □□□	MCR18EZHJ100	R447	1
129	CHIP RESISTOR □□□	MCR10EZHJ333	R448	1
130	CHIP RESISTOR	MCR10EZHJ103	R449	1
131	CHIP RESISTOR	MCR10EZHJ332	R450	1
132	CHIP RESISTOR	MCR10EZHJ000	R451	1
133	CHIP RESISTOR	MCR10EZHJ822	R452	1
134	CHIP RESISTOR	MCR10EZHJ152	R453	1
135	CHIP RESISTOR	MCR10EZHJ224	R454	1
136	CHIP RESISTOR	MCR10EZHJ103	R455	1
137	CHIP RESISTOR	MCR10EZHJ104	R456	1
138	CHIP RESISTOR	MCR10EZHJ104	R457	1
139	CHIP RESISTOR	MCR10EZHJ103	R458	1
140	CHIP THERMISTER	TN10-4C103KT	TH401	1
141	COLLAR	4A10-3045		8
142	CORE	BP53RD030310120M		1
143	P.C.B.	51FR087-3□1/2□		1
144	SCREW SEMS	SE-3 X 10		6
145	SPACER	4A10-3004		3
146	TR PLATE	4A10-3079		1

MODEL	KG510 VHF	CODE : KG510-20B50K	UNIT : 510CONTROL UNIT	
NO.	PARTS NAME	DESCRIPTION	CIRCUIT REFERENCE	
147	FRONT PANEL	2A10-0213		1
148	BUTTON	4A10-2985		1
149	WINDOW	4A10-2987		1
150	KNOB	4A10-2989		2
151	SP GRILL	4A10-3001		1
152	SP SPACER	4A10-3026		1
153	TAPE FOR WINDOW	4A10-3047		1
154	CONNECTOR □□	□4A-S499		1
155	SPEAKER	KS-110		1
156	SCREW PAN TP	PN-3 X 8 TP		4

MODEL	KG510 VHF	CODE : KG510-20B50K	UNIT : 510TX MAIN UNIT	
NO.	PARTS NAME	DESCRIPTION	CIRCUIT REFERENCE	
157	CHIP IC	AN78L05M	IC201	1
158	CHIP IC	TA78M05F-TE16L	IC202	1
159	CHIP IC	TS272CD	IC203	1
160	CHIP IC	TA75S01F-TE85R	IC204	1
161	CHIP IC	MBM1511PFV-G-BND-EF	IC205	1
162	CHIP IC	NJU7662M-T1	IC206	1

163	CHIP IC	BU4S66-TR	IC207	1
164	CHIP IC	M5237ML-600C	IC208	1
165	CHIP IC	NJM2904M-T1	IC209	1
166	CHIP COIL	FBMH3216HM501NT	BL201	1
167	CHIP COIL	FBMH3216HM501NT	BL202	1
168	CHIP COIL	BLM21B421SPT	BL203	1
169	CHIP COIL	BLM21B421SPT	BL204	1
170	CHIP COIL	BLM21B421SPT	BL205	1
171	CHIP COIL	FBMH3216HM501NT	BL206	1
172	CHIP COIL	BLM21B421SPT	BL207	1
173	CHIP ELECTROLYT	UWT1C100MCR1GB	C201	1
174	CHIP TANTALUM	ECST1AY475R	C202	1
175	CHIP TANTALUM	ECST1CY105R	C203	1
176	CHIP CAPACITOR	GRM40CH101J50PT	C204	1
177	CHIP CAPACITOR	GRM42-6B105K16NPT	C205	1
178	CHIP CAPACITOR	GRM40CH470J50PT	C207	1
179	CHIP TANTALUM	ECST1VY224R	C208	1
180	CHIP CAPACITOR	GRM42-6B105K16NPT	C209	1
181	CHIP CAPACITOR	GRM40B102K50PT	C210	1
182	CHIP CAPACITOR	GRM40B473K25PT	C211	1
183	CHIP ELECTROLYT	UWT1C100MCR1GB	C212	1
184	CHIP ELECTROLYT	UWT1C100MCR1GB	C213	1
185	CHIP CAPACITOR	GRM40B473K25PT	C214	1
186	CHIP CAPACITOR	GRM40CH151J50PT	C215	1
187	CHIP CAPACITOR	GRM40CH100D50PT	C217	1
188	CHIP CAPACITOR	GRM40B153K50PT	C218	1
189	CHIP TANTALUM	ECST1CY225R	C219	1
190	CHIP CAPACITOR	GRM40B153K50PT	C220	1
191	CHIP ELECTROLYT	UWT1C100MCR1GB	C221	1
192	CHIP ELECTROLYT	UWT1C100MCR1GB	C222	1
193	CHIP ELECTROLYT	UWT1C100MCR1GB	C223	1
194	CHIP ELECTROLYT	UWT1C100MCR1GB	C224	1
195	CHIP ELECTROLYT	UWT1C100MCR1GB	C225	1
196	CHIP CAPACITOR	GRM40B104K25PT	C226	1
197	CHIP CAPACITOR	GRM40B473K25PT	C227	1
198	CHIP TANTALUM	ECST1CY105R	C228	1
199	CHIP TANTALUM	ECST1VY154R	C230	1
200	CHIP CAPACITOR	GRM40B102K50PT	C231	1
201	CHIP CAPACITOR	GRM40B103K50PT	C232	1
202	CHIP CAPACITOR	GRM40B102K50PT	C233	1
203	CHIP CAPACITOR	GRM40B473K25PT	C234	1
204	CHIP CAPACITOR	GRM40B103K50PT	C235	1
205	CHIP CAPACITOR	GRM40B471K50PT	C236	1
206	CHIP CAPACITOR	GRM40B102K50PT	C237	1
207	CHIP CAPACITOR	GRM40B102K50PT	C238	1
208	CHIP ELECTROLYT	UWT1E330MCR1GB	C239	1
209	CHIP CAPACITOR	GRM40CH150J50PT	C240	1
210	CHIP CAPACITOR	GRM40B102K50PT	C241	1
211	CHIP CAPACITOR	GRM40B102K50PT	C243	1
212	CHIP CAPACITOR	GRM40CH120J50PT	C244	1
213	CHIP CAPACITOR	GRM40CH330J50PT	C248	1
214	CHIP CAPACITOR	GRM40CH040C50PT	C249	1
215	CHIP CAPACITOR	GRM40CH100D50PT	C252	1
216	CHIP CAPACITOR	GRM40B471K50PT	C253	1

217	CHIP CAPACITOR	GRM40B102K50PT	C254	1
218	CHIP CAPACITOR	GRM40B103K50PT	C255	1
219	CHIP CAPACITOR	GRM40B223K25PT	C256	1
220	CHIP TANTALUM	ECST1CY105R	C257	1
221	CORD	4A-S586	CN201	1
222	CONNECTOR	52030-1610	CN202	1
223	CONNECTOR	LPC-6FDS	CS201	1
224	CONNECTOR	LPC-2FDS	CS202	1
225	CHIP ZENNER DIODE	UDZ2.4B-TE17	D201	1
226	CHIP DIODE	1SS355	D202	1
227	CHIP DIODE	1SS355	D205	1
228	CHIP DIODE	DA204U-T106	D206	1
229	CHIP DIODE	DA204U-T106	D207	1
230	CHIP DIODE	1SS355	D210	1
231	CHIP DIODE	RB501V-40TE-17	D211	1
232	CHIP DIODE	1SS356-TW11	D212	1
233	CHIP DIODE	SML210-VT-T86	D214	1
234	CHIP VR	G3AT 10K	FVR201	1
235	CHIP VARICAP	EVM-7JSX30B25	FVR202	1
236	CHIP VARICAP	EVM-7JSX30B15	FVR203	1
237	CHIP VR	G3AT 5K	FVR204	1
238	CHIP COIL	#1091(R12-H510Y)	L201	1
239	CHIP INDUCTOR	LQN1A33NJ04	L203	1
240	TCXO(VHF)	VT50P-14	OS201	1
241	SCREW SEMS	SE-3 X 6	PCB	12
242	CHIP TRANSISTOR	2SK2731-T146	Q201	1
243	CHIP TRANSISTOR	FMG9A-T148	Q202	1
244	CHIP TRANSISTOR	UMC2-TR	Q203	1
245	CHIP TRANSISTOR	2SK3018-T106	Q204	1
246	CHIP TRANSISTOR	2SD2351-T106	Q205	1
247	CHIP TRANSISTOR	2SK3018-T106	Q206	1
248	CHIP TRANSISTOR	2SJ-166-T1B	Q207	1
249	CHIP TRANSISTOR	2SK3018-T106	Q208	1
250	CHIP TRANSISTOR	UMC2-TR	Q209	1
251	CHIP TRANSISTOR	FMG2A-T148	Q210	1
252	CHIP TRANSISTOR	FMG2A-T148	Q211	1
253	CHIP TRANSISTOR	2SB1184TL	Q212	1
254	CHIP TRANSISTOR	IMX1-T110	Q214	1
255	CHIP TRANSISTOR	2SC2954-T1	Q215	1
256	CHIP RESISTOR	MCR10EZHJ103	R201	1
257	CHIP RESISTOR	MCR10EZHJ103	R202	1
258	CHIP RESISTOR	MCR10EZHJ103	R203	1
259	CHIP RESISTOR	MCR10EZHJ683	R204	1
260	CHIP RESISTOR	MCR10EZHJ153	R205	1
261	CHIP RESISTOR	MCR10EZHJ472	R206	1
262	CHIP RESISTOR	MCR10EZHJ103	R207	1
263	CHIP RESISTOR	MCR10EZHJ104	R209	1
264	CHIP RESISTOR	MCR10EZHJ104	R210	1
265	CHIP RESISTOR	MCR10EZHJ184	R211	1
266	CHIP RESISTOR	MCR10EZHJ153	R212	1
267	CHIP RESISTOR	MCR10EZHJ682	R213	1
268	CHIP RESISTOR	MCR10EZHJ682	R214	1
269	CHIP RESISTOR	MCR10EZHJ103	R215	1

270	CHIP RESISTOR	MCR10EZHJ103	R216	1
271	CHIP RESISTOR	MCR10EZHJ103	R217	1
272	CHIP RESISTOR	MCR10EZHJ103	R219	1
273	CHIP RESISTOR	MCR10EZHJ104	R221	1
274	CHIP RESISTOR	MCR10EZHJ101	R222	1
275	CHIP RESISTOR	MCR10EZHJ472	R223	1
276	CHIP RESISTOR	MCR10EZHJ103	R224	1
277	CHIP RESISTOR	MCR10EZHJ102	R225	1
278	CHIP RESISTOR	MCR10EZHJ103	R226	1
279	CHIP RESISTOR	MCR10EZHJ273	R227	1
280	CHIP RESISTOR	MCR10EZHJ183	R228	1
281	CHIP RESISTOR	MCR10EZHJ470	R229	1
282	CHIP RESISTOR	MCR10EZHJ470	R230	1
283	CHIP RESISTOR	MCR10EZHJ393	R231	1
284	CHIP RESISTOR	MCR10EZHJ102	R232	1
285	CHIP RESISTOR	MCR10EZHJ821	R233	1
286	CHIP RESISTOR	MCR10EZHJ272	R234	1
287	CHIP RESISTOR	MCR10EZHJ473	R236	1
288	CHIP RESISTOR	MCR10EZHJ152	R237	1
289	CHIP RESISTOR	MCR10EZHJ271	R239	1
290	CHIP RESISTOR	MCR18EZHJ471	R240	1
291	CHIP RESISTOR	MCR10EZHJ103	R241	1
292	CHIP RESISTOR	MCR10EZHJ103	R243	1
293	CHIP RESISTOR	MCR10EZHJ473	R244	1
294	CHIP RESISTOR	MCR10EZHJ153	R246	1
295	CHIP RESISTOR	MCR10EZHJ104	R247	1
296	CHIP RESISTOR	MCR10EZHJ000	R248	1
297	CHIP RESISTOR	MCR10EZHJ473	R249	1
298	CHIP RESISTOR	MCR10EZHJ184	R250	1
299	CHIP RESISTOR	MCR10EZHJ152	R251	1
300	CHIP RESISTOR	MCR10EZHJ471	R252	1
301	CHIP RESISTOR	MCR10EZHJ104	R253	1
302	CHIP RESISTOR	MCR10EZHJ473	R254	1
303	CHIP RESISTOR	MCR10EZHJ473	R255	1
304	CHIP RESISTOR	MCR10EZHJ104	R256	1
305	CHIP RESISTOR	MCR10EZHJ473	R257	1
306	CHIP RESISTOR	MCR10EZHJ154	R259	1
307	CHIP RESISTOR	MCR10EZHJ822	R260	1
308	CHIP RESISTOR	MCR10EZHJ103	R261	1
309	CHIP RESISTOR	MCR10EZHJ103	R262	1
310	CHIP RESISTOR	MCR10EZHJ393	R263	1
311	CHIP RESISTOR	MCR10EZHJ100	R264	1
312	CHIP RESISTOR	MCR10EZHJ271	R265	1
313	CHIP RESISTOR	MCR10EZHJ151	R266	1
314	CHIP RESISTOR	MCR10EZHJ4R7	R267	1
315	CHIP RESISTOR	MCR10EZHJ472	R268	1
316	CHIP RESISTOR	MCR10EZHJ4R7	R269	1
317	CHIP RESISTOR	MCR10EZHJ471	R270	1
318	CHIP RESISTOR	MCR18EZHJ100	R271	1
319	CHIP RESISTOR	MCR18EZHJ000	R272	1
320	CHIP RESISTOR	MCR10EZHJ2R2	R274	1
321	CHIP RESISTOR	MCR10EZHJ103	R277	1
322	CHIP RESISTOR	MCR10EZHJ182	R278	1

323	CHIP RESISTOR	MCR18EZHJ471	R279	1
324	CHIP RESISTOR	MCR10EZHJ182	R280	1
325	BOSS	4A10-3000		2
326	P.C.B.	51TXU86-4□1/2□		1
327	SPRING-108	4A10-2200		2
328	TX COVER	4A10-3037		1
329	TX SEAL	4A10-3039		1
330	TX/RX FRAME	2A10-0210		1

MODEL	KG510 VHF	CODE : KG510-20B50K	UNIT : 510TX VCO UNIT	
NO.	PARTS NAME	DESCRIPTION	CIRCUIT REFERENCE	
331	CHIP IC	UPC1688G-T1	IC301	1
332	CHIP COIL	FBMH3216HM501NT	BL301	1
333	CHIP COIL	BLM21B421SPT	BL302	1
334	CHIP CAPACITOR	GRM40B823K25PT	C302	1
335	CHIP CAPACITOR	GRM40CH150J50PT	C303	1
336	CHIP CAPACITOR	GRM40CH221J50PT	C305	1
337	CHIP CAPACITOR	GRM39CK0R75B50PT	C306	1
338	CHIP CAPACITOR	GRM40CH110J50PT	C307	1
339	CHIP CAPACITOR	GRM40CH150J50PT	C308	1
340	CHIP CAPACITOR	GRM40CH060D50PT	C309	1
341	CHIP CAPACITOR	GRM40CH050D50PT	C310	1
342	CHIP CAPACITOR	GRM40CK020C50PT	C311	1
343	CHIP CAPACITOR	GRM40B102K50PT	C312	1
344	CHIP CAPACITOR	GRM40B102K50PT	C313	1
345	CHIP CAPACITOR	GRM40CH150J50PT	C314	1
346	CHIP CAPACITOR	GRM40CJ030J50PT	C315	1
347	CHIP CAPACITOR	GRM40CH100D50PT	C316	1
348	CHIP CAPACITOR	GRM40B102K50PT	C317	1
349	CHIP ELECTROLYT	UWT1C100MCR1GB	C318	1
350	CHIP ELECTROLYT	UWT1C100MCR1GB	C319	1
351	CHIP CAPACITOR	GRM40B102K50PT	C320	1
352	CHIP CAPACITOR	GRM40CH220J50PT	C321	1
353	CHIP CAPACITOR	GRM40B471K50PT	C322	1
354	CHIP CAPACITOR	GRM40B102K50PT	C323	1
355	CHIP ELECTROLYT	UWT1C100MCR1GB	C324	1
356	CHIP CAPACITOR	GRM40B102K50PT	C325	1
357	CHIP CAPACITOR	GRM40B471K50PT	C326	1
358	CONNECTOR	LPC-6T7M	CP301	1
359	CONNECTOR	LPC-2T7M	CP302	1
360	CHIP DIODE	1SV229-TPH3	D301	1
361	CHIP DIODE	1SV231-TPH3	D303	1
362	CHIP DIODE	1SV231-TPH3	D304	1
363	CHIP DIODE	1SS355	D307	1
364	CHIP DIODE	1SS356-TW11	D308	1
365	CHIP ZENNER DIODE	UDZ2.0B-TE17	D309	1
366	CHIP ZENNER DIODE	UDZ2.0B-TE17	D310	1
367	CHIP INDUCTOR	ELJ-FC1R0MF	L301	1
368	CHIP COIL	KQ1008TE1R0J	L302	1
369	CHIP COIL	#3074	L303	1
370	CHIP COIL	KQ1008TE1R0J	L304	1
371	CHIP INDUCTOR	ELJ-FC1R0MF	L305	1
372	CHIP COIL	LL2012-F68NK	L306	1
373	CHIP RESISTOR	MCR10EZHJ150	L307	1
374	CHIP COIL	#1092(R12-H693Y)	L308	1
375	CHIP FET	2SK508-T1B-K53	Q301	1

376	CHIP TRANSISTOR	2SC4250-TE85R	Q302	1
377	CHIP TRANSISTOR	2SC3583-T1B-R34	Q303	1
378	CHIP TRANSISTOR	DTA124EKA-T107	Q304	1
379	CHIP TRANSISTOR	2SD2351-T106	Q305	1
380	CHIP TRANSISTOR	DTA124EKA-T107	Q306	1
381	CHIP RESISTOR	MCR10EZHJ473	R301	1
382	CHIP RESISTOR	MCR10EZHJ104	R303	1
383	CHIP RESISTOR	MCR10EZHJ150	R306	1
384	CHIP RESISTOR	MCR10EZHJ221	R307	1
385	CHIP RESISTOR	MCR10EZHJ472	R308	1
386	CHIP RESISTOR	MCR10EZHJ472	R309	1
387	CHIP RESISTOR	MCR10EZHJ471	R310	1
388	CHIP RESISTOR	MCR10EZHJ471	R311	1
389	CHIP RESISTOR	MCR10EZHJ101	R312	1
390	CHIP RESISTOR	MCR10EZHJ103	R313	1
391	CHIP RESISTOR	MCR10EZHJ222	R314	1
392	CHIP RESISTOR	MCR10EZHJ472	R315	1
393	CHIP RESISTOR	MCR10EZHJ332	R316	1
394	CHIP RESISTOR	MCR10EZHJ102	R317	1
395	CHIP RESISTOR	MCR10EZHJ560	R318	1
396	CHIP RESISTOR	MCR10EZHJ4R7	R319	1
397	CHIP RESISTOR	MCR10EZHJ821	R320	1
398	CHIP RESISTOR	MCR10EZHJ150	R321	1
399	CHIP CAPACITOR	GRM40B102K50PT	R322	1
400	CHIP RESISTOR	MCR10EZHJ101	R323	1
401	CHIP RESISTOR	MCR10EZHJ473	R324	1
402	CHIP RESISTOR	MCR10EZHJ154	R325	1
403	CHIP CHECKER	RCT	TP301	1
404	P.C.B.	51VCU86-1□1/4□		1
405	VCO COVER	4A10-2170		1
406	VCO COVER	4A10-3029		1
407	VCO SHIELD CASE-108	4A10-2169		1

MODEL	KG510 VHF	CODE : KG510-20B50K	UNIT : 510RX MAIN UNIT	
NO.	PARTS NAME	DESCRIPTION	CIRCUIT REFERENCE	
408	CHIP IC	MBM1511PFV-G-BND-EF	IC101	1
409	CHIP IC	NJU7662M-T1	IC102	1
410	CHIP IC	BU4S66-TR	IC103	1
411	CHIP IC	AN78L05M	IC104	1
412	CHIP IC	TA75S01F-TE85R	IC105	1
413	CHIP IC	TA75S558F-TE85R	IC107	1
414	CHIP IC	TA78M05F-TE16L	IC108	1
415	CHIP COIL	FBMH3216HM501NT	BL101	1
416	CHIP COIL	BLM21B421SPT	BL102	1
417	CHIP COIL	BLM21B421SPT	BL103	1
418	CHIP COIL	FBMH3216HM501NT	BL104	1
419	BPF COIL	#3100	BPF101	1
420	BPF COIL	#3100	BPF102	1
421	BPF BOTTOM	3A10-0576	BPF	2
422	BPF SPRING	4A10-3041	BPF	2
423	SCREW BIND	BD-2 X 6	BPF	4
424	CHIP CAPACITOR	GRM40CH070D50PT	C101	1
425	CHIP CAPACITOR	GRM40CH070D50PT	C103	1
426	CHIP CAPACITOR	GRM40B471K50PT	C104	1
427	CHIP CAPACITOR	GRM40B102K50PT	C106	1

428	CHIP CAPACITOR	GRM40B472K50PT	C107	1
429	CHIP CAPACITOR	GRM40B102K50PT	C108	1
430	CHIP CAPACITOR	GRM40B102K50PT	C109	1
431	CHIP CAPACITOR	GRM40CH101J50PT	C110	1
432	CHIP CAPACITOR	GRM40B471K50PT	C111	1
433	CHIP CAPACITOR	GRM40B102K50PT	C112	1
434	CHIP CAPACITOR	GRM40B102K50PT	C115	1
435	CHIP CAPACITOR	GRM40B472K50PT	C116	1
436	CHIP CAPACITOR	GRM40B102K50PT	C117	1
437	CHIP CAPACITOR	GRM40B102K50PT	C118	1
438	CHIP CAPACITOR	GRM40CH101J50PT	C119	1
439	CHIP CAPACITOR	GRM40B471K50PT	C120	1
440	CHIP CAPACITOR	GRM40B102K50PT	C121	1
441	CHIP CAPACITOR	GRM40CK1R5J50PT	C124	1
442	CHIP CAPACITOR	GRM40CH101J50PT	C125	1
443	CHIP CAPACITOR	GRM40CH220J50PT	C126	1
444	CHIP CAPACITOR	GRM40CH200J50PT	C127	1
445	CHIP CAPACITOR	GRM40B102K50PT	C128	1
446	CHIP CAPACITOR	GRM40B102K50PT	C129	1
447	CHIP CAPACITOR	GRM40CH330J50PT	C130	1
448	CHIP TANTALUM	ECST1CY105R	C131	1
449	CHIP CAPACITOR	GRM40CH070D50PT	C132	1
450	CHIP CAPACITOR	GRM40B102K50PT	C133	1
451	CHIP CAPACITOR	GRM40B473K25PT	C134	1
452	CHIP CAPACITOR	GRM40CH040C50PT	C135	1
453	CHIP CAPACITOR	GRM40B473K25PT	C137	1
454	CHIP TANTALUM	ECST1AY475R	C138	1
455	CHIP ELECTROLYT	UWT1C100MCR1GB	C139	1
456	CHIP CAPACITOR	GRM40B473K25PT	C140	1
457	CHIP TANTALUM	ECST1VY224R	C141	1
458	CHIP CAPACITOR	GRM40CH151J50PT	C142	1
459	CHIP CAPACITOR	GRM40CH070D50PT	C143	1
460	CHIP ELECTROLYT	UWT1C100MCR1GB	C145	1
461	CHIP ELECTROLYT	UWT1C100MCR1GB	C146	1
462	CHIP ELECTROLYT	UWT1C100MCR1GB	C147	1
463	CHIP ELECTROLYT	UWT1C100MCR1GB	C148	1
464	CHIP ELECTROLYT	UWT1C100MCR1GB	C149	1
465	CHIP CAPACITOR	GRM40B153K50PT	C150	1
466	CHIP TANTALUM	ECST1CY105R	C151	1
467	CHIP CAPACITOR	GRM40B473K25PT	C152	1
468	CHIP CAPACITOR	GRM40B104K25PT	C153	1
469	CHIP TANTALUM	ECST1CY105R	C155	1
470	CHIP ELECTROLYT	UWT1C100MCR1GB	C156	1
471	CHIP TANTALUM	ECST1CY225R	C157	1
472	CHIP CAPACITOR	GRM40B153K50PT	C166	1
473	CHIP CAPACITOR	GRM40B153K50PT	C187	1
474	CHIP CAPACITOR	GRM40B103K50PT	C188	1
475	CHIP CAPACITOR	GRM40B222K50PT	C189	1
476	CORD	4A-S587	CN101	1
477	CONNECTOR	52030-1610	CN202	1
478	CONNECTOR	LPC-6FDS	CS101	1
479	CONNECTOR	LPC-2FDS	CS102	1
480	CONNECTOR	LPC-2FDS	CS103	1

481	CONNECTOR	LPC-6FDS	CS104	1
482	CHIP DIODE	HVU131TRF	D101	1
483	CHIP DIODE	HVU131TRF	D102	1
484	CHIP DIODE	HVU131TRF	D103	1
485	CHIP DIODE	1SS271-TE85R	D107	1
486	CHIP DIODE	1SS271-TE85R	D108	1
487	CHIP DIODE	RB501V-40TE-17	D109	1
488	CHIP DIODE	1SS355	D110	1
489	CHIP DIODE	1SS355	D111	1
490	CHIP DIODE	DA204U-T106	D112	1
491	CHIP DIODE	DA204U-T106	D113	1
492	CHIP DIODE	1SS355	D114	1
493	CHIP ZENNER DIODE	UDZ2.4B-TE17	D118	1
494	CHIP DIODE	SML210-VT-T86	D119	1
495	SPRING-108	4A10-2200	GNB	3
496	JUMPER PLUG	DIC-149-3P	J101	1
497	JUMPER SOCKET	DIC-128	JS	1
498	CHIP INDUCTOR	LQN1A33NJ04	L101	1
499	CHIP COIL	LL2012-F47NK	L102	1
500	CHIP INDUCTOR	KQ1008TER33	L103	1
501	CHIP COIL	HK2125R10J	L104	1
502	CHIP INDUCTOR	ELJ-NCR33KF	L106	1
503	CHIP COIL	HK2125R10J	L107	1
504	CHIP RESISTOR	MCR10EZHJ100	L108	1
505	CHIP INDUCTOR	LQN1AR10J04	L109	1
506	CHIP INDUCTOR	NL322522TR56J	L110	1
507	CHIP INDUCTOR	ELJ-FC4R7KF	L111	1
508	CHIP INDUCTOR	NL322522TR68J	L112	1
509	CHIP RESISTOR	MCR10EZHJ000	L113	1
510	CHIP INDUCTOR	ELJ-FC1R0MF	L114	1
511	TCXO(VHF)	VT50P-14	OS101	1
512	SCREW SEMS	SE-3 X 6	PCB	12
513	CHIP TRANSISTOR	3SK177-T1-U72	Q101	1
514	CHIP FET	2SK508-T1B-K53	Q103	1
515	CHIP TRANSISTOR	DTB143EK-T146	Q104	1
516	CHIP TRANSISTOR	2SD2351-T106	Q107	1
517	CHIP TRANSISTOR	2SJ-166-T1B	Q108	1
518	CHIP TRANSISTOR	2SK3018-T106	Q109	1
519	CHIP TRANSISTOR	2SK3018-T106	Q110	1
520	CHIP TRANSISTOR	UMC2-TR	Q111	1
521	CHIP TRANSISTOR	UMC2-TR	Q112	1
522	CHIP TRANSISTOR	DTA144EUA-T106	Q117	1
523	CHIP TRANSISTOR	DTB143EK-T146	Q118	1
524	CHIP TRANSISTOR	DTC114EKA-T146	Q119	1
525	CHIP TRANSISTOR	2SK3018-T106	Q120	1
526	CHIP RESISTOR	MCR10EZHJ103	R101	1
527	CHIP RESISTOR	MCR10EZHJ821	R102	1
528	CHIP RESISTOR	MCR10EZHJ562	R103	1
529	CHIP RESISTOR	MCR10EZHJ103	R104	1
530	CHIP RESISTOR	MCR10EZHJ223	R105	1
531	CHIP RESISTOR	MCR10EZHJ121	R106	1
532	CHIP RESISTOR	MCR10EZHJ332	R107	1
533	CHIP RESISTOR	MCR10EZHJ470	R108	1

534	CHIP RESISTOR	MCR10EZHJ000	R110	1
535	CHIP RESISTOR	MCR10EZHJ821	R111	1
536	CHIP RESISTOR	MCR10EZHJ562	R112	1
537	CHIP RESISTOR	MCR10EZHJ103	R113	1
538	CHIP RESISTOR	MCR10EZHJ223	R114	1
539	CHIP RESISTOR	MCR10EZHJ121	R115	1
540	CHIP RESISTOR	MCR10EZHJ332	R116	1
541	CHIP RESISTOR	MCR10EZHJ470	R117	1
542	CHIP RESISTOR	MCR10EZHJ821	R118	1
543	CHIP RESISTOR	MCR10EZHJ151	R119	1
544	CHIP RESISTOR	MCR10EZHJ101	R120	1
545	CHIP RESISTOR	MCR10EZHJ560	R121	1
546	CHIP RESISTOR	MCR10EZHJ103	R122	1
547	CHIP RESISTOR	MCR10EZHJ101	R123	1
548	CHIP RESISTOR	MCR10EZHJ822	R124	1
549	CHIP RESISTOR	MCR10EZHJ104	R125	1
550	CHIP RESISTOR	MCR10EZHJ393	R126	1
551	CHIP RESISTOR	MCR10EZHJ104	R127	1
552	CHIP RESISTOR	MCR10EZHJ682	R128	1
553	CHIP RESISTOR	MCR10EZHJ473	R129	1
554	CHIP RESISTOR	MCR10EZHJ104	R130	1
555	CHIP RESISTOR	MCR10EZHJ470	R131	1
556	CHIP RESISTOR	MCR10EZHJ103	R132	1
557	CHIP RESISTOR	MCR10EZHJ103	R133	1
558	CHIP RESISTOR	MCR10EZHJ103	R134	1
559	CHIP RESISTOR	MCR10EZHJ470	R135	1
560	CHIP RESISTOR	MCR10EZHJ392	R136	1
561	CHIP RESISTOR	MCR10EZHJ103	R137	1
562	CHIP RESISTOR	MCR10EZHJ103	R138	1
563	CHIP RESISTOR	MCR10EZHJ103	R139	1
564	CHIP RESISTOR	MCR10EZHJ472	R140	1
565	CHIP RESISTOR	MCR10EZHJ472	R141	1
566	CHIP RESISTOR	MCR10EZHJ273	R144	1
567	CHIP RESISTOR	MCR10EZHJ183	R145	1
568	CHIP RESISTOR	MCR10EZHJ472	R146	1
569	CHIP RESISTOR	MCR10EZHJ101	R148	1
570	CHIP RESISTOR	MCR10EZHJ104	R149	1
571	CHIP RESISTOR	MCR10EZHJ470	R150	1
572	CHIP RESISTOR	MCR10EZHJ470	R151	1
573	CHIP RESISTOR	MCR10EZHJ393	R152	1
574	CHIP RESISTOR	MCR10EZHJ102	R153	1
575	CHIP RESISTOR	MCR10EZHJ102	R154	1
576	CHIP RESISTOR	MCR10EZHJ272	R155	1
577	CHIP RESISTOR	MCR10EZHJ473	R157	1
578	CHIP RESISTOR	MCR10EZHJ471	R158	1
579	CHIP RESISTOR	MCR10EZHJ104	R183	1
580	CHIP RESISTOR	MCR10EZHJ103	R184	1
581	CHIP RESISTOR	MCR10EZHJ473	R185	1
582	CHIP RESISTOR	MCR10EZHJ472	R186	1
583	CHIP RESISTOR	MCR10EZHJ103	R187	1
584	CHIP RESISTOR	MCR10EZHJ104	R188	1
585	CHIP RESISTOR	MCR10EZHJ332	R189	1
586	CHIP COIL	#3060	T101	1
587	CHIP COIL	#3060	T102	1

588	COIL	M7-T1(31302)	T103	1
589	CRYSTAL FILTER	48S15A	XF101	1
590	BOSS	4A10-3000		2
591	MIX SHIELD CASE-1	4A10-2171		1
592	P.C.B.	51VCU86-1□1/4□		1
593	RX COVER	4A10-2994		1
594	RX SEAL	4A10-3040		1
595	TX/RX FRAME	2A10-0210		1

MODEL	KG510 VHF	CODE : KG510-20B50K	UNIT : 510RX VCO UNIT	
NO.	PARTS NAME	DESCRIPTION	CIRCUIT REFERENCE	
596	CHIP IC	UPC1688G-T1	IC301	1
597	CHIP COIL	FBMH3216HM501NT	BL301	1
598	CHIP COIL	BLM21B421SPT	BL302	1
599	CHIP CAPACITOR	GRM40B823K25PT	C302	1
600	CHIP CAPACITOR	GRM40CH110J50PT	C303	1
601	CHIP CAPACITOR	GRM40CH101J50PT	C305	1
602	CHIP CAPACITOR	GRM40CH040D50PT	C307	1
603	CHIP CAPACITOR	GRM40CH100J50PT	C308	1
604	CHIP CAPACITOR	GRM40CH050C50PT	C309	1
605	CHIP CAPACITOR	GRM40CH050C50PT	C310	1
606	CHIP CAPACITOR	GRM40CK010B50PT	C311	1
607	CHIP CAPACITOR	GRM40B102K50PT	C312	1
608	CHIP CAPACITOR	GRM40B102K50PT	C313	1
609	CHIP CAPACITOR	GRM40CH150J50PT	C314	1
610	CHIP CAPACITOR	GRM40CJ030J50PT	C315	1
611	CHIP CAPACITOR	GRM40CH100D50PT	C316	1
612	CHIP CAPACITOR	GRM40B102K50PT	C317	1
613	CHIP ELECTROLYT	UWT1C100MCR1GB	C318	1
614	CHIP ELECTROLYT	UWT1C100MCR1GB	C319	1
615	CHIP CAPACITOR	GRM40B102K50PT	C320	1
616	CHIP CAPACITOR	GRM40CH220J50PT	C321	1
617	CHIP CAPACITOR	GRM40B471K50PT	C322	1
618	CHIP CAPACITOR	GRM40B102K50PT	C323	1
619	CHIP ELECTROLYT	UWT1C100MCR1GB	C324	1
620	CHIP CAPACITOR	GRM40B102K50PT	C325	1
621	CHIP CAPACITOR	GRM40B471K50PT	C326	1
622	CONNECTOR	LPC-6T7M	CP301	1
623	CONNECTOR	LPC-2T7M	CP302	1
624	CHIP DIODE	1SV231-TPH3	D303	1
625	CHIP DIODE	1SV231-TPH3	D304	1
626	CHIP DIODE	1SS355	D307	1
627	CHIP DIODE	1SS356-TW11	D308	1
628	CHIP ZENNER DIODE	UDZ2.0B-TE17	D309	1
629	CHIP ZENNER DIODE	UDZ2.0B-TE17	D310	1
630	CHIP INDUCTOR	ELJ-FC1R0MF	L301	1
631	CHIP COIL	KQ1008TER82J	L302	1
632	CHIP COIL	#3074	L303	1
633	CHIP COIL	KQ1008TER82J	L304	1
634	CHIP INDUCTOR	ELJ-FC1R0MF	L305	1
635	CHIP COIL	LL2012-F33NK	L306	1
636	CHIP RESISTOR	MCR10EZHJ100	L307	1
637	CHIP COIL	#1092(R12-H693Y)	L308	1
638	CHIP FET	2SK508-T1B-K53	Q301	1
639	CHIP TRANSISTOR	2SC4250-TE85R	Q302	1

640	CHIP TRANSISTOR	2SC3583-T1B-R34	Q303	1
641	CHIP TRANSISTOR	DTA124EKA-T107	Q304	1
642	CHIP TRANSISTOR	2SD2351-T106	Q305	1
643	CHIP TRANSISTOR	DTA124EKA-T107	Q306	1
644	CHIP RESISTOR	MCR10EZHJ150	R306	1
645	CHIP RESISTOR	MCR10EZHJ221	R307	1
646	CHIP RESISTOR	MCR10EZHJ472	R308	1
647	CHIP RESISTOR	MCR10EZHJ472	R309	1
648	CHIP RESISTOR	MCR10EZHJ471	R310	1
649	CHIP RESISTOR	MCR10EZHJ471	R311	1
650	CHIP RESISTOR	MCR10EZHJ101	R312	1
651	CHIP RESISTOR	MCR10EZHJ222	R314	1
652	CHIP RESISTOR	MCR10EZHJ472	R315	1
653	CHIP RESISTOR	MCR10EZHJ332	R316	1
654	CHIP RESISTOR	MCR10EZHJ102	R317	1
655	CHIP RESISTOR	MCR10EZHJ470	R318	1
656	CHIP RESISTOR	MCR10EZHJ4R7	R319	1
657	CHIP RESISTOR	MCR10EZHJ821	R320	1
658	CHIP RESISTOR	MCR10EZHJ150	R321	1
659	CHIP RESISTOR	MCR10EZHJ103	R322	1
660	CHIP RESISTOR	MCR10EZHJ101	R323	1
661	CHIP CHECKER	RCT	TP301	1
662	P.C.B.	51VCU86-1□1/4□		1
663	VCO COVER	4A10-2170		1
664	VCO COVER	4A10-3029		1
665	VCO SHIELD CASE-108	4A10-2169		1

MODEL	KG510 VHF	CODE : KG510-20B50K	UNIT : 510IF UNIT
NO.	PARTS NAME	DESCRIPTION	CIRCUIT REFERENCE
666	CHIP IC	TK10487M-TR	IC106	1
667	CHIP CAPACITOR	GRM40CK010B50PT	C158	1
668	CHIP CAPACITOR	GRM40CK010B50PT	C159	1
669	CHIP CAPACITOR	GRM40CH040C50PT	C160	1
670	CHIP CAPACITOR	GRM40CH120J50PT	C161	1
671	CHIP CAPACITOR	GRM40CH220J50PT	C162	1
672	CHIP CAPACITOR	GRM40B222K50PT	C163	1
673	CHIP CAPACITOR	GRM40B102K50PT	C164	1
674	CHIP CAPACITOR	GRM40B102K50PT	C165	1
675	CHIP CAPACITOR	GRM40B153K50PT	C167	1
676	CHIP CAPACITOR	GRM40B102K50PT	C168	1
677	CHIP CAPACITOR	GRM40CH220J50PT	C169	1
678	CHIP CAPACITOR	GRM40B222K50PT	C170	1
679	CHIP CAPACITOR	GRM40CH470J50PT	C171	1
680	CHIP CAPACITOR	GRM40B471K50PT	C172	1
681	CHIP CAPACITOR	GRM40CH331J50PT	C173	1
682	CHIP CAPACITOR	GRM40B223K25PT	C174	1
683	CHIP CAPACITOR	GRM40B222K50PT	C175	1
684	CHIP TANTALUM	ECST1CY684R	C176	1
685	CHIP TANTALUM	ECST1VY334R	C177	1
686	CHIP CAPACITOR	GRM42-6B105K16NPT	C178	1
687	CHIP CAPACITOR	GRM40B473K25PT	C179	1
688	CHIP CAPACITOR	GRM40B473K25PT	C180	1
689	CHIP CAPACITOR	GRM40B473K25PT	C181	1
690	CHIP CAPACITOR	GRM40B473K25PT	C182	1
691	CHIP CAPACITOR	GRM40CH101J50PT	C183	1

692	CHIP CAPACITOR	GRM42-6B105K16NPT	C184	1
693	CHIP CAPACITOR	GRM40B153K50PT	C185	1
694	CHIP CAPACITOR	GRM40B153K50PT	C186	1
695	DISCRIMINATOR	CDBM455C7	CD101	1
696	CERAMIC FILTER	CFWM455G	CF101	1
697	CERAMIC FILTER	CFWM455G	CF102	1
698	CONNECTOR	LPC-2T7M	CP103	1
699	CONNECTOR	LPC-6T7M	CP104	1
700	CHIP DIODE	1SS356-TW11	D115	1
701	CHIP DIODE	1SS356-TW11	D116	1
702	CHIP DIODE	1SS355	D117	1
703	CHIP DIODE	RB501V-40TE17	D123	1
704	CHIP VARICAP	EVM-7JSX30B24	FVR101	1
705	CHIP INDUCTOR	NL322522TR68J	L115	1
706	CHIP INDUCTOR	ELJ-NCR47KF	L117	1
707	CHIP TRANSISTOR	2SC4250-TE85R	Q113	1
708	CHIP TRANSISTOR	DTC314TK-T146	Q114	1
709	CHIP FET	2SK209-Y-TE85R	Q115	1
710	CHIP FET	2SK209-Y-TE85R	Q116	1
711	CHIP TRANSISTOR	2SK3018-T106	Q127	1
712	CHIP RESISTOR	MCR10EZHJ104	R160	1
713	CHIP CAPACITOR	GRM40CK1R5J50PT	R161	1
714	CHIP RESISTOR	MCR10EZHJ000	R162	1
715	CHIP RESISTOR	MCR10EZHJ471	R163	1
716	CHIP RESISTOR	MCR10EZHJ561	R164	1
717	CHIP RESISTOR	MCR10EZHJ331	R165	1
718	CHIP RESISTOR	MCR10EZHJ122	R166	1
719	CHIP RESISTOR	MCR10EZHJ103	R167	1
720	CHIP RESISTOR	MCR10EZHJ474	R168	1
721	CHIP RESISTOR	MCR10EZHJ000	R169	1
722	CHIP RESISTOR	MCR10EZHJ392	R170	1
723	CHIP RESISTOR	MCR10EZHJ821	R171	1
724	CHIP RESISTOR	MCR10EZHJ103	R172	1
725	CHIP RESISTOR	MCR10EZHJ104	R173	1
726	CHIP RESISTOR	MCR10EZHJ223	R174	1
727	CHIP RESISTOR	MCR10EZHJ102	R175	1
728	CHIP RESISTOR	MCR10EZHJ392	R176	1
729	CHIP RESISTOR	MCR10EZHJ272	R177	1
730	CHIP RESISTOR	MCR10EZHJ154	R178	1
731	CHIP RESISTOR	MCR10EZHJ154	R179	1
732	CHIP RESISTOR	MCR10EZHJ154	R180	1
733	CHIP RESISTOR	MCR10EZHJ103	R181	1
734	CHIP DIODE	RB501V-40TE17	R182	1
735	CRYSTAL FILTER	48.045MHZ	X101	1
736	CRYSTAL FILTER	48S15B	X102A	1
737	CRYSTAL FILTER	48S15B	X102B	1
738	CF COVER	4A10-1624		2
739	P.C.B.	51IF86-2□1/4□		1
740	SCREW SEMS	SE-3 X 6		2

MODEL	KG510 VHF	CODE : KG510-20B50K	UNIT : 510LOG UNIT	
NO.	PARTS NAME	DESCRIPTION	CIRCUIT REFERENCE	
741	CHIP IC	UPD78F0058	IC1	1
742	IC	AK2344	IC2	1
743	IC	AK2344	IC3	1
744	CHIP IC	AN78L05M	IC4	1

745	CHIP IC	AN78L05M	IC5	1
746	CHIP IC	NJM2405M-T1	IC6	1
747	EE ROM	HN58C65RFP-25T	IC7	1
748	CHIP IC	TC74HC373AF(TP1)	IC8	1
749	CHIP IC	RN5VL22AA-TL	IC9	1
750	CHIP IC	TA75S01F-TE85R	IC10	1
751	CHIP IC	BU4S81-TR	IC11	1
752	CHIP IC	BU4S01-TR	IC12	1
753	CHIP IC	TS272CD	IC13	1
754	CHIP IC	TS272CD	IC14	1
755	CHIP IC	BU4S81-TR	IC15	1
756	CHIP IC	NJM2073M-T1	IC16	1
757	CHIP IC	BU4S66-TR	IC17	1
758	CHIP IC	TC7W74FU(TE12L)	IC18	1
759	CHIP COIL	FBMH3216HM501NT	BL1	1
760	CHIP COIL	BLM21B421SPT	BL2	1
761	CHIP COIL	BLM21B421SPT	BL3	1
762	CHIP COIL	BLM21B421SPT	BL4	1
763	CHIP COIL	BLM21B421SPT	BL5	1
764	CHIP COIL	BLM21B421SPT	BL6	1
765	CHIP COIL	BLM21B421SPT	BL7	1
766	CHIP ELECTROLYT	UWT1E4R7MCR1GB	C1	1
767	CHIP TANTALUM	ECST1CY105R	C2	1
768	CHIP TANTALUM	ECST1CY105R	C3	1
769	CHIP ELECTROLYT	UWT1C470MCR1GB	C4	1
770	CHIP CAPACITOR	GRM40B104K25PT	C5	1
771	CHIP CAPACITOR	GRM40B104K25PT	C6	1
772	CHIP CAPACITOR	GRM40B222K50PT	C7	1
773	CHIP CAPACITOR	GRM40CH331J50PT	C8	1
774	DISK CAPACITOR	EECS5R5H474	C9	1
775	CHIP TANTALUM	ECST1VY224R	C10	1
776	CHIP CAPACITOR	GRM40B103K50PT	C11	1
777	CHIP CAPACITOR	GRM42-6B225K16PT	C12	1
778	CHIP CAPACITOR	GRM40CH221J50PT	C13	1
779	CHIP CAPACITOR	GRM40CH470J50PT	C14	1
780	CHIP CAPACITOR	GRM40B103K50PT	C15	1
781	CHIP TANTALUM	ECST1CY105R	C16	1
782	CHIP TANTALUM	ECST1CY105R	C17	1
783	CHIP CAPACITOR	GRM40B104K25PT	C19	1
784	CHIP CAPACITOR	GRM40B473K25PT	C20	1
785	CHIP CAPACITOR	GRM40B104K25PT	C21	1
786	CHIP CAPACITOR	GRM40CH470J50PT	C22	1
787	CHIP CAPACITOR	GRM40B104K25PT	C23	1
788	CHIP CAPACITOR	GRM42-6B225K16PT	C24	1
789	CHIP TANTALUM	ECST1CY105R	C25	1
790	CHIP CAPACITOR	GRM40B104K25PT	C27	1
791	CHIP CAPACITOR	GRM40B104K25PT	C28	1
792	CHIP CAPACITOR	GRM40CH820J50PT	C31	1
793	CHIP CAPACITOR	GRM40B104K25PT	C32	1
794	CHIP CAPACITOR	GRM40B104K25PT	C33	1
795	CHIP CAPACITOR	GRM40B103K50PT	C36	1
796	CHIP CAPACITOR	GRM40B473K25PT	C37	1
797	CHIP CAPACITOR	GRM40CH220J50PT	C38	1

798	CHIP CAPACITOR	GRM40CH220J50PT	C39	1
799	CHIP TANTALUM	ECST1EY474R	C40	1
800	CHIP CAPACITOR	GRM40B473K25PT	C42	1
801	CHIP CAPACITOR	GRM40CH330J50PT	C43	1
802	CHIP CAPACITOR	GRM40B473K25PT	C44	1
803	CHIP CAPACITOR	GRM40CH220J50PT	C45	1
804	CHIP CAPACITOR	GRM40CH220J50PT	C46	1
805	CHIP CAPACITOR	GRM40B103K50PT	C47	1
806	CHIP CAPACITOR	GRM40B103K50PT	C48	1
807	CHIP CAPACITOR	GRM40B103K50PT	C49	1
808	CHIP CAPACITOR	GRM40B333K25PT	C50	1
809	CHIP CAPACITOR	GRM40CH820J50PT	C51	1
810	CHIP CAPACITOR	GRM40B103K50PT	C52	1
811	CHIP TANTALUM	ECST1CY105R	C53	1
812	CHIP TANTALUM	ECST1CY105R	C54	1
813	CHIP CAPACITOR	GRM40CH470J50PT	C55	1
814	CHIP CAPACITOR	GRM42-6B225K16PT	C58	1
815	CHIP TANTALUM	ECST1VY224R	C59	1
816	CHIP CAPACITOR	GRM40B104K25PT	C60	1
817	CHIP CAPACITOR	GRM40B104K25PT	C61	1
818	CHIP CAPACITOR	GRM40B473K25PT	C62	1
819	CHIP CAPACITOR	GRM40B473K25PT	C63	1
820	CHIP CAPACITOR	GRM40B104K25PT	C64	1
821	CHIP CAPACITOR	GRM40B682K50PT	C65	1
822	CHIP CAPACITOR	GRM40B473K25PT	C66	1
823	CHIP CAPACITOR	GRM40CH470J50PT	C67	1
824	CHIP CAPACITOR	GRM40B104K25PT	C68	1
825	CHIP CAPACITOR	GRM42-6B105K16NPT	C69	1
826	CHIP CAPACITOR	GRM40B104K25PT	C70	1
827	CHIP ELECTROLYT	UWT1C470MCR1GB	C71	1
828	CHIP TANTALUM	ECST1EY474R	C72	1
829	CHIP CAPACITOR	GRM40B104K25PT	C73	1
830	CHIP ELECTROLYT	UWT1C100MCR1GB	C74	1
831	CHIP CAPACITOR	GRM40B103K50PT	C75	1
832	CHIP CAPACITOR	GRM40B104K25PT	C76	1
833	CHIP ELECTROLYT	UWT1C470MCR1GB	C77	1
834	CHIP ELECTROLYT	UWT1C470MCR1GB	C78	1
835	CHIP CAPACITOR	GRM40B104K25PT	C79	1
836	CHIP CAPACITOR	GRM40B102K50PT	C80	1
837	CHIP CAPACITOR	GRM40B102K50PT	C81	1
838	CHIP CAPACITOR	GRM40B102K50PT	C82	1
839	CHIP CAPACITOR	GRM40B102K50PT	C83	1
840	CHIP CAPACITOR	GRM40B102K50PT	C84	1
841	CHIP CAPACITOR	GRM40B102K50PT	C85	1
842	CHIP CONNECTOR	00-6200-520-330-000	CN1	1
843	CHIP CONNECTOR	00-6200-516-230-000	CN2	1
844	CHIP CONNECTOR	00-6200-516-230-000	CN3	1
845	CHIP CONNECTOR	236A-08-90-134	CN4	1
846	CHIP CONNECTOR	236A-08-90-134	CN5	1
847	CONNECTOR	SB20-03WS	CN6	1
848	CHIP CONNECTOR	00-6200-516-230-000	CN7	1
849	CHIP CONNECTOR	00-6200-516-230-000	CN8	1
850	CHIP CONNECTOR	00-6200-520-330-000	CN9	1

851	CHIP DIODE	1SS355	D1	1
852	CHIP DIODE	1SS355	D2	1
853	CHIP DIODE	1SS355	D3	1
854	CHIP DIODE	1SS355	D4	1
855	CHIP DIODE	1SS355	D5	1
856	CHIP DIODE	RB501V-40TE-17	D7	1
857	CHIP DIODE	1SS355	D8	1
858	CHIP DIODE	DAP202U-T106	D9	1
859	CHIP DIODE	DAP202U-T106	D10	1
860	CHIP DIODE	RB501V-40TE-17	D11	1
861	CHIP DIODE	DAN202U-T106	D12	1
862	CHIP DIODE	1SS355	D13	1
863	CHIP DIODE	1SS355	D14	1
864	CHIP DIODE	1SS355	D15	1
865	CHIP TRIMMER	TZV02R200A110	FVC1	1
866	CHIP VARICAP	EVM-7JSX30B24	FVR1	1
867	CHIP VARICAP	EVM-7JSX30B25	FVR2	1
868	CHIP VARICAP	EVM-7JSX30B54	FVR3	1
869	JUMPER PLUG	DIC-149-3P	JP1	1
870	JUMPER SOCKET	DIC-128	JS	1
871	CHIP FET	2SK209-Y-TE85R	Q1	1
872	CHIP FET	2SK209-Y-TE85R	Q2	1
873	CHIP FET	2SK209-Y-TE85R	Q3	1
874	CHIP FET	2SK209-Y-TE85R	Q4	1
875	CHIP TRANSISTOR	RN6001-TE12R,C	Q6	1
876	CHIP TRANSISTOR	DTC124EKA-T146	Q7	1
877	CHIP RESISTOR	MCR10EZHJ104	R00	1
878	CHIP RESISTOR	MCR10EZHJ154	R1	1
879	CHIP RESISTOR	MCR10EZHJ113	R2	1
880	CHIP RESISTOR	MCR10EZHJ225	R3	1
881	CHIP RESISTOR	MCR10EZHJ184	R4	1
882	CHIP RESISTOR	MCR10EZHJ105	R5	1
883	CHIP RESISTOR	MCR10EZHJ273	R6	1
884	CHIP RESISTOR	MCR10EZHJ104	R7	1
885	CHIP RESISTOR	MCR10EZHJ273	R8	1
886	CHIP RESISTOR	MCR10EZHJ823	R01	1
887	CHIP RESISTOR	MCR10EZHJ562	R02	1
888	CHIP RESISTOR	MCR10EZHJ225	R03	1
889	CHIP RESISTOR	MCR10EZHJ273	R04	1
890	CHIP RESISTOR	MCR10EZHJ473	R05	1
891	CHIP RESISTOR	MCR10EZHJ104	R9	1
892	CHIP RESISTOR	MCR10EZHJ473	R10	1
893	CHIP RESISTOR	MCR10EZHJ752	R11	1
894	CHIP RESISTOR	MCR10EZHJ682	R12	1
895	CHIP RESISTOR	MCR10EZHJ101	R13	1
896	CHIP RESISTOR	MCR10EZHJ103	R14	1
897	CHIP RESISTOR	MCR10EZHJ393	R15	1
898	CHIP RESISTOR	MCR10EZHJ153	R16	1
899	CHIP RESISTOR	MCR10EZHJ103	R17	1
900	CHIP RESISTOR	MCR10EZHJ473	R18	1
901	CHIP RESISTOR	MCR10EZHJ223	R19	1
902	CHIP RESISTOR	MCR10EZHJ154	R20	1
903	CHIP RESISTOR	MCR10EZHJ104	R21	1
904	CHIP RESISTOR	MCR10EZHJ472	R22	1

905	CHIP RESISTOR	MCR10EZHJ104	R23	1
906	CHIP RESISTOR	MCR10EZHJ154	R24	1
907	CHIP RESISTOR	MCR10EZHJ183	R25	1
908	CHIP RESISTOR	MCR10EZHJ473	R26	1
909	CHIP RESISTOR	MCR10EZHJ222	R27	1
910	CHIP RESISTOR	MCR10EZHJ823	R28	1
911	CHIP RESISTOR	MCR10EZHJ154	R29	1
912	CHIP RESISTOR	MCR10EZHJ154	R30	1
913	CHIP RESISTOR	MCR10EZHJ103	R32	1
914	CHIP RESISTOR	MCR10EZHJ473	R33	1
915	CHIP RESISTOR	MCR10EZHJ154	R34	1
916	CHIP RESISTOR	MCR10EZHJ223	R35	1
917	CHIP RESISTOR	MCR10EZHJ223	R36	1
918	CHIP RESISTOR	MCR10EZHJ104	R37	1
919	CHIP RESISTOR	MCR10EZHJ105	R38	1
920	CHIP RESISTOR	MCR10EZHJ472	R39	1
921	CHIP RESISTOR	MCR10EZHJ102	R40	1
922	CHIP RESISTOR	MCR10EZHJ472	R41	1
923	CHIP RESISTOR	MCR10EZHJ473	R42	1
924	CHIP RESISTOR	MCR10EZHJ563	R43	1
925	CHIP RESISTOR	MCR10EZHJ103	R44	1
926	CHIP RESISTOR	MCR10EZHJ000	R45	1
927	CHIP RESISTOR	MCR10EZHJ000	R46	1
928	CHIP RESISTOR	MCR10EZHJ223	R47	1
929	CHIP RESISTOR	MCR10EZHJ103	R49	1
930	CHIP RESISTOR	MCR10EZHJ105	R50	1
931	CHIP RESISTOR	MCR10EZHJ823	R52	1
932	CHIP RESISTOR	MCR10EZHJ333	R53	1
933	CHIP RESISTOR	MCR10EZHJ103	R54	1
934	CHIP RESISTOR	MCR10EZHJ154	R55	1
935	CHIP RESISTOR	MCR10EZHJ333	R56	1
936	CHIP RESISTOR	MCR10EZHJ683	R57	1
937	CHIP RESISTOR	MCR10EZHJ104	R58	1
938	CHIP RESISTOR	MCR10EZHJ104	R59	1
939	CHIP RESISTOR	MCR10EZHJ154	R60	1
940	CHIP RESISTOR	MCR10EZHJ103	R61	1
941	CHIP RESISTOR	MCR10EZHJ823	R62	1
942	CHIP RESISTOR	MCR10EZHJ103	R63	1
943	CHIP RESISTOR	MCR10EZHJ124	R64	1
944	CHIP RESISTOR	MCR10EZHJ104	R65	1
945	CHIP RESISTOR	MCR10EZHJ104	R66	1
946	CHIP RESISTOR	MCR10EZHJ473	R67	1
947	CHIP RESISTOR	MCR10EZHJ124	R68	1
948	CHIP RESISTOR	MCR10EZHJ223	R69	1
949	CHIP RESISTOR	MCR10EZHJ154	R70	1
950	CHIP RESISTOR	MCR10EZHJ104	R71	1
951	CHIP RESISTOR	MCR10EZHJ154	R72	1
952	CHIP RESISTOR	MCR10EZHJ184	R73	1
953	CHIP RESISTOR	MCR10EZHJ3R3	R74	1
954	CHIP RESISTOR	MCR10EZHJ474	R75	1
955	CHIP RESISTOR	MCR10EZHJ472	R76	1
956	CHIP RESISTOR	MCR50EZHJ4R7	R77	1
957	CHIP RESISTOR	MCR10EZHJ472	R78	1

958	CHIP RESISTOR	MCR10EZHJ104	R79	1
959	CHIP RESISTOR	MCR10EZHJ473	R80	1
960	CHIP RESISTOR	MCR10EZHJ103	R82	1
961	CHIP RESISTOR	MCR10EZHJ104	R83	1
962	CHIP RESISTOR	MCR10EZHJ473	R84	1
963	CHIP RESISTOR	MCR10EZHJ472	R85	1
964	CHIP RESISTOR	MCR10EZHJ103	R86	1
965	CHIP RESISTOR	MCR10EZHJ271	R87	1
966	CHIP RESISTOR	MCR10EZHJ271	R88	1
967	CHIP RESISTOR	MCR10EZHJ473	R89	1
968	CHIP RESISTOR	MCR10EZHJ154	R90	1
969	CHIP RESISTOR	MCR10EZHJ223	R91	1
970	CHIP RESISTOR	MCR10EZHJ273	R94	1
971	CHIP RESISTOR	MCR10EZHJ154	R95	1
972	CHIP RESISTOR	MCR10EZHJ472	R96	1
973	CHIP RESISTOR	MCR10EZHJ394	R97	1
974	CHIP RESISTOR	MCR10EZHJ102	R98	1
975	CHIP RESISTOR	MCR10EZHJ103	R99	1
976	CHIP R ARRAY	MNR14E0ABJ472	RA1	1
977	CHIP R ARRAY	MNR14E0ABJ472	RA2	1
978	CHIP R ARRAY	MNR14E0ABJ472	RA3	1
979	CHIP CHECKER	RCT	TP1	1
980	CRYSTAL	DS-MAT309-4.19MHZ	X1	1
981	CRYSTAL	3.6864MHZ(SMD)	X2	1
982	CRYSTAL	3.6864MHZ(SMD)	X3	1
983	P.C.B.	51LOG87-4□1/2□		1
MODEL	KG510 VHF	CODE : KG510-20B50K	UNIT : 510PA UNIT	
NO.	PARTS NAME	DESCRIPTION	CIRCUIT REFERENCE	
984	CHIP IC	BAM4558F	IC501	1
985	CHIP IC	TA75S01F-TE85R	IC502	1
986	CHIP IC	M5237ML-600C	IC503	1
987	CHIP IC	AN78L05M	IC504	1
988	COIL LEAD CHOKE	FBA04VA900KF	BL505	1
989	COIL LEAD CHOKE	FBA04VA900KF	BL506	1
990	CHIP COIL	FBMH3216HM501NT	BL507	1
991	CHIP COIL	FBMH3216HM501NT	BL508	1
992	COIL LEAD CHOKE	FBA04VA900KF	BL509	1
993	CHIP COIL	FBMH3216HM501NT	BL510	1
994	COIL LEAD CHOKE	FBA04VA900KF	BL512	1
995	COIL LEAD CHOKE	FBA04VA900KF	BL514	1
996	CHIP CAPACITOR	GRM40B102K50PT	C501	1
997	CHIP CAPACITOR	GRM40B102K50PT	C502	1
998	CHIP CAPACITOR	GRM40B471K50PT	C503	1
999	CHIP CAPACITOR	GRM40CH180J50PT	C504	1
1000	CHIP CAPACITOR	GRM40B102K50PT	C505	1
1001	CHIP CAPACITOR	GRM40B102K50PT	C506	1
1002	CHIP CAPACITOR	GRM40CH151J50PT	C507	1
1003	CHIP MICA	UC342H0560J	C509	1
1004	CHIP MICA	UC342H0330J	C510	1
1005	CHIP MICA	UC342H1800J	C511	
1006	CHIP MICA	UC342H2200J	C512	1
1007	MICA	RM40A2H270J	C513	1
1008	MICA	RM40A2H270J	C514	1
1009	MICA	RM40A2H820J	C515	1

1010	MICA	RM40A2H100J	C516	1
1011	CHIP MICA	UC342H1200J	C519	1
1012	CHIP MICA	UC552H1001J	C520	1
1013	CHIP MICA	UC342H0100D	C521	1
1014	CHIP MICA	UC342H0820J	C522	1
1015	CHIP CAPACITOR	GRM40CK1R5J50PT	C524	1
1016	CHIP CAPACITOR	GRM40B102K50PT	C525	1
1017	CHIP CAPACITOR	GRM40B102K50PT	C526	1
1018	CHIP CAPACITOR	GRM40B102K50PT	C527	1
1019	CHIP CAPACITOR	GRM40B102K50PT	C528	1
1020	CHIP CAPACITOR	GRM40B102K50PT	C529	1
1021	CHIP CAPACITOR	GRM40B102K50PT	C530	1
1022	MICA	RM40A2H150J	C531	1
1023	CHIP MICA	UC232H0100J	C532	1
1024	CHIP MICA	UC232H0220J	C533	1
1025	CHIP MICA	UC232H0220J	C534	1
1026	CHIP MICA	UC232H0100J	C535	1
1027	AXIAL LEAD	UP050SL010M-NAC	C536	1
1028	CHIP CAPACITOR	GRM40CK0R5B50PT	C539	1
1029	CHIP CAPACITOR	GRM40B102K50PT	C540	1
1030	CHIP ELECTROLYT	UWT1E4R7MCR1GB	C541	1
1031	CHIP CAPACITOR	GRM40B103K50PT	C542	1
1032	CHIP CAPACITOR	GRM40B102K50PT	C543	1
1033	CHIP MICA	UC342H4700J	C544	1
1034	CHIP CAPACITOR	GRM40B102K50PT	C545	1
1035	CHIP TANTALUM	ECST1VY224R	C546	1
1036	CHIP CAPACITOR	GRM40B102K50PT	C547	1
1037	CHIP CAPACITOR	GRM40B102K50PT	C548	1
1038	CHIP CAPACITOR	GRM40B472K50PT	C549	1
1039	CHIP CAPACITOR	GRM40B104K25PT	C550	1
1040	CHIP ELECTROLYT	UWT1E330MCR1GB	C552	1
1041	CHIP CAPACITOR	GRM40B104K25PT	C553	1
1042	CHIP ELECTROLYT	UWT1E330MCR1GB	C554	1
1043	CHIP TANTALUM	ECST1CY225R	C555	1
1044	CHIP CAPACITOR	GRM40B104K25PT	C556	1
1045	CHIP MICA	UC232H0040D	C558	1
1046	CHIP MICA	UC232H0030D	C559	1
1047	CHIP CAPACITOR	GRM40B102K50PT	C561	1
1048	CHIP CAPACITOR	GRM40B104K25PT	C562	1
1049	CHIP MICA	UC342H2200J	C564	1
1050	CHIP MICA	UC342H2200J	C565	1
1051	CHIP CAPACITOR	GRM40B102K50PT	C566	1
1052	CONNECTOR	SM551	CN501	1
1053	CONNECTOR	4A-S588	CN502	1
1054	CHIP DIODE	1SS355	D501	1
1055	CHIP DIODE	RB501V-40TE-17	D502	1
1056	CHIP DIODE	RB501V-40TE-17	D503	1
1057	CHIP DIODE	RB501V-40TE-17	D504	1
1058	CHIP DIODE	RB501V-40TE-17	D505	1
1059	CHIP ZENNER DIODE	UDZ2.4B-TE17	D506	1
1060	CHIP DIODE	1SS355	D507	1
1061	CHIP DIODE	1SS355	D508	1
1062	CHIP DIODE	1SS355	D509	1
1063	CHIP DIODE	SML210-VT-T86	D510	1

1064	CHIP DIODE	1SR154-400	D511	1
1065	THROUCH C.	1HB340YE102PDA05	FC501	1
1066	THROUCH C.	1HB340YE102PDA05	FC503	1
1067	VR □□	TC-6S 18P	FVC503	
1068	VR □□ □	TC-6S 18P	FVC505	1
1069	CHIP VARICAP	EVM-7JSX30B15	FVR501	1
1070	CHIP VR	G3AT 2K	FVR502	1
1071	CHIP VR	G3AT 2K	FVR503	1
1072	CHIP VARICAP	EVM-7JSX30B15	FVR504	1
1073	CHIP RESISTOR	MCR10EZHJ000	L501	1
1074	CHIP COIL	KQ1008TER47J	L502	1
1075	CHIP COIL	FBMH3216HM501NT	L503	1
1076	COIL □□□	FL06BT04	L504	1
1077	COIL □□ □	FL06BT04	L505	1
1078	COIL	4A-S590	L506	1
1079	COIL □ □□	FL06BT04	L507	1
1080	COIL	4A-S596	L508	1
1081	COIL	4A-S640	L509	1
1082	COIL	4A-S640	L511	1
1083	COIL	4A-S641	L510	1
1084	TRANSISTOR	2SC2131	Q501	1
1085	CHIP TRANSISTOR	DTC124EKA-T146	Q502	1
1086	CHIP TRANSISTOR	DTB143EK-T146	Q503	1
1087	CHIP TRANSISTOR	2SC2412K	Q504	1
1088	TRANSISTOR	2SB1018A	Q505	1
1089	TRANSISTOR	2SC3022	Q506	1
1090	CHIP TRANSISTOR	2SK2731-T146	Q507	1
1091	TRANSISTOR	2SC2694	Q508	1
1092	CHIP RESISTOR	MCR10EZHJ182	R501	1
1093	CHIP RESISTOR	MCR10EZHJ331	R502	1
1094	CHIP RESISTOR	MCR10EZHJ4R7	R503	1
1095	CHIP RESISTOR	MCR10EZHJ331	R504	1
1096	CHIP RESISTOR	MCR10EZHJ2R2	R505	1
1097	CHIP RESISTOR	MCR10EZHJ151	R506	1
1098	CHIP RESISTOR	MCR18EZHJ471	R507	1
1099	CHIP RESISTOR	MCR10EZHJ222	R508	1
1100	CHIP RESISTOR	MCR50EZHJ4R7	R509	1
1101	CHIP RESISTOR	MCR10EZHJ103	R510	1
1102	CHIP RESISTOR	MCR10EZHJ103	R511	1
1103	CHIP RESISTOR	MCR10EZHJ103	R512	1
1104	CHIP RESISTOR	MCR10EZHJ471	R513	1
1105	CHIP RESISTOR	MCR10EZHJ562	R514	1
1106	CHIP RESISTOR	MCR10EZHJ473	R515	1
1107	CHIP RESISTOR	MCR10EZHJ474	R516	1
1108	CHIP RESISTOR	MCR10EZHJ104	R517	1
1109	CHIP RESISTOR	MCR10EZHJ682	R518	1
1110	CHIP RESISTOR	MCR10EZHJ103	R519	1
1111	CHIP RESISTOR	MCR10EZHJ102	R520	1
1112	CHIP RESISTOR	MCR10EZHJ102	R521	1
1113	CHIP RESISTOR	MCR10EZHJ562	R522	1
1114	CHIP RESISTOR	MCR10EZHJ392	R523	1
1115	CHIP RESISTOR	MCR10EZHJ562	R524	1
1116	CHIP RESISTOR	MCR10EZHJ104	R525	1

1117	CHIP RESISTOR	MCR10EZHJ104	R526	1
1118	CHIP RESISTOR	MCR10EZHJ102	R528	1
1119	CHIP RESISTOR	MCR10EZHJ473	R529	1
1120	CHIP RESISTOR	MCR10EZHJ104	R530	1
1121	CHIP RESISTOR	MCR10EZHJ271	R531	1
1122	CHIP RESISTOR	MCR100EZHJ271	R532	1
1123	CHIP RESISTOR	MCR10EZHJ104	R533	1
1124	CHIP RESISTOR	MCR10EZHJ123	R534	1
1125	CHIP RESISTOR	MCR10EZHJ472	R535	1
1126	CHIP RESISTOR	MCR10EZHJ184	R536	1
1127	CHIP RESISTOR	MCR10EZHJ102	R537	1
1128	CHIP RESISTOR	MCR10EZHJ222	R538	1
1129	CHIP RESISTOR	MCR10EZHJ271	R539	1
1130	CHIP RESISTOR	MCR10EZHJ272	R540	1
1131	CHIP RESISTOR	MCR10EZHJ472	R541	1
1132	CHIP RESISTOR	MCR10EZHJ472	R542	1
1133	CHIP RESISTOR	MCR10EZHJ272	R543	1
1134	CHIP RESISTOR	MCR10EZHJ151	R545	1
1135	CHIP RESISTOR	MCR10EZHJ822	R546	1
1136	CHIP RESISTOR	MCR10EZHJ470	R547	1
1137	CHIP RESISTOR	MCR50EZHJ000	R549	1
1138	CHIP RESISTOR	MCR50EZHJ1R0	R550	1
1139	RESISTOR	RSMF2B 47	R552	1
1140	CHIP RESISTOR	MCR50EZHJ2R2	R556	1
1141	CHIP RESISTOR	MCR50EZHJ470	R557	1
1142	CHIP RESISTOR	MCR50EZHJ331	R558	1
1143	CHIP CHECKER	RCT	TP501	1
1144	CHIP CHECKER	RCT	TP502	1
1145	SHIELD PLATE	4A10-3111		1
1146	P.C.B.	51PA217-1		1
MODEL	KG510 VHF	CODE : KG510-20B50K	UNIT : 510PAP UNIT	
NO.	PARTS NAME	DESCRIPTION	CIRCUIT REFERENCE	
1147	COIL LEAD CHOKE	FBA04VA900KF	BL516	1
1148	COIL LEAD CHOKE	FBA04VA900KF	BL517	1
1149	THROUCH C.	1HB340YE102PDA05	FC502	1
1150	MYCROHEDA	JM16LH-03CBT	CN503	1
1151	CONNECTOR	4A-S600	CP501	1
1152	CONNECTOR	4A-S601	DC -	1
1153	CONNECTOR	4A-S602	DC +	1
1154	P.C.B.	51PAP8X□1/4□		1
MODEL	KG510 VHF	CODE : KG510-20B50K	UNIT : 510PA CHASSIS UNIT	
NO.	PARTS NAME	DESCRIPTION	CIRCUIT REFERENCE	
1155	BOSS	4A10-2999		8
1156	PA COVER	3A10-0574		1
1157	PA FRAME	2A10-0211		1
1158	SCREW SEMS	SE-3 X 5		7
1159	PA SEAL-510	3A10-0596		1
1160	SCREW SEMS	SE-3 X 8		8
MODEL	KG510 VHF	CODE : KG510-20B50K	UNIT : 510DC UNIT	
NO.	PARTS NAME	DESCRIPTION	CIRCUIT REFERENCE	
1161	DC PLUG	21-3B	CN701	1
1162	CONNECTOR	SB20-02WS	CN702	1
1163	CONNECTOR	SB20-02WS	CN703	1
1164	TERMINAL	42822-2	CP701	1
1165	TERMINAL	42117-2	CP702	1

1166	CONNECTOR	4A-S603	CP703	1
1167	DIODE □□□	20DL2C	D701	1
1168	CHIP DIODE	1SR154-400TE25	D702	1
1169	CHIP TRANSISTOR	2SD2153	Q701	1
1170	P.C.B.	51DC99□1/4□		1
1171	CHIP CONNECTOR	00-6200-520-330-000	CN601	1
1172	CHIP CONNECTOR	00-6200-516-230-000	CN602	1
1173	P.C.B.	51DSUB9X□1/4□		1
1174	CONNECTOR	DELC-J25SAF-20L9	CN603	1
1175	CONNECTOR	DELC-J9SAF-20L9	CN604	1

MODEL	KG510 VHF	CODE : KG510-20B50K	UNIT : 510ASSY	
NO.	PARTS NAME	DESCRIPTION	CIRCUIT REFERENCE	
1176	SIDE(L)	2A10-0207		1
1177	SIDE(R)	2A10-0208		1
1178	HEAT SINK	2A10-0209		1
1179	CHASSIS-KG510	3A10-0572		1
1180	REAR PANEL	2A10-0212		1
1181	PLATE	4A10-2995		1
1182	TR HEAT SINK(UHF)	4A10-3027		1
1183	FUSE HOLDER	SN-2054#01C		1
1184	RUBBER CUSHION	SJ-5009		4
1185	BNC CONNECTOR	BNC-J/NJ(F)		1
1186	BNC CONNECTOR	BNC-PA-JJ		1
1187	FUSE	FGBO 125V 20A		2
1188	BOTTOM COVER	3A10-0571		1
1189	FLAT CABLE	4A-S579	FL601	1
1190	FLAT CABLE	4A-S580	FL602	1
1191	SCREW BIND(BLK)	BDB-3 X 6		8
1192	FLAT CABLE	4A-S471	FL102	1
1193	FLAT CABLE	4A-S471	FL202	1
1194	SCREW FLAT	FL-3 X 8		3
1195	SCREW SEMS(BLK)	SEB-4 X 10		24
1196	SCREW SEMS(BLK)	SEB-4 X 10		4
1197	SCREW OVAL(BLK)	OVB-4 X 8		2
1198	SCREW SEMS	SE-2.6 X 8		4
1199	DC SOCKET	21-3A		1
1200	HANDLE	3A10-0570		2
1201	PROTECTOR(R)	3A10-0578		1
1202	PROTECTOR(L)	3A10-0579		1
1203	SCREW SEMS	SE-3 X 8		27
1204	SCREW SEMS	SE-3 X 10		4
1205	NUT	NT-3		4
1206	WASHER	FW-3(L)		4

KG510-15B

UNIT NAME	PARTS NAME	DESCRIPTION	PARTS NO	QUTY
TX MAIN UNIT/160	CHIP IC	AN78L05M	IC201	1
TX MAIN UNIT/160	CHIP IC	TA78M05F-TE16L	IC202	1
TX MAIN UNIT/160	CHIP IC	TS272CD	IC203	1
TX MAIN UNIT/160	CHIP IC	TA75S01F-TE85R	IC204	1
TX MAIN UNIT/160	CHIP IC	MB1511PFV-G-BND-EF	IC205	1
TX MAIN UNIT/160	CHIP IC	NJU7662M-T1	IC206	1
TX MAIN UNIT/160	CHIP IC	BU4S66-TR	IC207	1
TX MAIN UNIT/160	CHIP IC	M5237ML-600C	IC208	1
TX MAIN UNIT/160	CHIP IC	NJM2904M-T1	IC209	1
TX MAIN UNIT/160	CHIP COIL	FBMH3216HM501NT	BL201	1
TX MAIN UNIT/160	CHIP COIL	FBMH3216HM501NT	BL202	1
TX MAIN UNIT/160	CHIP COIL	BLM21B421SPT	BL203	1
TX MAIN UNIT/160	CHIP COIL	BLM21B421SPT	BL204	1
TX MAIN UNIT/160	CHIP COIL	BLM21B421SPT	BL205	1
TX MAIN UNIT/160	CHIP COIL	FBMH3216HM501NT	BL206	1
TX MAIN UNIT/160	CHIP COIL	BLM21B421SPT	BL207	1
TX MAIN UNIT/160	CHIP ELECTROLYT	MVK16VC10M D55	C201	1
TX MAIN UNIT/160	CHIP TANTALUM	ECST1AY475R	C202	1
TX MAIN UNIT/160	CHIP TANTALUM	ECST1CY105R	C203	1
TX MAIN UNIT/160	CHIP CAPACITOR	GRM40CH101J50PT	C204	1
TX MAIN UNIT/160	CHIP CAPACITOR	GRM42-6B105K16NPT	C205	1
TX MAIN UNIT/160	CHIP CAPACITOR	GRM40CH470J50PT	C207	1
TX MAIN UNIT/160	CHIP TANTALUM	ECST1VY224R	C208	1
TX MAIN UNIT/160	CHIP CAPACITOR	GRM42-6B105K16NPT	C209	1
TX MAIN UNIT/160	CHIP CAPACITOR	GRM40B102K50PT	C210	1
TX MAIN UNIT/160	CHIP CAPACITOR	GRM40B473K25PT	C211	1
TX MAIN UNIT/160	CHIP ELECTROLYT	MVK16VC10M D55	C212	1
TX MAIN UNIT/160	CHIP ELECTROLYT	MVK16VC10M D55	C213	1
TX MAIN UNIT/160	CHIP CAPACITOR	GRM40B473K25PT	C214	1
TX MAIN UNIT/160	CHIP CAPACITOR	GRM40CH151J50PT	C215	1
TX MAIN UNIT/160	CHIP CAPACITOR	GRM40CH100D50PT	C217	1
TX MAIN UNIT/160	CHIP CAPACITOR	GRM40B153K50PT	C218	1
TX MAIN UNIT/160	CHIP TANTALUM	ECST1CY225R	C219	1
TX MAIN UNIT/160	CHIP CAPACITOR	GRM40B153K50PT	C220	1
TX MAIN UNIT/160	CHIP ELECTROLYT	MVK16VC10M D55	C221	1
TX MAIN UNIT/160	CHIP ELECTROLYT	MVK16VC10M D55	C222	1
TX MAIN UNIT/160	CHIP ELECTROLYT	MVK16VC10M D55	C223	1
TX MAIN UNIT/160	CHIP ELECTROLYT	MVK16VC10M D55	C224	1
TX MAIN UNIT/160	CHIP ELECTROLYT	MVK16VC10M D55	C225	1
TX MAIN UNIT/160	CHIP CAPACITOR	GRM40B104K25PT	C226	1
TX MAIN UNIT/160	CHIP CAPACITOR	GRM40B473K25PT	C227	1
TX MAIN UNIT/160	CHIP TANTALUM	ECST1CY105R	C228	1
TX MAIN UNIT/160	CHIP TANTALUM	ECST1VY154R	C230	1
TX MAIN UNIT/160	CHIP CAPACITOR	GRM40B102K50PT	C231	1
TX MAIN UNIT/160	CHIP CAPACITOR	GRM40B103K50PT	C232	1
TX MAIN UNIT/160	CHIP CAPACITOR	GRM40B102K50PT	C233	1
TX MAIN UNIT/160	CHIP CAPACITOR	GRM40B473K25PT	C234	1
TX MAIN UNIT/160	CHIP CAPACITOR	GRM40B103K50PT	C235	1
TX MAIN UNIT/160	CHIP CAPACITOR	GRM40B471K50PT	C236	1
TX MAIN UNIT/160	CHIP CAPACITOR	GRM40B102K50PT	C237	1
TX MAIN UNIT/160	CHIP CAPACITOR	GRM40B102K50PT	C238	1
TX MAIN UNIT/160	CHIP ELECTROLYT	MVK25VC33M F55	C239	1
TX MAIN UNIT/160	CHIP CAPACITOR	GRM40CH150J50PT	C240	1
TX MAIN UNIT/160	CHIP CAPACITOR	GRM40B102K50PT	C241	1
TX MAIN UNIT/160	CHIP CAPACITOR	GRM40B102K50PT	C243	1
TX MAIN UNIT/160	CHIP CAPACITOR	GRM40CH330J50PT	C244	1
TX MAIN UNIT/160	CHIP CAPACITOR	GRM40CH330J50PT	C248	1
TX MAIN UNIT/160	CHIP CAPACITOR	GRM40CH040C50PT	C249	1
TX MAIN UNIT/160	CHIP CAPACITOR	GRM40CH100D50PT	C252	1
TX MAIN UNIT/160	CHIP CAPACITOR	GRM40B471K50PT	C253	1
TX MAIN UNIT/160	CHIP CAPACITOR	GRM40B102K50PT	C254	1

TX MAIN UNIT/160	CHIP CAPACITOR	GRM40B103K50PT	C255	1
TX MAIN UNIT/160	CHIP CAPACITOR	GRM40B223K25PT	C256	1
TX MAIN UNIT/160	CHIP TANTALUM	ECST1CY105R	C257	1
TX MAIN UNIT/160	CORD	4A-S586	CN201	1
TX MAIN UNIT/160	CONNECTOR	52030-1610	CN202	1
TX MAIN UNIT/160	CONNECTOR	LPC-6FDS	CS201	1
TX MAIN UNIT/160	CONNECTOR	LPC-2FDS	CS202	1
TX MAIN UNIT/160	CHIP ZENNER DIODE	UDZ2.4B-TE17	D201	1
TX MAIN UNIT/160	CHIP DIODE	1SS355	D202	1
TX MAIN UNIT/160	CHIP DIODE	1SS355	D205	1
TX MAIN UNIT/160	CHIP DIODE	DA204U-T106	D206	1
TX MAIN UNIT/160	CHIP DIODE	DA204U-T106	D207	1
TX MAIN UNIT/160	CHIP DIODE	1SS355	D210	1
TX MAIN UNIT/160	CHIP DIODE	RB501V-40TE-17	D211	1
TX MAIN UNIT/160	CHIP DIODE	1SS356-TW11	D212	1
TX MAIN UNIT/160	CHIP DIODE	SML210-VT-T86	D214	1
TX MAIN UNIT/160	CHIP VR	G3AT 10K	FVR201	1
TX MAIN UNIT/160	CHIP VARICAP	EVM-7JSX30B25	FVR202	1
TX MAIN UNIT/160	CHIP VARICAP	EVM-7JSX30B15	FVR203	1
TX MAIN UNIT/160	CHIP VR	G3AT 5K	FVR204	1
TX MAIN UNIT/160	CHIP COIL	#1091(R12-H510Y)	L201	1
TX MAIN UNIT/160	CHIP INDUCTOR	LQN1A47NJ04	L203	1
TX MAIN UNIT/160	TCXO(VHF)	VT50P-14	OS201	1
TX MAIN UNIT/160	SCREW SEMS	SE-3 X 6	PCB	6
TX MAIN UNIT/160	SCREW SEMS	SE-3 X 8	COVER	6
TX MAIN UNIT/160	CHIP TRANSISTOR	2SK2731-T146	Q201	1
TX MAIN UNIT/160	CHIP TRANSISTOR	FMG9A-T148	Q202	1
TX MAIN UNIT/160	CHIP TRANSISTOR	UMC2-TR	Q203	1
TX MAIN UNIT/160	CHIP TRANSISTOR	2SK3018-T106	Q204	1
TX MAIN UNIT/160	CHIP TRANSISTOR	2SD2351-T106	Q205	1
TX MAIN UNIT/160	CHIP TRANSISTOR	2SK3018-T106	Q206	1
TX MAIN UNIT/160	CHIP TRANSISTOR	2SJ-166-T1B	Q207	1
TX MAIN UNIT/160	CHIP TRANSISTOR	2SK3018-T106	Q208	1
TX MAIN UNIT/160	CHIP TRANSISTOR	UMC2-TR	Q209	1
TX MAIN UNIT/160	CHIP TRANSISTOR	FMG2A-T148	Q210	1
TX MAIN UNIT/160	CHIP TRANSISTOR	FMG2A-T148	Q211	1
TX MAIN UNIT/160	CHIP TRANSISTOR	2SB1184TL	Q212	1
TX MAIN UNIT/160	CHIP TRANSISTOR	IMX1-T110	Q214	1
TX MAIN UNIT/160	CHIP TRANSISTOR	2SC2954-T1	Q215	1
TX MAIN UNIT/160	CHIP RESISTOR	MCR10EZHJ103	R201	1
TX MAIN UNIT/160	CHIP RESISTOR	MCR10EZHJ103	R202	1
TX MAIN UNIT/160	CHIP RESISTOR	MCR10EZHJ103	R203	1
TX MAIN UNIT/160	CHIP RESISTOR	MCR10EZHJ683	R204	1
TX MAIN UNIT/160	CHIP RESISTOR	MCR10EZHJ153	R205	1
TX MAIN UNIT/160	CHIP RESISTOR	MCR10EZHJ472	R206	1
TX MAIN UNIT/160	CHIP RESISTOR	MCR10EZHJ103	R207	1
TX MAIN UNIT/160	CHIP RESISTOR	MCR10EZHJ104	R209	1
TX MAIN UNIT/160	CHIP RESISTOR	MCR10EZHJ104	R210	1
TX MAIN UNIT/160	CHIP RESISTOR	MCR10EZHJ184	R211	1
TX MAIN UNIT/160	CHIP RESISTOR	MCR10EZHJ153	R212	1
TX MAIN UNIT/160	CHIP RESISTOR	MCR10EZHJ752	R213	1
TX MAIN UNIT/160	CHIP RESISTOR	MCR10EZHJ682	R214	1
TX MAIN UNIT/160	CHIP RESISTOR	MCR10EZHJ103	R215	1
TX MAIN UNIT/160	CHIP RESISTOR	MCR10EZHJ103	R216	1
TX MAIN UNIT/160	CHIP RESISTOR	MCR10EZHJ103	R217	1
TX MAIN UNIT/160	CHIP RESISTOR	MCR10EZHJ103	R219	1
TX MAIN UNIT/160	CHIP RESISTOR	MCR10EZHJ104	R221	1
TX MAIN UNIT/160	CHIP RESISTOR	MCR10EZHJ101	R222	1
TX MAIN UNIT/160	CHIP RESISTOR	MCR10EZHJ472	R223	1
TX MAIN UNIT/160	CHIP RESISTOR	MCR10EZHJ103	R224	1
TX MAIN UNIT/160	CHIP RESISTOR	MCR10EZHJ102	R225	1
TX MAIN UNIT/160	CHIP RESISTOR	MCR10EZHJ103	R226	1
TX MAIN UNIT/160	CHIP RESISTOR	MCR10EZHJ273	R227	1

TX MAIN UNIT/160	CHIP RESISTOR	MCR10EZHJ183	R228	1
TX MAIN UNIT/160	CHIP RESISTOR	MCR10EZHJ470	R229	1
TX MAIN UNIT/160	CHIP RESISTOR	MCR10EZHJ470	R230	1
TX MAIN UNIT/160	CHIP RESISTOR	MCR10EZHJ393	R231	1
TX MAIN UNIT/160	CHIP RESISTOR	MCR10EZHJ102	R232	1
TX MAIN UNIT/160	CHIP RESISTOR	MCR10EZHJ681	R233	1
TX MAIN UNIT/160	CHIP RESISTOR	MCR10EZHJ272	R234	1
TX MAIN UNIT/160	CHIP RESISTOR	MCR10EZHJ473	R236	1
TX MAIN UNIT/160	CHIP RESISTOR	MCR10EZHJ152	R237	1
TX MAIN UNIT/160	CHIP RESISTOR	MCR10EZHJ271	R239	1
TX MAIN UNIT/160	CHIP RESISTOR	MCR18EZHJ471	R240	1
TX MAIN UNIT/160	CHIP RESISTOR	MCR10EZHJ103	R241	1
TX MAIN UNIT/160	CHIP RESISTOR	MCR10EZHJ103	R243	1
TX MAIN UNIT/160	CHIP RESISTOR	MCR10EZHJ473	R244	1
TX MAIN UNIT/160	CHIP RESISTOR	MCR10EZHJ153	R246	1
TX MAIN UNIT/160	CHIP RESISTOR	MCR10EZHJ104	R247	1
TX MAIN UNIT/160	CHIP RESISTOR	MCR10EZHJ000	R248	1
TX MAIN UNIT/160	CHIP RESISTOR	MCR10EZHJ473	R249	1
TX MAIN UNIT/160	CHIP RESISTOR	MCR10EZHJ184	R250	1
TX MAIN UNIT/160	CHIP RESISTOR	MCR10EZHJ152	R251	1
TX MAIN UNIT/160	CHIP RESISTOR	MCR10EZHJ471	R252	1
TX MAIN UNIT/160	CHIP RESISTOR	MCR10EZHJ104	R253	1
TX MAIN UNIT/160	CHIP RESISTOR	MCR10EZHJ473	R254	1
TX MAIN UNIT/160	CHIP RESISTOR	MCR10EZHJ473	R255	1
TX MAIN UNIT/160	CHIP RESISTOR	MCR10EZHJ104	R256	1
TX MAIN UNIT/160	CHIP RESISTOR	MCR10EZHJ473	R257	1
TX MAIN UNIT/160	CHIP RESISTOR	MCR10EZHJ154	R259	1
TX MAIN UNIT/160	CHIP RESISTOR	MCR10EZHJ822	R260	1
TX MAIN UNIT/160	CHIP RESISTOR	MCR10EZHJ103	R261	1
TX MAIN UNIT/160	CHIP RESISTOR	MCR10EZHJ103	R262	1
TX MAIN UNIT/160	CHIP RESISTOR	MCR10EZHJ393	R263	1
TX MAIN UNIT/160	CHIP RESISTOR	MCR10EZHJ100	R264	1
TX MAIN UNIT/160	CHIP RESISTOR	MCR10EZHJ271	R265	1
TX MAIN UNIT/160	CHIP RESISTOR	MCR10EZHJ151	R266	1
TX MAIN UNIT/160	CHIP RESISTOR	MCR10EZHJ4R7	R267	1
TX MAIN UNIT/160	CHIP RESISTOR	MCR10EZHJ472	R268	1
TX MAIN UNIT/160	CHIP RESISTOR	MCR10EZHJ4R7	R269	1
TX MAIN UNIT/160	CHIP RESISTOR	MCR10EZHJ471	R270	1
TX MAIN UNIT/160	CHIP RESISTOR	MCR18EZHJ100	R271	1
TX MAIN UNIT/160	CHIP RESISTOR	MCR18EZHJ000	R272	1
TX MAIN UNIT/160	CHIP RESISTOR	MCR10EZHJ2R2	R274	1
TX MAIN UNIT/160	CHIP RESISTOR	MCR10EZHJ103	R277	1
TX MAIN UNIT/160	CHIP RESISTOR	MCR10EZHJ182	R278	1
TX MAIN UNIT/160	CHIP RESISTOR	MCR18EZHJ471	R279	1
TX MAIN UNIT/160	CHIP RESISTOR	MCR10EZHJ182	R280	1
TX MAIN UNIT/160	BOSS	4A10-3000		2
TX MAIN UNIT/160	P.C.B.	51TXU86-4□1/2□		1
TX MAIN UNIT/160	SPRING	4A10-2200		2
TX MAIN UNIT/160	TX COVER	4A10-3037		1
TX MAIN UNIT/160	TX SEAL	4A10-3039		1
TX MAIN UNIT/160	TX/RX FRAME	2A10-0210		1
TX VCO UNIT/160	CHIP IC	UPC1688G-T1	IC301	1
TX VCO UNIT/160	CHIP COIL	FBMH3216HM501NT	BL301	1
TX VCO UNIT/160	CHIP COIL	BLM21B421SPT	BL302	1
TX VCO UNIT/160	CHIP CAPACITOR	GRM40B823K25PT	C302	1
TX VCO UNIT/160	CHIP CAPACITOR	GRM40CH150J50PT	C303	1
TX VCO UNIT/160	CHIP CAPACITOR	GRM39CK0R3C50PT	C304	1
TX VCO UNIT/160	CHIP CAPACITOR	GRM40CH151J50PT	C305	1
TX VCO UNIT/160	CHIP CAPACITOR	GRM39CK010C50PT	C306	1
TX VCO UNIT/160	CHIP CAPACITOR	GRM40CH180J50PT	C307	1
TX VCO UNIT/160	CHIP CAPACITOR	GRM40CH150J50PT	C308	1
TX VCO UNIT/160	CHIP CAPACITOR	GRM40CH080D50PT	C309	1
TX VCO UNIT/160	CHIP CAPACITOR	GRM40CH080D50PT	C310	1

TX VCO UNIT/160	CHIP CAPACITOR	GRM40CK2R5C50PT	C311	1
TX VCO UNIT/160	CHIP CAPACITOR	GRM40B102K50PT	C312	1
TX VCO UNIT/160	CHIP CAPACITOR	GRM40B102K50PT	C313	1
TX VCO UNIT/160	CHIP CAPACITOR	GRM40CH150J50PT	C314	1
TX VCO UNIT/160	CHIP CAPACITOR	GRM40CJ030C50PT	C315	1
TX VCO UNIT/160	CHIP CAPACITOR	GRM40CH100D50PT	C316	1
TX VCO UNIT/160	CHIP CAPACITOR	GRM40B102K50PT	C317	1
TX VCO UNIT/160	CHIP ELECTROLYT	MVK16VC10M D55	C318	1
TX VCO UNIT/160	CHIP ELECTROLYT	MVK16VC10M D55	C319	1
TX VCO UNIT/160	CHIP CAPACITOR	GRM40B102K50PT	C320	1
TX VCO UNIT/160	CHIP CAPACITOR	GRM40CH220J50PT	C321	1
TX VCO UNIT/160	CHIP CAPACITOR	GRM40B471K50PT	C322	1
TX VCO UNIT/160	CHIP CAPACITOR	GRM40B102K50PT	C323	1
TX VCO UNIT/160	CHIP ELECTROLYT	MVK16VC10M D55	C324	1
TX VCO UNIT/160	CHIP CAPACITOR	GRM40B102K50PT	C325	1
TX VCO UNIT/160	CHIP CAPACITOR	GRM40B471K50PT	C326	1
TX VCO UNIT/160	CONNECTOR	LPC-6T7M	CP301	1
TX VCO UNIT/160	CONNECTOR	LPC-2T7M	CP302	1
TX VCO UNIT/160	CHIP DIODE	1SV229-TPH3	D301	1
TX VCO UNIT/160	CHIP DIODE	1SV229-TPH3	D302	1
TX VCO UNIT/160	CHIP DIODE	1SV231-TPH3	D303	1
TX VCO UNIT/160	CHIP DIODE	SV231-TPH3	D304	1
TX VCO UNIT/160	CHIP DIODE	1SS355	D307	1
TX VCO UNIT/160	CHIP DIODE	1SS356-TW11	D308	1
TX VCO UNIT/160	CHIP ZENNER DIODE	UDZ2.0B-TE17	D309	1
TX VCO UNIT/160	CHIP ZENNER DIODE	UDZ2.0B-TE17	D310	1
TX VCO UNIT/160	CHIP INDUCTOR	ELJ-FC1R0KF	L301	1
TX VCO UNIT/160	CHIP COIL	KQ1008TE1R0K	L302	1
TX VCO UNIT/160	CHIP COIL	#3073	L303	1
TX VCO UNIT/160	CHIP COIL	KQ1008TE1R0K	L304	1
TX VCO UNIT/160	CHIP INDUCTOR	ELJ-FC1R0KF	L305	1
TX VCO UNIT/160	CHIP COIL	LL2012-F68NK	L306	1
TX VCO UNIT/160	CHIP RESISTOR	MCR10EZHJ150	L307	1
TX VCO UNIT/160	CHIP COIL	#1092(R12-H693Y)	L308	1
TX VCO UNIT/160	CHIP FET	2SK508-T1B-K53	Q301	1
TX VCO UNIT/160	CHIP TRANSISTOR	2SC4250-TE85R	Q302	1
TX VCO UNIT/160	CHIP TRANSISTOR	2SC3583-T1B-R34	Q303	1
TX VCO UNIT/160	CHIP TRANSISTOR	DTA124EKA-T107	Q304	1
TX VCO UNIT/160	CHIP TRANSISTOR	2SD2351-T106	Q305	1
TX VCO UNIT/160	CHIP TRANSISTOR	DTA124EKA-T107	Q306	1
TX VCO UNIT/160	CHIP RESISTOR	MCR10EZHJ473	R301	1
TX VCO UNIT/160	CHIP RESISTOR	MCR10EZHJ473	R302	1
TX VCO UNIT/160	CHIP RESISTOR	MCR10EZHJ224	R303	1
TX VCO UNIT/160	CHIP DIODE	1SV231-TPH3	R305	1
TX VCO UNIT/160	CHIP RESISTOR	MCR10EZHJ150	R306	1
TX VCO UNIT/160	CHIP RESISTOR	MCR10EZHJ221	R307	1
TX VCO UNIT/160	CHIP RESISTOR	MCR10EZHJ472	R308	1
TX VCO UNIT/160	CHIP RESISTOR	MCR10EZHJ472	R309	1
TX VCO UNIT/160	CHIP RESISTOR	MCR10EZHJ471	R310	1
TX VCO UNIT/160	CHIP RESISTOR	MCR10EZHJ471	R311	1
TX VCO UNIT/160	CHIP RESISTOR	MCR10EZHJ101	R312	1
TX VCO UNIT/160	CHIP RESISTOR	MCR10EZHJ103	R313	1
TX VCO UNIT/160	CHIP RESISTOR	MCR10EZHJ222	R314	1
TX VCO UNIT/160	CHIP RESISTOR	MCR10EZHJ472	R315	1
TX VCO UNIT/160	CHIP RESISTOR	MCR10EZHJ332	R316	1
TX VCO UNIT/160	CHIP RESISTOR	MCR10EZHJ102	R317	1
TX VCO UNIT/160	CHIP RESISTOR	MCR10EZHJ560	R318	1
TX VCO UNIT/160	CHIP RESISTOR	MCR10EZHJ4R7	R319	1
TX VCO UNIT/160	CHIP RESISTOR	MCR10EZHJ821	R320	1
TX VCO UNIT/160	CHIP RESISTOR	MCR10EZHJ150	R321	1
TX VCO UNIT/160	CHIP CAPACITOR	GRM40B102K50PT	R322	1
TX VCO UNIT/160	CHIP RESISTOR	MCR10EZHJ101	R323	1
TX VCO UNIT/160	CHIP RESISTOR	MCR10EZHJ473	R324	1

TX VCO UNIT/160	CHIP RESISTOR	MCR10EZHJ154	R325	1
TX VCO UNIT/160	CHIP CHECKER	RCT	TP301	1
TX VCO UNIT/160	P.C.B.	51VCU86-1□1/4□		1
TX VCO UNIT/160	VCO COVER	4A10-2170		1
TX VCO UNIT/160	VCO SHIELD	4A10-3029		1
TX VCO UNIT/160	VCO SHIELD CASE	4A10-2169		1
BPF UNIT-1/160	CHIP CAPACITOR	GRM39CH080D50PT	C1	1
BPF UNIT-1/160	CHIP CAPACITOR	GRM39CK0R5C50PT	C2	1
BPF UNIT-1/160	CHIP CAPACITOR	GRM39CK0R5C50PT	C3	1
BPF UNIT-1/160	CHIP CAPACITOR	GRM39CK0R5C50PT	C4	1
BPF UNIT-1/160	CHIP CAPACITOR	GRM39CH080D50PT	C5	1
BPF UNIT-1/160	CHIP CAPACITOR	GRM39CK0R3C50PT	C6	1
BPF UNIT-1/160	CHIP CAPACITOR	GRM39CK0R5C50PT	C9	1
BPF UNIT-1/160	CHIP CAPACITOR	GRM39CH080D50PT	C10	1
BPF UNIT-1/160	P.C.B.	51BPF-V(1/20□		1
BPF UNIT-1/160	COIL	#1501	L1	1
BPF UNIT-1/160	COIL	#1503	L2	1
BPF UNIT-1/160	COIL	#1503	L3	1
BPF UNIT-1/160	BPF CAVITY	4A10-1378		3
BPF UNIT-1/160	BPF BOTTOM	3A10-0576		1
BPF UNIT-2/160	CHIP CAPACITOR	GRM39CH080D50PT	C1	1
BPF UNIT-2/160	CHIP CAPACITOR	GRM39CKR75C50PT	C2	1
BPF UNIT-2/160	CHIP CAPACITOR	GRM39CH080D50PT	C5	1
BPF UNIT-2/160	CHIP CAPACITOR	GRM39CK0R5C50PT	C6	1
BPF UNIT-2/160	CHIP CAPACITOR	GRM39CK010C50PT	C7	1
BPF UNIT-2/160	CHIP CAPACITOR	GRM39CK010C50PT	C8	1
BPF UNIT-2/160	CHIP CAPACITOR	GRM39CK0R3C50PT	C9	1
BPF UNIT-2/160	CHIP CAPACITOR	GRM39CH080D50PT	C10	1
BPF UNIT-2/160	P.C.B.	51BPF-V(1/20□		1
BPF UNIT-2/160	COIL	#1501	L1	1
BPF UNIT-2/160	COIL	#1503	L2	1
BPF UNIT-2/160	COIL	#1503	L3	1
BPF UNIT-2/160	BPF CAVITY	4A10-1378		3
BPF UNIT-2/160	BPF BOTTOM	3A10-0576		1
RX MAIN UNIT/160	CHIP IC	MB1511PFV-G-BND-EF	IC101	1
RX MAIN UNIT/160	CHIP IC	NJU7662M-T1	IC102	1
RX MAIN UNIT/160	CHIP IC	BU4S66-TR	IC103	1
RX MAIN UNIT/160	CHIP IC	AN78L05M	IC104	1
RX MAIN UNIT/160	CHIP IC	TA75S01F-TE85R	IC105	1
RX MAIN UNIT/160	CHIP IC	TA75S558F-TE85R	IC107	1
RX MAIN UNIT/160	CHIP IC	TA78M05F-TE16L	IC108	1
RX MAIN UNIT/160	CHIP COIL	FBMH3216HM501NT	BL101	1
RX MAIN UNIT/160	CHIP COIL	BLM21B421SPT	BL102	1
RX MAIN UNIT/160	CHIP COIL	BLM21B421SPT	BL103	1
RX MAIN UNIT/160	CHIP COIL	FBMH3216HM501NT	BL104	1
RX MAIN UNIT/160	BPF SPRING	4A10-3041	BPF	2
RX MAIN UNIT/160	SCREW BIND	BD-2 X 6	BPF	4
RX MAIN UNIT/160	CHIP CAPACITOR	GRM40CH070D50PT	C101	1
RX MAIN UNIT/160	CHIP CAPACITOR	GRM40CH070D50PT	C103	1
RX MAIN UNIT/160	CHIP CAPACITOR	GRM40B471K50PT	C104	1
RX MAIN UNIT/160	CHIP CAPACITOR	GRM40B102K50PT	C106	1
RX MAIN UNIT/160	CHIP CAPACITOR	GRM40B472K50PT	C107	1
RX MAIN UNIT/160	CHIP CAPACITOR	GRM40B102K50PT	C108	1
RX MAIN UNIT/160	CHIP CAPACITOR	GRM40B102K50PT	C109	1
RX MAIN UNIT/160	CHIP CAPACITOR	GRM40CH101J50PT	C110	1
RX MAIN UNIT/160	CHIP CAPACITOR	GRM40B471K50PT	C111	1
RX MAIN UNIT/160	CHIP CAPACITOR	GRM40B102K50PT	C112	1
RX MAIN UNIT/160	CHIP CAPACITOR	GRM40B102K50PT	C115	1
RX MAIN UNIT/160	CHIP CAPACITOR	GRM40B472K50PT	C116	1
RX MAIN UNIT/160	CHIP CAPACITOR	GRM40B102K50PT	C117	1
RX MAIN UNIT/160	CHIP CAPACITOR	GRM40B102K50PT	C118	1
RX MAIN UNIT/160	CHIP CAPACITOR	GRM40CH101J50PT	C119	1
RX MAIN UNIT/160	CHIP CAPACITOR	GRM40B471K50PT	C120	1

RX MAIN UNIT/160	CHIP CAPACITOR	GRM40B102K50PT	C121	1
RX MAIN UNIT/160	CHIP CAPACITOR	GRM40CH100D50PT	C122	1
RX MAIN UNIT/160	CHIP CAPACITOR	GRM40CK1R5C50PT	C124	1
RX MAIN UNIT/160	CHIP CAPACITOR	GRM40CH101J50PT	C125	1
RX MAIN UNIT/160	CHIP CAPACITOR	GRM40CH220J50PT	C126	1
RX MAIN UNIT/160	CHIP CAPACITOR	GRM40CH200J50PT	C127	1
RX MAIN UNIT/160	CHIP CAPACITOR	GRM40B102K50PT	C128	1
RX MAIN UNIT/160	CHIP CAPACITOR	GRM40B102K50PT	C129	1
RX MAIN UNIT/160	CHIP CAPACITOR	GRM40CH330J50PT	C130	1
RX MAIN UNIT/160	CHIP TANTALUM	ECST1CY105R	C131	1
RX MAIN UNIT/160	CHIP CAPACITOR	GRM40CH050C50PT	C132	1
RX MAIN UNIT/160	CHIP CAPACITOR	GRM40B102K50PT	C133	1
RX MAIN UNIT/160	CHIP CAPACITOR	GRM40B473K25PT	C134	1
RX MAIN UNIT/160	CHIP CAPACITOR	GRM40CH040C50PT	C135	1
RX MAIN UNIT/160	CHIP CAPACITOR	GRM40B473K25PT	C137	1
RX MAIN UNIT/160	CHIP TANTALUM	ECST1AY475R	C138	1
RX MAIN UNIT/160	CHIP ELECTROLYT	MVK16VC10M D55	C139	1
RX MAIN UNIT/160	CHIP CAPACITOR	CGRM40B473K25PT	C140	1
RX MAIN UNIT/160	CHIP TANTALUM	ECST1VY224R	C141	1
RX MAIN UNIT/160	CHIP CAPACITOR	GRM40CH151J50PT	C142	1
RX MAIN UNIT/160	CHIP CAPACITOR	GRM40CH070D50PT	C143	1
RX MAIN UNIT/160	CHIP ELECTROLYT	MVK16VC10M D55	C145	1
RX MAIN UNIT/160	CHIP ELECTROLYT	MVK16VC10M D55	C146	1
RX MAIN UNIT/160	CHIP ELECTROLYT	MVK16VC10M D55	C147	1
RX MAIN UNIT/160	CHIP ELECTROLYT	MVK16VC10M D55	C148	1
RX MAIN UNIT/160	CHIP ELECTROLYT	MVK16VC10M D55	C149	1
RX MAIN UNIT/160	CHIP CAPACITOR	GRM40B153K50PT	C150	1
RX MAIN UNIT/160	CHIP TANTALUM	ECST1CY105R	C151	1
RX MAIN UNIT/160	CHIP CAPACITOR	GRM40B473K25PT	C152	1
RX MAIN UNIT/160	CHIP CAPACITOR	GRM40B104K25PT	C153	1
RX MAIN UNIT/160	CHIP TANTALUM	ECST1CY105R	C155	1
RX MAIN UNIT/160	CHIP ELECTROLYT	MVK16VC10M D55	C156	1
RX MAIN UNIT/160	CHIP TANTALUM	ECST1CY225R	C157	1
RX MAIN UNIT/160	CHIP CAPACITOR	GRM40B153K50PT	C166	1
RX MAIN UNIT/160	CHIP CAPACITOR	GRM40B153K50PT	C187	1
RX MAIN UNIT/160	CHIP CAPACITOR	GRM40B103K50PT	C188	1
RX MAIN UNIT/160	CHIP CAPACITOR	GRM40B222K50PT	C189	1
RX MAIN UNIT/160	CORD	4A-S587	CN101	1
RX MAIN UNIT/160	CONNECTOR	52030-1610	CN202	1
RX MAIN UNIT/160	CONNECTOR	LPC-6FDS	CS101	1
RX MAIN UNIT/160	CONNECTOR	LPC-2FDS	CS102	1
RX MAIN UNIT/160	CONNECTOR	LPC-2FDS	CS103	1
RX MAIN UNIT/160	CONNECTOR	LPC-6FDS	CS104	1
RX MAIN UNIT/160	CHIP DIODE	HVU131TRF	D101	1
RX MAIN UNIT/160	CHIP DIODE	HVU131TRF	D102	1
RX MAIN UNIT/160	CHIP DIODE	HVU131TRF	D103	1
RX MAIN UNIT/160	CHIP DIODE	1SS271-TE85R	D107	1
RX MAIN UNIT/160	CHIP DIODE	1SS271-TE85R	D108	1
RX MAIN UNIT/160	CHIP DIODE	RB501V-40TE-17	D109	1
RX MAIN UNIT/160	CHIP DIODE	1SS355	D110	1
RX MAIN UNIT/160	CHIP DIODE	1SS355	D111	1
RX MAIN UNIT/160	CHIP DIODE	DA204U-T106	D112	1
RX MAIN UNIT/160	CHIP DIODE	DA204U-T106	D113	1
RX MAIN UNIT/160	CHIP DIODE	1SS355	D114	1
RX MAIN UNIT/160	CHIP ZENNER DIODE	UDZ2.4B-TE17	D118	1
RX MAIN UNIT/160	CHIP DIODE	SML210-VT-T86	D119	1
RX MAIN UNIT/160	SPRING	4A10-2200	GNB	3
RX MAIN UNIT/160	JUMPER PLUG	DIC-149-3P	J101	1
RX MAIN UNIT/160	JUMPER SOCKET	DIC-128	JS	1
RX MAIN UNIT/160	CHIP INDUCTOR	LQN1A47NJ04	L101	1
RX MAIN UNIT/160	CHIP COIL	LL2012-F68NK	L102	1
RX MAIN UNIT/160	CHIP INDUCTOR	ELJ-NCR33KF	L103	1
RX MAIN UNIT/160	CHIP RESISTOR	MCR10EZHJ000	L104	1

RX MAIN UNIT/160	CHIP INDUCTOR	ELJ-NCR33KF	L106	1
RX MAIN UNIT/160	CHIP RESISTOR	MCR10EZHJ000	L107	1
RX MAIN UNIT/160	CHIP RESISTOR	MCR10EZHJ100	L108	1
RX MAIN UNIT/160	CHIP INDUCTOR	LQN1AR10J04	L109	1
RX MAIN UNIT/160	CHIP INDUCTOR	NL322522TR56J	L110	1
RX MAIN UNIT/160	CHIP INDUCTOR	ELJ-FC4R7KF	L111	1
RX MAIN UNIT/160	CHIP INDUCTOR	NL322522TR68J	L112	1
RX MAIN UNIT/160	CHIP RESISTOR	MCR10EZHJ270	L113	1
RX MAIN UNIT/160	CHIP INDUCTOR	ELJ-FC1R0MF	L114	1
RX MAIN UNIT/160	TCXO(VHF)	VT50P-14	OS101	1
RX MAIN UNIT/160	SCREW SEMS	SE-3 X 6	PCB	6
RX MAIN UNIT/160	SCREW SEMS	SE-3 X 8	COVER	6
RX MAIN UNIT/160	CHIP TRANSISTOR	3SK177-T1-U72	Q101	1
RX MAIN UNIT/160	CHIP FET	2SK508-T1B-K53	Q103	1
RX MAIN UNIT/160	CHIP TRANSISTOR	DTB143EK-T146	Q104	1
RX MAIN UNIT/160	CHIP TRANSISTOR	2SD2351-T106	Q107	1
RX MAIN UNIT/160	CHIP TRANSISTOR	2SJ-166-T1B	Q108	1
RX MAIN UNIT/160	CHIP TRANSISTOR	2SK3018-T106	Q109	1
RX MAIN UNIT/160	CHIP TRANSISTOR	2SK3018-T106	Q110	1
RX MAIN UNIT/160	CHIP TRANSISTOR	UMC2-TR	Q111	1
RX MAIN UNIT/160	CHIP TRANSISTOR	UMC2-TR	Q112	1
RX MAIN UNIT/160	CHIP TRANSISTOR	DTA144EUA-T106	Q117	1
RX MAIN UNIT/160	CHIP TRANSISTOR	DTB143EK-T146	Q118	1
RX MAIN UNIT/160	CHIP TRANSISTOR	DTC114EKA-T146	Q119	1
RX MAIN UNIT/160	CHIP TRANSISTOR	2SK3018-T106	Q120	1
RX MAIN UNIT/160	CHIP RESISTOR	MCR10EZHJ103	R101	1
RX MAIN UNIT/160	CHIP RESISTOR	MCR10EZHJ821	R102	1
RX MAIN UNIT/160	CHIP RESISTOR	MCR10EZHJ272	R103	1
RX MAIN UNIT/160	CHIP RESISTOR	MCR10EZHJ103	R104	1
RX MAIN UNIT/160	CHIP RESISTOR	MCR10EZHJ223	R105	1
RX MAIN UNIT/160	CHIP RESISTOR	MCR10EZHJ121	R106	1
RX MAIN UNIT/160	CHIP RESISTOR	MCR10EZHJ332	R107	1
RX MAIN UNIT/160	CHIP RESISTOR	MCR10EZHJ470	R108	1
RX MAIN UNIT/160	CHIP RESISTOR	MCR10EZHJ000	R110	1
RX MAIN UNIT/160	CHIP RESISTOR	MCR10EZHJ821	R111	1
RX MAIN UNIT/160	CHIP RESISTOR	MCR10EZHJ272	R112	1
RX MAIN UNIT/160	CHIP RESISTOR	MCR10EZHJ103	R113	1
RX MAIN UNIT/160	CHIP RESISTOR	MCR10EZHJ223	R114	1
RX MAIN UNIT/160	CHIP RESISTOR	MCR10EZHJ121	R115	1
RX MAIN UNIT/160	CHIP RESISTOR	MCR10EZHJ332	R116	1
RX MAIN UNIT/160	CHIP RESISTOR	MCR10EZHJ470	R117	1
RX MAIN UNIT/160	CHIP RESISTOR	MCR10EZHJ821	R118	1
RX MAIN UNIT/160	CHIP RESISTOR	MCR10EZHJ151	R119	1
RX MAIN UNIT/160	CHIP RESISTOR	MCR10EZHJ101	R120	1
RX MAIN UNIT/160	CHIP RESISTOR	MCR10EZHJ560	R121	1
RX MAIN UNIT/160	CHIP RESISTOR	MCR10EZHJ103	R122	1
RX MAIN UNIT/160	CHIP RESISTOR	MCR10EZHJ101	R123	1
RX MAIN UNIT/160	CHIP RESISTOR	MCR10EZHJ822	R124	1
RX MAIN UNIT/160	CHIP RESISTOR	MCR10EZHJ104	R125	1
RX MAIN UNIT/160	CHIP RESISTOR	MCR10EZHJ393	R126	1
RX MAIN UNIT/160	CHIP RESISTOR	MCR10EZHJ104	R127	1
RX MAIN UNIT/160	CHIP RESISTOR	MCR10EZHJ682	R128	1
RX MAIN UNIT/160	CHIP RESISTOR	MCR10EZHJ473	R129	1
RX MAIN UNIT/160	CHIP RESISTOR	MCR10EZHJ104	R130	1
RX MAIN UNIT/160	CHIP RESISTOR	MCR10EZHJ470	R131	1
RX MAIN UNIT/160	CHIP RESISTOR	MCR10EZHJ103	R132	1
RX MAIN UNIT/160	CHIP RESISTOR	MCR10EZHJ103	R133	1
RX MAIN UNIT/160	CHIP RESISTOR	MCR10EZHJ103	R134	1
RX MAIN UNIT/160	CHIP RESISTOR	MCR10EZHJ470	R135	1
RX MAIN UNIT/160	CHIP RESISTOR	MCR10EZHJ682	R136	1
RX MAIN UNIT/160	CHIP RESISTOR	MCR10EZHJ103	R137	1
RX MAIN UNIT/160	CHIP RESISTOR	MCR10EZHJ103	R138	1
RX MAIN UNIT/160	CHIP RESISTOR	MCR10EZHJ103	R139	1

RX MAIN UNIT/160	CHIP RESISTOR	MCR10EZHJ682	R140	1
RX MAIN UNIT/160	CHIP RESISTOR	MCR10EZHJ472	R141	1
RX MAIN UNIT/160	CHIP RESISTOR	MCR10EZHJ273	R144	1
RX MAIN UNIT/160	CHIP RESISTOR	MCR10EZHJ183	R145	1
RX MAIN UNIT/160	CHIP RESISTOR	MCR10EZHJ472	R146	1
RX MAIN UNIT/160	CHIP RESISTOR	MCR10EZHJ101	R148	1
RX MAIN UNIT/160	CHIP RESISTOR	MCR10EZHJ104	R149	1
RX MAIN UNIT/160	CHIP RESISTOR	MCR10EZHJ470	R150	1
RX MAIN UNIT/160	CHIP RESISTOR	MCR10EZHJ470	R151	1
RX MAIN UNIT/160	CHIP RESISTOR	MCR10EZHJ393	R152	1
RX MAIN UNIT/160	CHIP RESISTOR	MCR10EZHJ102	R153	1
RX MAIN UNIT/160	CHIP RESISTOR	MCR10EZHJ821	R154	1
RX MAIN UNIT/160	CHIP RESISTOR	MCR10EZHJ272	R155	1
RX MAIN UNIT/160	CHIP RESISTOR	MCR10EZHJ473	R157	1
RX MAIN UNIT/160	CHIP RESISTOR	MCR10EZHJ471	R158	1
RX MAIN UNIT/160	CHIP RESISTOR	MCR10EZHJ104	R183	1
RX MAIN UNIT/160	CHIP RESISTOR	MCR10EZHJ103	R184	1
RX MAIN UNIT/160	CHIP RESISTOR	MCR10EZHJ473	R185	1
RX MAIN UNIT/160	CHIP RESISTOR	MCR10EZHJ472	R186	1
RX MAIN UNIT/160	CHIP RESISTOR	MCR10EZHJ103	R187	1
RX MAIN UNIT/160	CHIP RESISTOR	MCR10EZHJ104	R188	1
RX MAIN UNIT/160	CHIP RESISTOR	MCR10EZHJ332	R189	1
RX MAIN UNIT/160	CHIP COIL	#3060	T101	1
RX MAIN UNIT/160	CHIP COIL	#3060	T102	1
RX MAIN UNIT/160	COIL	M7-T1(31302)	T103	1
RX MAIN UNIT/160	CRYSTAL FILTER	48S15A	XF101	1
RX MAIN UNIT/160	BOSS	4A10-3000		2
RX MAIN UNIT/160	MIX SHIELD CASE	4A10-2171		1
RX MAIN UNIT/160	P.C.B.	51RXU86-3□1/2□		1
RX MAIN UNIT/160	RX COVER	4A10-2994		1
RX MAIN UNIT/160	RX SEAL	4A10-3040		1
RX MAIN UNIT/160	TX/RX FRAME	2A10-0210		1
RX VCO UNIT/160	CHIP IC	UPC1688G-T1	IC301	1
RX VCO UNIT/160	CHIP COIL	FBMH3216HM501NT	BL301	1
RX VCO UNIT/160	CHIP COIL	BLM21B421SPT	BL302	1
RX VCO UNIT/160	CHIP CAPACITOR	GRM40B823K25PT	C302	1
RX VCO UNIT/160	CHIP CAPACITOR	GRM40CH150J50PT	C303	1
RX VCO UNIT/160	CHIP CAPACITOR	GRM40CH181J50PT	C305	1
RX VCO UNIT/160	CHIP CAPACITOR	GRM40CH100D50PT	C307	1
RX VCO UNIT/160	CHIP CAPACITOR	GRM40CH150J50PT	C308	1
RX VCO UNIT/160	CHIP CAPACITOR	GRM40CH050C50PT	C309	1
RX VCO UNIT/160	CHIP CAPACITOR	GRM40CH050C50PT	C310	1
RX VCO UNIT/160	CHIP CAPACITOR	GRM40CK010C50PT	C311	1
RX VCO UNIT/160	CHIP CAPACITOR	GRM40B102K50PT	C312	1
RX VCO UNIT/160	CHIP CAPACITOR	GRM40B102K50PT	C313	1
RX VCO UNIT/160	CHIP CAPACITOR	GRM40CH150J50PT	C314	1
RX VCO UNIT/160	CHIP CAPACITOR	GRM40CJ030C50PT	C315	1
RX VCO UNIT/160	CHIP CAPACITOR	GRM40CH100D50PT	C316	1
RX VCO UNIT/160	CHIP CAPACITOR	GRM40B102K50PT	C317	1
RX VCO UNIT/160	CHIP ELECTROLYT	MVK16VC10M D55	C318	1
RX VCO UNIT/160	CHIP ELECTROLYT	MVK16VC10M D55	C319	1
RX VCO UNIT/160	CHIP CAPACITOR	GRM40B102K50PT	C320	1
RX VCO UNIT/160	CHIP CAPACITOR	GRM40CH220J50PT	C321	1
RX VCO UNIT/160	CHIP CAPACITOR	GRM40B471K50PT	C322	1
RX VCO UNIT/160	CHIP CAPACITOR	GRM40B102K50PT	C323	1
RX VCO UNIT/160	CHIP ELECTROLYT	MVK16VC10M D55	C324	1
RX VCO UNIT/160	CHIP CAPACITOR	GRM40B102K50PT	C325	1
RX VCO UNIT/160	CHIP CAPACITOR	GRM40B471K50PT	C326	1
RX VCO UNIT/160	CONNECTOR	LPC-6T7M	CP301	1
RX VCO UNIT/160	CONNECTOR	LPC-2T7M	CP302	1
RX VCO UNIT/160	CHIP DIODE	1SV231-TPH3	D303	1
RX VCO UNIT/160	CHIP DIODE	1SV231-TPH3	D304	1
RX VCO UNIT/160	CHIP DIODE	1SS355	D307	1

RX VCO UNIT/160	CHIP DIODE	1SS356-TW11	D308	1
RX VCO UNIT/160	CHIP ZENNER DIODE	UDZ2.0B-TE17	D309	1
RX VCO UNIT/160	CHIP ZENNER DIODE	UDZ2.0B-TE17	D310	1
RX VCO UNIT/160	CHIP INDUCTOR	ELJ-FC1R0MF	L301	1
RX VCO UNIT/160	CHIP COIL	KQ1008TER82K	L302	1
RX VCO UNIT/160	CHIP COIL	#3074	L303	1
RX VCO UNIT/160	CHIP COIL	KQ1008TER82K	L304	1
RX VCO UNIT/160	CHIP INDUCTOR	ELJ-FC1R0MF	L305	1
RX VCO UNIT/160	CHIP COIL	LL2012-F68NK	L306	1
RX VCO UNIT/160	CHIP RESISTOR	MCR10EZHJ100	L307	1
RX VCO UNIT/160	CHIP COIL	#1092(R12-H693Y)	L308	1
RX VCO UNIT/160	CHIP FET	2SK508-T1B-K53	Q301	1
RX VCO UNIT/160	CHIP TRANSISTOR	2SC4250-TE85R	Q302	1
RX VCO UNIT/160	CHIP TRANSISTOR	2SC3583-T1B-R34	Q303	1
RX VCO UNIT/160	CHIP TRANSISTOR	DTA124EKA-T107	Q304	1
RX VCO UNIT/160	CHIP TRANSISTOR	2SD2351-T106	Q305	1
RX VCO UNIT/160	CHIP TRANSISTOR	DTA124EKA-T107	Q306	1
RX VCO UNIT/160	CHIP CAPACITOR	GRM40CH070D50PT	R305	1
RX VCO UNIT/160	CHIP RESISTOR	MCR10EZHJ150	R306	1
RX VCO UNIT/160	CHIP RESISTOR	MCR10EZHJ221	R307	1
RX VCO UNIT/160	CHIP RESISTOR	MCR10EZHJ472	R308	1
RX VCO UNIT/160	CHIP RESISTOR	MCR10EZHJ472	R309	1
RX VCO UNIT/160	CHIP RESISTOR	MCR10EZHJ471	R310	1
RX VCO UNIT/160	CHIP RESISTOR	MCR10EZHJ471	R311	1
RX VCO UNIT/160	CHIP RESISTOR	MCR10EZHJ101	R312	1
RX VCO UNIT/160	CHIP RESISTOR	MCR10EZHJ222	R314	1
RX VCO UNIT/160	CHIP RESISTOR	MCR10EZHJ472	R315	1
RX VCO UNIT/160	CHIP RESISTOR	MCR10EZHJ332	R316	1
RX VCO UNIT/160	CHIP RESISTOR	MCR10EZHJ102	R317	1
RX VCO UNIT/160	CHIP RESISTOR	MCR10EZHJ470	R318	1
RX VCO UNIT/160	CHIP RESISTOR	MCR10EZHJ4R7	R319	1
RX VCO UNIT/160	CHIP RESISTOR	MCR10EZHJ821	R320	1
RX VCO UNIT/160	CHIP RESISTOR	MCR10EZHJ150	R321	1
RX VCO UNIT/160	CHIP RESISTOR	MCR10EZHJ103	R322	1
RX VCO UNIT/160	CHIP RESISTOR	MCR10EZHJ101	R323	1
RX VCO UNIT/160	CHIP CHECKER	RCT	TP301	1
RX VCO UNIT/160	P.C.B.	51VCU86-1□1/4□		1
RX VCO UNIT/160	VCO COVER	4A10-2170		1
RX VCO UNIT/160	VCO SHIELD	4A10-3029		1
RX VCO UNIT/160	VCO SHIELD CASE	4A10-2169		1
PA UNIT/160	POWERMODULE	M68702H	PM501	1
PA UNIT/160	CHIP IC	BAM4558F	IC501	1
PA UNIT/160	CHIP IC	TA75S01F-TE85R	IC502	1
PA UNIT/160	CHIP IC	M5237ML-600C	IC503	1
PA UNIT/160	CHIP IC	AN78L05M	IC504	1
PA UNIT/160	COIL LEAD CHOKE	FBA04VA900KF	BL505	1
PA UNIT/160	COIL LEAD CHOKE	FBA04VA900KF	BL506	1
PA UNIT/160	CHIP COIL	FBMH3216HM501NT	BL507	1
PA UNIT/160	CHIP COIL	FBMH3216HM501NT	BL508	1
PA UNIT/160	COIL LEAD CHOKE	FBA04VA900KF	BL509	1
PA UNIT/160	CHIP COIL	FBMH3216HM501NT	BL510	1
PA UNIT/160	COIL LEAD CHOKE	FBA04VA900KF	BL512	1
PA UNIT/160	COIL LEAD CHOKE	FBA04VA900KF	BL514	1
PA UNIT/160	COIL LEAD CHOKE	FBA04VA900KF	BL515	1
PA UNIT/160	COIL LEAD CHOKE	FBA04VA900KF	BL518	1
PA UNIT/160	COIL LEAD CHOKE	FBA04VA900KF	BL519	1
PA UNIT/160	CHIP CAPACITOR	GRM40B471K50PT	C501	1
PA UNIT/160	CHIP CAPACITOR	GRM40B102K50PT	C502	1
PA UNIT/160	CHIP CAPACITOR	GRM40CH151J50PT	C503	1
PA UNIT/160	CHIP CAPACITOR	GRM40CH560J50PT	C504	1
PA UNIT/160	CHIP CAPACITOR	GRM40B102K50PT	C505	1
PA UNIT/160	CHIP CAPACITOR	GRM40B102K50PT	C506	1
PA UNIT/160	CHIP CAPACITOR	GRM40B102K50PT	C508	1

PA UNIT/160	CHIP CAPACITOR	GRM40B102K50PT	C510	1
PA UNIT/160	CHIP CAPACITOR	GRM40CH151J50PT	C512	1
PA UNIT/160	CHIP MICA	UC342H4700J	C513	1
PA UNIT/160	CHIP CAPACITOR	GRM40CH330J50PT	C517	1
PA UNIT/160	CHIP CAPACITOR	GRM40CK0R5C50PT	C521	1
PA UNIT/160	CHIP CAPACITOR	GRM40CK1R5C50PT	C524	1
PA UNIT/160	CHIP CAPACITOR	GRM40B102K50PT	C525	1
PA UNIT/160	CHIP CAPACITOR	GRM40B102K50PT	C526	1
PA UNIT/160	CHIP CAPACITOR	GRM40B102K50PT	C527	1
PA UNIT/160	CHIP CAPACITOR	GRM40B102K50PT	C528	1
PA UNIT/160	CHIP CAPACITOR	GRM40B102K50PT	C529	1
PA UNIT/160	CHIP CAPACITOR	GRM40B102K50PT	C530	1
PA UNIT/160	CHIP MICA	UC552H8200J	C531	1
PA UNIT/160	CHIP MICA	UC232H0150D	C532	1
PA UNIT/160	CHIP MICA	UC232H0180D	C533	1
PA UNIT/160	CHIP MICA	UC232H0180D	C534	1
PA UNIT/160	CHIP MICA	UC232H0150D	C535	1
PA UNIT/160	CHIP MICA	UC232H01R5D	C538	1
PA UNIT/160	CHIP CAPACITOR	GRM40B102K50PT	C540	1
PA UNIT/160	CHIP ELECTROLYT	MVK35VC4R7M D55	C541	1
PA UNIT/160	CHIP CAPACITOR	GRM40B103K50PT	C542	1
PA UNIT/160	CHIP CAPACITOR	GRM40B102K50PT	C545	1
PA UNIT/160	CHIP TANTALUM	ECST1VY224R	C546	1
PA UNIT/160	CHIP CAPACITOR	GRM40B102K50PT	C547	1
PA UNIT/160	CHIP CAPACITOR	GRM40B102K50PT	C548	1
PA UNIT/160	CHIP CAPACITOR	GRM40B102K50PT	C549	1
PA UNIT/160	CHIP CAPACITOR	GRM40B104K25PT	C550	1
PA UNIT/160	CHIP ELECTROLYT	MVK25VC33M F55	C552	1
PA UNIT/160	CHIP CAPACITOR	GRM40B104K25PT	C553	1
PA UNIT/160	CHIP ELECTROLYT	MVK25VC33M F55	C554	1
PA UNIT/160	CHIP TANTALUM	ECST1CY225R	C555	1
PA UNIT/160	CHIP CAPACITOR	GRM40B104K25PT	C556	1
PA UNIT/160	CHIP MICA	UC232H0030D	C558	1
PA UNIT/160	CHIP MICA	UC232H0150D	C559	1
PA UNIT/160	CHIP MICA	UC232H0150D	C560	1
PA UNIT/160	CORD	4A-S599	CBL1	1
PA UNIT/160	CONNECTOR	SM551	CN501	1
PA UNIT/160	CONNECTOR	4A-S588	CN502	1
PA UNIT/160	CHIP DIODE	1SS356-TW11	D501	1
PA UNIT/160	CHIP DIODE	RB501V-40TE-17	D503	1
PA UNIT/160	CHIP DIODE	RB501V-40TE-17	D504	1
PA UNIT/160	CHIP DIODE	RB501V-40TE-17	D505	1
PA UNIT/160	CHIP ZENNER DIODE	UDZ2.4B-TE17	D506	1
PA UNIT/160	CHIP DIODE	1SS355	D507	1
PA UNIT/160	CHIP DIODE	1SS355	D508	1
PA UNIT/160	CHIP DIODE	1SS355	D509	1
PA UNIT/160	CHIP DIODE	SML210-VT-T86	D510	1
PA UNIT/160	THROUCH C.	1HB340YE102PDA05	FVC501	1
PA UNIT/160	CHIP VARICAP	EVM-7JSX30B22	FVR501	1
PA UNIT/160	CHIP VR	G3AT 2K	FVR502	1
PA UNIT/160	CHIP VR	G3AT 2K	FVR503	1
PA UNIT/160	CHIP VARICAP	EVM-7JSX30B15	FVR504	1
PA UNIT/160	CHIP INDUCTOR	LQN1HR29K04M00	L501	1
PA UNIT/160	COIL □□□	4A-S596	L502	1
PA UNIT/160	COIL □□□	4A-S597	L503	1
PA UNIT/160	COIL □□□	4A-S598	L504	1
PA UNIT/160	COIL □□□	4A-S597	L505	1
PA UNIT/160	TRANSISTOR	2SC1947-01	Q501	1
PA UNIT/160	CHIP TRANSISTOR	DTC124EKA-T146	Q502	1
PA UNIT/160	CHIP TRANSISTOR	DTB143EK-T146	Q503	1
PA UNIT/160	CHIP TRANSISTOR	2SC2412K	Q504	1
PA UNIT/160	TRANSISTOR	2SB1018A	Q505	1
PA UNIT/160	CHIP TRANSISTOR	2SK2731-T146	Q507	1

PA UNIT/160	CHIP RESISTOR	MCR10EZHJ182	R501	1
PA UNIT/160	CHIP RESISTOR	MCR10EZHJ471	R502	1
PA UNIT/160	CHIP RESISTOR	MCR10EZHJ3R3	R503	1
PA UNIT/160	CHIP RESISTOR	MCR10EZHJ560	R506	1
PA UNIT/160	CHIP RESISTOR	MCR10EZHJ222	R507	1
PA UNIT/160	CHIP RESISTOR	MCR10EZHJ151	R509	1
PA UNIT/160	CHIP RESISTOR	MCR10EZHJ103	R510	1
PA UNIT/160	CHIP RESISTOR	MCR10EZHJ103	R511	1
PA UNIT/160	CHIP RESISTOR	MCR10EZHJ103	R512	1
PA UNIT/160	CHIP RESISTOR	MCR10EZHJ471	R513	1
PA UNIT/160	CHIP RESISTOR	MCR10EZHJ562	R514	1
PA UNIT/160	CHIP RESISTOR	MCR10EZHJ473	R515	1
PA UNIT/160	CHIP RESISTOR	MCR10EZHJ474	R516	1
PA UNIT/160	CHIP RESISTOR	MCR10EZHJ104	R517	1
PA UNIT/160	CHIP RESISTOR	MCR10EZHJ682	R518	1
PA UNIT/160	CHIP RESISTOR	MCR10EZHJ103	R519	1
PA UNIT/160	CHIP RESISTOR	MCR10EZHJ102	R520	1
PA UNIT/160	CHIP RESISTOR	MCR10EZHJ102	R521	1
PA UNIT/160	CHIP RESISTOR	MCR10EZHJ562	R522	1
PA UNIT/160	CHIP RESISTOR	MCR10EZHJ392	R523	1
PA UNIT/160	CHIP RESISTOR	MCR10EZHJ562	R524	1
PA UNIT/160	CHIP RESISTOR	MCR10EZHJ104	R525	1
PA UNIT/160	CHIP RESISTOR	MCR10EZHJ104	R526	1
PA UNIT/160	CHIP RESISTOR	MCR18EZHJ4R7	R528	1
PA UNIT/160	CHIP RESISTOR	MCR10EZHJ473	R529	1
PA UNIT/160	CHIP RESISTOR	MCR10EZHJ104	R530	1
PA UNIT/160	CHIP RESISTOR	MCR10EZHJ271	R531	1
PA UNIT/160	CHIP RESISTOR	MCR100EZHJ271	R532	1
PA UNIT/160	CHIP RESISTOR	MCR10EZHJ104	R533	1
PA UNIT/160	CHIP RESISTOR	MCR10EZHJ123	R534	1
PA UNIT/160	CHIP RESISTOR	MCR10EZHJ472	R535	1
PA UNIT/160	CHIP RESISTOR	MCR10EZHJ184	R536	1
PA UNIT/160	CHIP RESISTOR	MCR10EZHJ102	R537	1
PA UNIT/160	CHIP RESISTOR	MCR18EZHJ471	R538	1
PA UNIT/160	CHIP RESISTOR	MCR10EZHJ271	R539	1
PA UNIT/160	CHIP RESISTOR	MCR10EZHJ272	R540	1
PA UNIT/160	CHIP RESISTOR	MCR10EZHJ472	R541	1
PA UNIT/160	CHIP RESISTOR	MCR10EZHJ472	R542	1
PA UNIT/160	CHIP RESISTOR	MCR10EZHJ272	R543	1
PA UNIT/160	CHIP RESISTOR	MCR18EZHJ4R7	R544	1
PA UNIT/160	CHIP RESISTOR	MCR10EZHJ102	R545	1
PA UNIT/160	CHIP RESISTOR	MCR10EZHJ682	R546	1
PA UNIT/160	CHIP RESISTOR	MCR10EZHJ470	R547	1
PA UNIT/160	CHIP RESISTOR	MCR10EZHJ222	R548	1
PA UNIT/160	CHIP CHECKER	RCT	TP501	1
PA UNIT/160	CHIP CHECKER	RCT	TP502	1
PA UNIT/160	SHIELD PLATE	4A10-3111		1
PA UNIT/160	P.C.B.	51PAV9X-2		1
PAP UNIT	COIL LEAD CHOKE	FBA04VA900KF	BL516	1
PAP UNIT	COIL LEAD CHOKE	FBA04VA900KF	BL517	1
PAP UNIT	MYCROHEDA	JM16LH-03CBT	CN503	1
PAP UNIT	CONNECTOR	4A-S600	CP501	1
PAP UNIT	CONNECTOR	4A-S601	DC510 -	1
PAP UNIT	CONNECTOR	4A-S602	DC510 +	1
PAP UNIT	THROUCH C.	1HB340YE102PDA05	FC502	1
PAP UNIT	P.C.B.	51PAP8X□1/4□		1
PA CH UNIT	BOSS	4A10-2999		8
PA CH UNIT	PA COVER	3A10-0574		1
PA CH UNIT	PA FRAME	2A10-0211		1
PA CH UNIT	SCREW SEMS	SE-3 X 5		7
PA CH UNIT	PA SEAL-510	3A10-0596		1
PA CH UNIT	SCREW SEMS	SE-3 X 8		8
KEY UNIT	CHIP CONNECTOR	00-6200-510-130-000	CN405	1

KEY UNIT	SWITCH	SKHMPW		20
KEY UNIT	P.C.B.	51KEY87-1□1/4□		1
KEY UNIT	SPACER	4A10-2996		4
KEY UNIT	SCREW SEMS	SE-3 X 10		4
VR UNIT	P.C.B.	51VRS87-2□1/4□		1
VR UNIT	CHIP CONNECTOR	00-6200-508-130-000	CN407	1
VR UNIT	DIODE □□□	SLA-370MT-3F	D412	1
VR UNIT	SWITCH	SPPH23056A	SW401	1
VR UNIT	ROTARY SWITCH	RY-6459	VR401	1
VR UNIT	ROTARY SWITCH	RY-6460	VR402	1
VR UNIT	BUTTON	4A10-2988		1
VR UNIT	SCREW SEMS	SE-3 X 10		2
CONT MAIN UNIT	CHIP IC	TA75S558F-TE85R	IC401	1
CONT MAIN UNIT	CHIP IC	TC74HC373AF(TP1)	IC402	1
CONT MAIN UNIT	CHIP IC	TA78M05F-TE16L	IC403	1
CONT MAIN UNIT	IC	TA8201AK	IC404	1
CONT MAIN UNIT	IC	PQ12RH11	IC405	1
CONT MAIN UNIT	CHIP IC	NJU7662M-T1	IC406	1
CONT MAIN UNIT	CHIP IC	BU4S01F-TR	IC407	1
CONT MAIN UNIT	CHIP CAPACITOR	GRM40B102K50PT	C401	1
CONT MAIN UNIT	CHIP CAPACITOR	GRM42-6B105K16NPT	C402	1
CONT MAIN UNIT	CHIP ELECTROLYT	MVK50VC1M D55	C403	1
CONT MAIN UNIT	CHIP CAPACITOR	GRM40CH101J50PT	C404	1
CONT MAIN UNIT	CHIP ELECTROLYT	MVK16VC10M D55	C405	1
CONT MAIN UNIT	CHIP CAPACITOR	GRM42-6B104K50PT	C406	1
CONT MAIN UNIT	CHIP CAPACITOR	GRM40CH271J50PT	C407	1
CONT MAIN UNIT	CHIP CAPACITOR	GRM40CH271J50PT	C408	1
CONT MAIN UNIT	CHIP ELECTROLYT	MVK16VC10M D55	C409	1
CONT MAIN UNIT	CHIP CAPACITOR	GRM40B102K50PT	C410	1
CONT MAIN UNIT	CHIP CAPACITOR	GRM42-6B104K50PT	C411	1
CONT MAIN UNIT	CHIP ELECTROLYT	MVK16VC10M D55	C412	1
CONT MAIN UNIT	CHIP ELECTROLYT	MVK16VC10M D55	C413	1
CONT MAIN UNIT	CHIP ELECTROLYT	MVK16VC10M D55	C414	1
CONT MAIN UNIT	CHIP TANTALUM	ECST1CY105R	C417	1
CONT MAIN UNIT	C.ELECTROLYT	KMG35VB-470M	C418	1
CONT MAIN UNIT	C.ELECTROLYT	KMG35VB-470M	C419	1
CONT MAIN UNIT	C.ELECTROLYT	KMG16VB-1000M	C420	1
CONT MAIN UNIT	CHIP CAPACITOR	GRM40B102K50PT	C421	1
CONT MAIN UNIT	CHIP CAPACITOR	GRM42-6B105K16NPT	C422	1
CONT MAIN UNIT	CHIP ELECTROLYT	MVK16VC47M F55	C424	1
CONT MAIN UNIT	CHIP ELECTROLYT	MVK35VC4R7M D55	C425	1
CONT MAIN UNIT	CHIP TANTALUM	ECST1AY106R	C427	1
CONT MAIN UNIT	C.ELECTROLYT	KMG16VB-220	C428	1
CONT MAIN UNIT	CHIP CAPACITOR	GRM40B104K25PT	C429	1
CONT MAIN UNIT	CHIP CAPACITOR	GRM40B104K25PT	C430	1
CONT MAIN UNIT	CHIP CAPACITOR	GRM40B104K25PT	C431	1
CONT MAIN UNIT	MIC SOCKET	290A-88-30-119	CN401	1
CONT MAIN UNIT	CHIP CONNECTOR	00-6200-520-330-000	CN402	1
CONT MAIN UNIT	CHIP CONNECTOR	00-6200-516-230-000	CN403	1
CONT MAIN UNIT	CHIP CONNECTOR	00-6200-510-130-000	CN404	1
CONT MAIN UNIT	CHIP CONNECTOR	00-6200-508-130-000	CN406	1
CONT MAIN UNIT	CONNECTOR □□□	B 3P-VH	CN408	1
CONT MAIN UNIT	CONNECTOR	SB20-02WS	CN409	1
CONT MAIN UNIT	CONNECTOR	FF20-TAMEP1	CP401	1
CONT MAIN UNIT	LED	MU16-4101	D401	1
CONT MAIN UNIT	LED	MU16-3101	D402	1
CONT MAIN UNIT	LED	MU16-2101	D403	1
CONT MAIN UNIT	LED	MU16-5101	D404	1
CONT MAIN UNIT	CHIP DIODE	1SS355	D405	1
CONT MAIN UNIT	CHIP DIODE	1SS355	D406	1
CONT MAIN UNIT	CHIP DIODE	1SS355	D407	1
CONT MAIN UNIT	CHIP DIODE	1SS355	D408	1
CONT MAIN UNIT	CHIP DIODE	1SS355	D409	1

CONT MAIN UNIT	CHIP DIODE	DA204U-T106	D411	1
CONT MAIN UNIT	CHIP DIODE	DA204U-T106	D412	1
CONT MAIN UNIT	CHIP DIODE	1SS355	D414	1
CONT MAIN UNIT	FLAT CABLE	4A-S429	FLC402	1
CONT MAIN UNIT	FLAT CABLE	4A-S471	FLC403	1
CONT MAIN UNIT	FLAT CABLE	4A-S585	FLC405	1
CONT MAIN UNIT	FLAT CABLE	4A-S584	FLC407	1
CONT MAIN UNIT	VR □□□	GF06P 10K	FVR401	1
CONT MAIN UNIT	VR □□□	GF06P 100K	FVR402	1
CONT MAIN UNIT	CHIP VARICAP	EVM-7JSX30B14	FVR403	1
CONT MAIN UNIT	HEADPHONE JACK	S-G8022#01	J401	1
CONT MAIN UNIT	LCD	TM12832BBC	LCD401	1
CONT MAIN UNIT	CHIP TRANSISTOR	DTC114EKA-T146	Q401	1
CONT MAIN UNIT	CHIP TRANSISTOR	FMG9A-T148	Q402	1
CONT MAIN UNIT	CHIP TRANSISTOR	FMG9A-T148	Q403	1
CONT MAIN UNIT	CHIP TRANSISTOR	2SD1766-T100	Q404	1
CONT MAIN UNIT	CHIP TRANSISTOR	2SD2351-T106	Q405	1
CONT MAIN UNIT	CHIP TRANSISTOR	2SJ503	Q406	1
CONT MAIN UNIT	CHIP TRANSISTOR	UMC2-TR	Q407	1
CONT MAIN UNIT	CHIP TRANSISTOR	2SA1434-TB	Q408	1
CONT MAIN UNIT	CHIP TRANSISTOR	2SA1434-TB	Q409	1
CONT MAIN UNIT	CHIP TRANSISTOR	2SA1434-TB	Q410	1
CONT MAIN UNIT	CHIP RESISTOR	MCR10EZHJ000	R401	1
CONT MAIN UNIT	CHIP RESISTOR	MCR10EZHJ153	R405	1
CONT MAIN UNIT	CHIP RESISTOR	MCR10EZHJ102	R406	1
CONT MAIN UNIT	CHIP RESISTOR	MCR10EZHJ103	R407	1
CONT MAIN UNIT	CHIP RESISTOR	MCR10EZHJ273	R408	1
CONT MAIN UNIT	CHIP RESISTOR	MCR10EZHJ104	R409	1
CONT MAIN UNIT	CHIP RESISTOR	MCR10EZHJ104	R410	1
CONT MAIN UNIT	CHIP RESISTOR	MCR10EZHJ473	R411	1
CONT MAIN UNIT	CHIP RESISTOR	MCR10EZHJ222	R412	1
CONT MAIN UNIT	CHIP RESISTOR	MCR10EZHJ222	R414	1
CONT MAIN UNIT	CHIP RESISTOR	MCR10EZHJ560	R415	1
CONT MAIN UNIT	CHIP RESISTOR	MCR10EZHJ560	R416	1
CONT MAIN UNIT	CHIP RESISTOR	MCR10EZHJ221	R417	1
CONT MAIN UNIT	CHIP RESISTOR	MCR10EZHJ330	R418	1
CONT MAIN UNIT	CHIP RESISTOR	MCR10EZHJ473	R419	1
CONT MAIN UNIT	CHIP RESISTOR	MCR10EZHJ183	R420	1
CONT MAIN UNIT	CHIP RESISTOR	MCR10EZHJ822	R421	1
CONT MAIN UNIT	CHIP RESISTOR	MCR10EZHJ470	R422	1
CONT MAIN UNIT	CHIP RESISTOR	MCR10EZHJ470	R423	1
CONT MAIN UNIT	CHIP RESISTOR	MCR10EZHJ223	R424	1
CONT MAIN UNIT	CHIP RESISTOR	MCR10EZHJ472	R425	1
CONT MAIN UNIT	CHIP RESISTOR	MCR10EZHJ472	R426	1
CONT MAIN UNIT	CHIP RESISTOR	MCR10EZHJ181	R427	1
CONT MAIN UNIT	CHIP RESISTOR	MCR10EZHJ470	R428	1
CONT MAIN UNIT	CHIP RESISTOR	MCR10EZHJ470	R429	1
CONT MAIN UNIT	CHIP RESISTOR	MCR10EZHJ472	R430	1
CONT MAIN UNIT	CHIP RESISTOR	MCR10EZHJ472	R431	1
CONT MAIN UNIT	CHIP RESISTOR	MCR10EZHJ472	R432	1
CONT MAIN UNIT	CHIP RESISTOR	MCR10EZHJ472	R433	1
CONT MAIN UNIT	CHIP RESISTOR	MCR10EZHJ472	R434	1
CONT MAIN UNIT	CHIP RESISTOR	MCR10EZHJ472	R435	1
CONT MAIN UNIT	CHIP RESISTOR	MCR10EZHJ472	R436	1
CONT MAIN UNIT	CHIP RESISTOR	MCR10EZHJ472	R437	1
CONT MAIN UNIT	CHIP RESISTOR	MCR10EZHJ472	R438	1
CONT MAIN UNIT	CHIP RESISTOR	MCR10EZHJ103	R439	1
CONT MAIN UNIT	CHIP RESISTOR	MCR10EZHJ471	R440	1
CONT MAIN UNIT	CHIP RESISTOR	MCR10EZHJ472	R441	1
CONT MAIN UNIT	CHIP RESISTOR	MCR10EZHJ103	R442	1
CONT MAIN UNIT	CHIP RESISTOR	MCR18EZHJ4R7	R444	1
CONT MAIN UNIT	CHIP RESISTOR	MCR10EZHJ222	R445	1
CONT MAIN UNIT	CHIP RESISTOR	MCR10EZHJ563	R446	1

CONT MAIN UNIT	CHIP RESISTOR	MCR18EZHJ100	R447	1
CONT MAIN UNIT	CHIP RESISTOR	MCR10EZHJ333	R448	1
CONT MAIN UNIT	CHIP RESISTOR	MCR10EZHJ103	R449	1
CONT MAIN UNIT	CHIP RESISTOR	MCR10EZHJ332	R450	1
CONT MAIN UNIT	CHIP RESISTOR	MCR10EZHJ000	R451	1
CONT MAIN UNIT	CHIP RESISTOR	MCR10EZHJ822	R452	1
CONT MAIN UNIT	CHIP RESISTOR	MCR10EZHJ152	R453	1
CONT MAIN UNIT	CHIP RESISTOR	MCR10EZHJ224	R454	1
CONT MAIN UNIT	CHIP RESISTOR	MCR10EZHJ103	R455	1
CONT MAIN UNIT	CHIP RESISTOR	MCR10EZHJ104	R456	1
CONT MAIN UNIT	CHIP RESISTOR	MCR10EZHJ104	R457	1
CONT MAIN UNIT	CHIP RESISTOR	MCR10EZHJ103	R458	1
CONT MAIN UNIT	CHIP THERMISTER	TN10-4C103KT	TH401	1
CONT MAIN UNIT	COLLAR	4A10-3045		8
CONT MAIN UNIT	CORE	BP53RD030310120M	CN402-CN1	1
CONT MAIN UNIT	P.C.B.	51FR087-3□1/2□		1
CONT MAIN UNIT	SCREW SEMS	SE-3 X 10		6
CONT MAIN UNIT	SPACER	4A10-3004A		3
CONT MAIN UNIT	PLATE	4A10-3079		1
CONT UNIT	FRONT PANEL	2A10-0213		1
CONT UNIT	BUTTON	4A10-2985		1
CONT UNIT	WINDOW	4A10-2987		1
CONT UNIT	KNOB	4A10-2989		2
CONT UNIT	SP GRILL	4A10-3001		1
CONT UNIT	SP SPACER	4A10-3026		1
CONT UNIT	TAPE FOR WINDOW	4A10-3047		1
CONT UNIT	CONNECTOR CABLE	□□4A-S499		1
CONT UNIT	SPEAKER	KS-110		1
CONT UNIT	SCREW PAN TP	PN-3 X 8 TP		4
IF UNIT/NORMAL	CHIP IC	TK10487M-TR	IC106	1
IF UNIT/NORMAL	CHIP CAPACITOR	GRM40CK010C50PT	C158	1
IF UNIT/NORMAL	CHIP CAPACITOR	GRM40CK010C50PT	C159	1
IF UNIT/NORMAL	CHIP CAPACITOR	GRM40CH040C50PT	C160	1
IF UNIT/NORMAL	CHIP CAPACITOR	GRM40CH120J50PT	C161	1
IF UNIT/NORMAL	CHIP CAPACITOR	GRM40CH220J50PT	C162	1
IF UNIT/NORMAL	CHIP CAPACITOR	GRM40B222K50PT	C163	1
IF UNIT/NORMAL	CHIP CAPACITOR	GRM40B102K50PT	C164	1
IF UNIT/NORMAL	CHIP CAPACITOR	GRM40B102K50PT	C165	1
IF UNIT/NORMAL	CHIP CAPACITOR	GRM40B153K50PT	C167	1
IF UNIT/NORMAL	CHIP CAPACITOR	GRM40B102K50PT	C168	1
IF UNIT/NORMAL	CHIP CAPACITOR	GRM40CH220J50PT	C169	1
IF UNIT/NORMAL	CHIP CAPACITOR	GRM40B222K50PT	C170	1
IF UNIT/NORMAL	CHIP CAPACITOR	GRM40CH470J50PT	C171	1
IF UNIT/NORMAL	CHIP CAPACITOR	GRM40B471K50PT	C172	1
IF UNIT/NORMAL	CHIP CAPACITOR	GRM40CH331J50PT	C173	1
IF UNIT/NORMAL	CHIP CAPACITOR	GRM40B223K25PT	C174	1
IF UNIT/NORMAL	CHIP CAPACITOR	GRM40B222K50PT	C175	1
IF UNIT/NORMAL	CHIP TANTALUM	ECST1CY684R	C176	1
IF UNIT/NORMAL	CHIP TANTALUM	ECST1VY334R	C177	1
IF UNIT/NORMAL	CHIP CAPACITOR	GRM42-6B105K16NPT	C178	1
IF UNIT/NORMAL	CHIP CAPACITOR	GRM40B473K25PT	C179	1
IF UNIT/NORMAL	CHIP CAPACITOR	GRM40B473K25PT	C180	1
IF UNIT/NORMAL	CHIP CAPACITOR	GRM40B473K25PT	C181	1
IF UNIT/NORMAL	CHIP CAPACITOR	GRM40B473K25PT	C182	1
IF UNIT/NORMAL	CHIP CAPACITOR	GRM40CH101J50PT	C183	1
IF UNIT/NORMAL	CHIP CAPACITOR	GRM42-6B105K16NPT	C184	1
IF UNIT/NORMAL	CHIP CAPACITOR	GRM40B153K50PT	C185	1
IF UNIT/NORMAL	CHIP CAPACITOR	GRM40B153K50PT	C186	1
IF UNIT/NORMAL	CHIP CAPACITOR	GRM40CH151J50PT	C190	1
IF UNIT/NORMAL	DISCRIMINATOR	CDBM455C7	CD101	1
IF UNIT/NORMAL	CERAMIC FILTER	CFWM455G	CF101	1
IF UNIT/NORMAL	CERAMIC FILTER	CFWM455E	CF102	1
IF UNIT/NORMAL	CONNECTOR	LPC-2T7M	CP103	1

IF UNIT/NORMAL	CONNECTOR	LPC-6T7M	CP104	1
IF UNIT/NORMAL	CHIP DIODE	1SS356-TW11	D115	1
IF UNIT/NORMAL	CHIP DIODE	1SS356-TW11	D116	1
IF UNIT/NORMAL	CHIP DIODE	1SS355	D117	1
IF UNIT/NORMAL	CHIP DIODE	RB501V-40TE-17	D123	1
IF UNIT/NORMAL	CHIP VARICAP	EVM-7JSX30B24	FVR101	1
IF UNIT/NORMAL	CHIP INDUCTOR	NL322522T-R68J	L115	1
IF UNIT/NORMAL	CHIP INDUCTOR	ELJ-NCR47KF	L117	1
IF UNIT/NORMAL	CHIP TRANSISTOR	2SC4250(TE85R)	Q113	1
IF UNIT/NORMAL	CHIP TRANSISTOR	DTC314TK-T146	Q114	1
IF UNIT/NORMAL	CHIP FET	2SK209-Y(TE85R)	Q115	1
IF UNIT/NORMAL	CHIP FET	2SK209-Y(TE85R)	Q116	1
IF UNIT/NORMAL	CHIP TRANSISTOR	2SK3018-T106	Q127	1
IF UNIT/NORMAL	CHIP RESISTOR	MCR10EZHJ104	R160	1
IF UNIT/NORMAL	CHIP CAPACITOR	GRM40CK1R5C50PT	R161	1
IF UNIT/NORMAL	CHIP RESISTOR	MCR10EZHJ000	R162	1
IF UNIT/NORMAL	CHIP RESISTOR	MCR10EZHJ471	R163	1
IF UNIT/NORMAL	CHIP RESISTOR	MCR10EZHJ561	R164	1
IF UNIT/NORMAL	CHIP RESISTOR	MCR10EZHJ331	R165	1
IF UNIT/NORMAL	CHIP RESISTOR	MCR10EZHJ122	R166	1
IF UNIT/NORMAL	CHIP RESISTOR	MCR10EZHJ103	R167	1
IF UNIT/NORMAL	CHIP RESISTOR	MCR10EZHJ474	R168	1
IF UNIT/NORMAL	CHIP RESISTOR	MCR10EZHJ000	R169	1
IF UNIT/NORMAL	CHIP RESISTOR	MCR10EZHJ392	R170	1
IF UNIT/NORMAL	CHIP RESISTOR	MCR10EZHJ821	R171	1
IF UNIT/NORMAL	CHIP RESISTOR	MCR10EZHJ103	R172	1
IF UNIT/NORMAL	CHIP RESISTOR	MCR10EZHJ104	R173	1
IF UNIT/NORMAL	CHIP RESISTOR	MCR10EZHJ223	R174	1
IF UNIT/NORMAL	CHIP RESISTOR	MCR10EZHJ102	R175	1
IF UNIT/NORMAL	CHIP RESISTOR	MCR10EZHJ392	R176	1
IF UNIT/NORMAL	CHIP RESISTOR	MCR10EZHJ272	R177	1
IF UNIT/NORMAL	CHIP RESISTOR	MCR10EZHJ154	R178	1
IF UNIT/NORMAL	CHIP RESISTOR	MCR10EZHJ154	R179	1
IF UNIT/NORMAL	CHIP RESISTOR	MCR10EZHJ154	R180	1
IF UNIT/NORMAL	CHIP RESISTOR	MCR10EZHJ103	R181	1
IF UNIT/NORMAL	CHIP RESISTOR	MCR10EZHJ753	R182	1
IF UNIT/NORMAL	CRYSTAL FILTER	48.045MHZ	X101	1
IF UNIT/NORMAL	CRYSTAL FILTER	48S15B	X102A	1
IF UNIT/NORMAL	CRYSTAL FILTER	48S15B	X102B	1
IF UNIT/NORMAL	CF COVER	4A10-1624		2
IF UNIT/NORMAL	P.C.B.	51IF86-2□1/4□		1
IF UNIT/NORMAL	SCREW SEMS	SE-3 X 6		2
LOG UNIT	CHIP COIL	FBMH3216HM501NT	BL1	1
LOG UNIT	CHIP COIL	BLM21B421SPT	BL2	1
LOG UNIT	CHIP COIL	BLM21B421SPT	BL3	1
LOG UNIT	CHIP COIL	BLM21B421SPT	BL4	1
LOG UNIT	CHIP COIL	BLM21B421SPT	BL5	1
LOG UNIT	CHIP COIL	BLM21B421SPT	BL6	1
LOG UNIT	CHIP COIL	BLM21B421SPT	BL7	1
LOG UNIT	CHIP ELECTROLYT	MVK35VC4R7M D55	C1	1
LOG UNIT	CHIP TANTALUM	ECST1CY105R	C2	1
LOG UNIT	CHIP TANTALUM	ECST1CY105R	C3	1
LOG UNIT	CHIP ELECTROLYT	MVK16VC47M F55	C4	1
LOG UNIT	CHIP CAPACITOR	GRM40B104K25PT	C5	1
LOG UNIT	CHIP CAPACITOR	GRM40B104K25PT	C6	1
LOG UNIT	CHIP CAPACITOR	GRM40B222K50PT	C7	1
LOG UNIT	CHIP CAPACITOR	GRM40CH331J50PT	C8	1
LOG UNIT	DISK CAPACITOR	EECS5R5H474	C9	1
LOG UNIT	CHIP TANTALUM	ECST1VY224R	C10	1
LOG UNIT	CHIP CAPACITOR	GRM40B103K50PT	C11	1
LOG UNIT	CHIP CAPACITOR	GRM42-6B225K16NPT	C12	1
LOG UNIT	CHIP CAPACITOR	GRM40CH221J50PT	C13	1
LOG UNIT	CHIP CAPACITOR	GRM40CH470J50PT	C14	1

LOG UNIT	CHIP CAPACITOR	GRM40B103K50PT	C15	1
LOG UNIT	CHIP TANTALUM	ECST1CY105R	C16	1
LOG UNIT	CHIP TANTALUM	ECST1CY105R	C17	1
LOG UNIT	CHIP CAPACITOR	GRM40B104K25PT	C19	1
LOG UNIT	CHIP CAPACITOR	GRM40B473K25PT	C20	1
LOG UNIT	CHIP CAPACITOR	GRM40B104K25PT	C21	1
LOG UNIT	CHIP CAPACITOR	GRM40CH470J50PT	C22	1
LOG UNIT	CHIP CAPACITOR	GRM40B104K25PT	C23	1
LOG UNIT	CHIP CAPACITOR	GRM42-6B225K16NPT	C24	1
LOG UNIT	CHIP TANTALUM	ECST1CY105R	C25	1
LOG UNIT	CHIP CAPACITOR	GRM40B104K25PT	C27	1
LOG UNIT	CHIP CAPACITOR	GRM40B104K25PT	C28	1
LOG UNIT	CHIP CAPACITOR	GRM40CH820J50PT	C31	1
LOG UNIT	CHIP CAPACITOR	GRM40B104K25PT	C32	1
LOG UNIT	CHIP CAPACITOR	GRM40B104K25PT	C33	1
LOG UNIT	CHIP CAPACITOR	GRM40B103K50PT	C36	1
LOG UNIT	CHIP CAPACITOR	GRM40B473K25PT	C37	1
LOG UNIT	CHIP CAPACITOR	GRM40CH220J50PT	C38	1
LOG UNIT	CHIP CAPACITOR	GRM40CH220J50PT	C39	1
LOG UNIT	CHIP TANTALUM	ECST1EY474R	C40	1
LOG UNIT	CHIP CAPACITOR	GRM40B473K25PT	C42	1
LOG UNIT	CHIP CAPACITOR	GRM40CH330J50PT	C43	1
LOG UNIT	CHIP CAPACITOR	GRM40B473K25PT	C44	1
LOG UNIT	CHIP CAPACITOR	GRM40CH220J50PT	C45	1
LOG UNIT	CHIP CAPACITOR	GRM40CH220J50PT	C46	1
LOG UNIT	CHIP CAPACITOR	GRM40B103K50PT	C47	1
LOG UNIT	CHIP CAPACITOR	GRM40B103K50PT	C48	1
LOG UNIT	CHIP CAPACITOR	GRM40B103K50PT	C49	1
LOG UNIT	CHIP CAPACITOR	GRM40B333K25PT	C50	1
LOG UNIT	CHIP CAPACITOR	GRM40CH820J50PT	C51	1
LOG UNIT	CHIP CAPACITOR	GRM40B103K50PT	C52	1
LOG UNIT	CHIP TANTALUM	ECST1CY105R	C53	1
LOG UNIT	CHIP TANTALUM	ECST1CY105R	C54	1
LOG UNIT	CHIP CAPACITOR	GRM40CH470J50PT	C55	1
LOG UNIT	CHIP CAPACITOR	GRM42-6B225K16NPT	C58	1
LOG UNIT	CHIP TANTALUM	ECST1VY224R	C59	1
LOG UNIT	CHIP CAPACITOR	GRM40B104K25PT	C60	1
LOG UNIT	CHIP CAPACITOR	GRM40B104K25PT	C61	1
LOG UNIT	CHIP CAPACITOR	GRM40B473K25PT	C62	1
LOG UNIT	CHIP CAPACITOR	GRM40B473K25PT	C63	1
LOG UNIT	CHIP CAPACITOR	GRM40B104K25PT	C64	1
LOG UNIT	CHIP CAPACITOR	GRM40B682K50PT	C65	1
LOG UNIT	CHIP CAPACITOR	GRM40B473K25PT	C66	1
LOG UNIT	CHIP CAPACITOR	GRM40CH470J50PT	C67	1
LOG UNIT	CHIP CAPACITOR	GRM40B104K25PT	C68	1
LOG UNIT	CHIP CAPACITOR	GRM42-6B105K16NPT	C69	1
LOG UNIT	CHIP CAPACITOR	GRM40B104K25PT	C70	1
LOG UNIT	CHIP ELECTROLYT	MVK16VC47M F55	C71	1
LOG UNIT	CHIP TANTALUM	ECST1EY474R	C72	1
LOG UNIT	CHIP CAPACITOR	GRM40B104K25PT	C73	1
LOG UNIT	CHIP ELECTROLYT	MVK16VC10M D55	C74	1
LOG UNIT	CHIP CAPACITOR	GRM40B103K50PT	C75	1
LOG UNIT	CHIP CAPACITOR	GRM40B104K25PT	C76	1
LOG UNIT	CHIP ELECTROLYT	MVK16VC47M F55	C77	1
LOG UNIT	CHIP ELECTROLYT	MVK16VC47M F55	C78	1
LOG UNIT	CHIP CAPACITOR	GRM40B104K25PT	C79	1
LOG UNIT	CHIP CAPACITOR	GRM40B102K50PT	C80	1
LOG UNIT	CHIP CAPACITOR	GRM40B102K50PT	C81	1
LOG UNIT	CHIP CAPACITOR	GRM40B102K50PT	C82	1
LOG UNIT	CHIP CAPACITOR	GRM40B102K50PT	C83	1
LOG UNIT	CHIP CAPACITOR	GRM40B102K50PT	C84	1
LOG UNIT	CHIP CAPACITOR	GRM40B102K50PT	C85	1
LOG UNIT	CHIP CONNECTOR	00-6200-520-330-000	CN1	1

LOG UNIT	CHIP CONNECTOR	00-6200-516-230-000	CN2	1
LOG UNIT	CHIP CONNECTOR	00-6200-516-230-000	CN3	1
LOG UNIT	CHIP CONNECTOR	236A-08-90-134	CN4	1
LOG UNIT	CHIP CONNECTOR	236A-08-90-134	CN5	1
LOG UNIT	CONNECTOR	SB20-03WS	CN6	1
LOG UNIT	CHIP CONNECTOR	00-6200-516-230-000	CN7	1
LOG UNIT	CHIP CONNECTOR	00-6200-516-230-000	CN8	1
LOG UNIT	CHIP CONNECTOR	00-6200-520-330-000	CN9	1
LOG UNIT	CHIP DIODE	1SS355	D1	1
LOG UNIT	CHIP DIODE	1SS355	D2	1
LOG UNIT	CHIP DIODE	1SS355	D3	1
LOG UNIT	CHIP DIODE	1SS355	D4	1
LOG UNIT	CHIP DIODE	1SS355	D5	1
LOG UNIT	CHIP DIODE	RB501V-40TE-17	D7	1
LOG UNIT	CHIP DIODE	1SS355	D8	1
LOG UNIT	CHIP DIODE	DAP202U-T106	D9	1
LOG UNIT	CHIP DIODE	DAP202U-T106	D10	1
LOG UNIT	CHIP DIODE	RB501V-40TE-17	D11	1
LOG UNIT	CHIP DIODE	DAN202U-T106	D12	1
LOG UNIT	CHIP DIODE	1SS355	D13	1
LOG UNIT	CHIP DIODE	1SS355	D14	1
LOG UNIT	CHIP DIODE	1SS355	D15	1
LOG UNIT	CHIP TRIMMER	TZV02R200A110	FVC1	1
LOG UNIT	CHIP VARICAP	EVM-7JSX30B24	FVR1	1
LOG UNIT	CHIP VARICAP	EVM-7JSX30B25	FVR2	1
LOG UNIT	CHIP VARICAP	EVM-7JSX30B54	FVR3	1
LOG UNIT	CHIP IC	UPD78F0058GC	IC1	1
LOG UNIT	IC	AK2344	IC2	1
LOG UNIT	IC	AK2344	IC3	1
LOG UNIT	CHIP IC	AN78L05M	IC4	1
LOG UNIT	CHIP IC	AN78L05M	IC5	1
LOG UNIT	CHIP IC	NJM2405M-T1	IC6	1
LOG UNIT	EE ROM	HN58C65FP-25	IC7	1
LOG UNIT	CHIP IC	TC74HC373AF(TP1)	IC8	1
LOG UNIT	CHIP IC	RN5VL22AA-TL	IC9	1
LOG UNIT	CHIP IC	TA75S01F(TE85R)	IC10	1
LOG UNIT	CHIP IC	BU4S81-TR	IC11	1
LOG UNIT	CHIP IC	BU4S01-TR	IC12	1
LOG UNIT	CHIP IC	TS272CD	IC13	1
LOG UNIT	CHIP IC	TS272CD	IC14	1
LOG UNIT	CHIP IC	BU4S81-TR	IC15	1
LOG UNIT	CHIP IC	NJM2073M-T1	IC16	1
LOG UNIT	CHIP IC	BU4S66-TR	IC17	1
LOG UNIT	CHIP IC	TC7W74FU(TE12L)	IC18	1
LOG UNIT	JUMPER PLUG	DIC-149-3P	JP1	1
LOG UNIT	JUMPER SOCKET	DIC-128	JS	1
LOG UNIT	CHIP FET	2SK209-Y(TE85R)	Q1	1
LOG UNIT	CHIP FET	2SK209-Y(TE85R)	Q2	1
LOG UNIT	CHIP FET	2SK209-Y(TE85R)	Q3	1
LOG UNIT	CHIP FET	2SK209-Y(TE85R)	Q4	1
LOG UNIT	CHIP TRANSISTOR	RN6001(TE12R,C)	Q6	1
LOG UNIT	CHIP TRANSISTOR	DTC124EKA-T146	Q7	1
LOG UNIT	CHIP RESISTOR	MCR10EZHJ104	R00	1
LOG UNIT	CHIP RESISTOR	MCR10EZHJ823	R01	1
LOG UNIT	CHIP RESISTOR	MCR10EZHJ562	R02	1
LOG UNIT	CHIP RESISTOR	MCR10EZHJ225	R03	1
LOG UNIT	CHIP RESISTOR	MCR10EZHJ273	R04	1
LOG UNIT	CHIP RESISTOR	MCR10EZHJ473	R05	1
LOG UNIT	CHIP RESISTOR	MCR10EZHJ154	R1	1
LOG UNIT	CHIP RESISTOR	MCR10EZHJ113	R2	1
LOG UNIT	CHIP RESISTOR	MCR10EZHJ225	R3	1
LOG UNIT	CHIP RESISTOR	MCR10EZHJ184	R4	1
LOG UNIT	CHIP RESISTOR	MCR10EZHJ105	R5	1

LOG UNIT	CHIP RESISTOR	MCR10EZHJ273	R6	1
LOG UNIT	CHIP RESISTOR	MCR10EZHJ104	R7	1
LOG UNIT	CHIP RESISTOR	MCR10EZHJ273	R8	1
LOG UNIT	CHIP RESISTOR	MCR10EZHJ104	R9	1
LOG UNIT	CHIP RESISTOR	MCR10EZHJ473	R10	1
LOG UNIT	CHIP RESISTOR	MCR10EZHJ752	R11	1
LOG UNIT	CHIP RESISTOR	MCR10EZHJ682	R12	1
LOG UNIT	CHIP RESISTOR	MCR10EZHJ101	R13	1
LOG UNIT	CHIP RESISTOR	MCR10EZHJ103	R14	1
LOG UNIT	CHIP RESISTOR	MCR10EZHJ393	R15	1
LOG UNIT	CHIP RESISTOR	MCR10EZHJ153	R16	1
LOG UNIT	CHIP RESISTOR	MCR10EZHJ103	R17	1
LOG UNIT	CHIP RESISTOR	MCR10EZHJ473	R18	1
LOG UNIT	CHIP RESISTOR	MCR10EZHJ223	R19	1
LOG UNIT	CHIP RESISTOR	MCR10EZHJ154	R20	1
LOG UNIT	CHIP RESISTOR	MCR10EZHJ104	R21	1
LOG UNIT	CHIP RESISTOR	MCR10EZHJ472	R22	1
LOG UNIT	CHIP RESISTOR	MCR10EZHJ104	R23	1
LOG UNIT	CHIP RESISTOR	MCR10EZHJ154	R24	1
LOG UNIT	CHIP RESISTOR	MCR10EZHJ183	R25	1
LOG UNIT	CHIP RESISTOR	MCR10EZHJ473	R26	1
LOG UNIT	CHIP RESISTOR	MCR10EZHJ222	R27	1
LOG UNIT	CHIP RESISTOR	MCR10EZHJ823	R28	1
LOG UNIT	CHIP RESISTOR	MCR10EZHJ154	R29	1
LOG UNIT	CHIP RESISTOR	MCR10EZHJ154	R30	1
LOG UNIT	CHIP RESISTOR	MCR10EZHJ103	R32	1
LOG UNIT	CHIP RESISTOR	MCR10EZHJ473	R33	1
LOG UNIT	CHIP RESISTOR	MCR10EZHJ154	R34	1
LOG UNIT	CHIP RESISTOR	MCR10EZHJ223	R35	1
LOG UNIT	CHIP RESISTOR	MCR10EZHJ223	R36	1
LOG UNIT	CHIP RESISTOR	MCR10EZHJ104	R37	1
LOG UNIT	CHIP RESISTOR	MCR10EZHJ105	R38	1
LOG UNIT	CHIP RESISTOR	MCR10EZHJ472	R39	1
LOG UNIT	CHIP RESISTOR	MCR10EZHJ102	R40	1
LOG UNIT	CHIP RESISTOR	MCR10EZHJ472	R41	1
LOG UNIT	CHIP RESISTOR	MCR10EZHJ473	R42	1
LOG UNIT	CHIP RESISTOR	MCR10EZHJ563	R43	1
LOG UNIT	CHIP RESISTOR	MCR10EZHJ103	R44	1
LOG UNIT	CHIP RESISTOR	MCR10EZHJ000	R45	1
LOG UNIT	CHIP RESISTOR	MCR10EZHJ000	R46	1
LOG UNIT	CHIP RESISTOR	MCR10EZHJ223	R47	1
LOG UNIT	CHIP RESISTOR	MCR10EZHJ103	R49	1
LOG UNIT	CHIP RESISTOR	MCR10EZHJ105	R50	1
LOG UNIT	CHIP RESISTOR	MCR10EZHJ823	R52	1
LOG UNIT	CHIP RESISTOR	MCR10EZHJ333	R53	1
LOG UNIT	CHIP RESISTOR	MCR10EZHJ103	R54	1
LOG UNIT	CHIP RESISTOR	MCR10EZHJ154	R55	1
LOG UNIT	CHIP RESISTOR	MCR10EZHJ333	R56	1
LOG UNIT	CHIP RESISTOR	MCR10EZHJ683	R57	1
LOG UNIT	CHIP RESISTOR	MCR10EZHJ104	R58	1
LOG UNIT	CHIP RESISTOR	MCR10EZHJ104	R59	1
LOG UNIT	CHIP RESISTOR	MCR10EZHJ154	R60	1
LOG UNIT	CHIP RESISTOR	MCR10EZHJ103	R61	1
LOG UNIT	CHIP RESISTOR	MCR10EZHJ823	R62	1
LOG UNIT	CHIP RESISTOR	MCR10EZHJ103	R63	1
LOG UNIT	CHIP RESISTOR	MCR10EZHJ124	R64	1
LOG UNIT	CHIP RESISTOR	MCR10EZHJ104	R65	1
LOG UNIT	CHIP RESISTOR	MCR10EZHJ104	R66	1
LOG UNIT	CHIP RESISTOR	MCR10EZHJ473	R67	1
LOG UNIT	CHIP RESISTOR	MCR10EZHJ124	R68	1
LOG UNIT	CHIP RESISTOR	MCR10EZHJ223	R69	1
LOG UNIT	CHIP RESISTOR	MCR10EZHJ154	R70	1
LOG UNIT	CHIP RESISTOR	MCR10EZHJ104	R71	1

LOG UNIT	CHIP RESISTOR	MCR10EZHJ154	R72	1
LOG UNIT	CHIP RESISTOR	MCR10EZHJ184	R73	1
LOG UNIT	CHIP RESISTOR	MCR10EZHJ3R3	R74	1
LOG UNIT	CHIP RESISTOR	MCR10EZHJ474	R75	1
LOG UNIT	CHIP RESISTOR	MCR10EZHJ472	R76	1
LOG UNIT	CHIP RESISTOR	MCR50EZHJ4R7	R77	1
LOG UNIT	CHIP RESISTOR	MCR10EZHJ472	R78	1
LOG UNIT	CHIP RESISTOR	MCR10EZHJ104	R79	1
LOG UNIT	CHIP RESISTOR	MCR10EZHJ473	R80	1
LOG UNIT	CHIP RESISTOR	MCR10EZHJ103	R82	1
LOG UNIT	CHIP RESISTOR	MCR10EZHJ104	R83	1
LOG UNIT	CHIP RESISTOR	MCR10EZHJ473	R84	1
LOG UNIT	CHIP RESISTOR	MCR10EZHJ472	R85	1
LOG UNIT	CHIP RESISTOR	MCR10EZHJ103	R86	1
LOG UNIT	CHIP RESISTOR	MCR10EZHJ271	R87	1
LOG UNIT	CHIP RESISTOR	MCR10EZHJ271	R88	1
LOG UNIT	CHIP RESISTOR	MCR10EZHJ473	R89	1
LOG UNIT	CHIP RESISTOR	MCR10EZHJ154	R90	1
LOG UNIT	CHIP RESISTOR	MCR10EZHJ223	R91	1
LOG UNIT	CHIP RESISTOR	MCR10EZHJ273	R94	1
LOG UNIT	CHIP RESISTOR	MCR10EZHJ154	R95	1
LOG UNIT	CHIP RESISTOR	MCR10EZHJ472	R96	1
LOG UNIT	CHIP RESISTOR	MCR10EZHJ394	R97	1
LOG UNIT	CHIP RESISTOR	MCR10EZHJ102	R98	1
LOG UNIT	CHIP RESISTOR	MCR10EZHJ103	R99	1
LOG UNIT	CHIP R ARRAY	MNR14E0ABJ472	RA1	1
LOG UNIT	CHIP R ARRAY	MNR14E0ABJ472	RA2	1
LOG UNIT	CHIP R ARRAY	MNR14E0ABJ472	RA3	1
LOG UNIT	CHIP CHECKER	RCT	TP1	1
LOG UNIT	CRYSTAL	DS-MAT309(4.19MHZ)	X1	1
LOG UNIT	CRYSTAL	SMX-3F(3.6864MHZ)	X2	1
LOG UNIT	CRYSTAL	SMX-3F(3.6864MHZ)	X3	1
LOG UNIT	P.C.B.	51LOG87-4□1/2□		1
DC UNIT	DC PLUG	21-3B	CN701	1
DC UNIT	CONNECTOR	SB20-02WS	CN702	1
DC UNIT	CONNECTOR	SB20-02WS	CN703	1
DC UNIT	TERMINAL	42822-2	CP701	1
DC UNIT	TERMINAL	42117-2	CP702	1
DC UNIT	CONNECTOR	4A-S603	CP703	1
DC UNIT	DIODE □□□	20DL2C	D701	1
DC UNIT	CHIP DIODE	1SR154-400TE25	D702	1
DC UNIT	CHIP TRANSISTOR	2SD2153	Q701	1
DC UNIT	P.C.B.	51DC99□1/4□		1
DS UNIT	CHIP CONNECTOR	00-6200-520-330-000	CN601	1
DS UNIT	CHIP CONNECTOR	00-6200-516-230-000	CN602	1
DS UNIT	CONNECTOR	DELC-J25SAF-20L9	CN603	1
DS UNIT	CONNECTOR	DELC-J9SAF-20L9	CN604	1
DS UNIT	P.C.B.	51DSUB9X□1/4□		1
ASSY	FLAT CABLE	4A-S471	FL102(RX)	1
ASSY	FLAT CABLE	4A-S471	FL202(TX)	1
ASSY	FLAT CABLE	4A-S579	FL601	1
ASSY	FLAT CABLE	4A-S580	FL602	1
ASSY	BNC CONNECTOR	BNC-J/NJ(F)		1
ASSY	BNC CONNECTOR	BNC-PA-JJ		1
ASSY	BOTTOM COVER	3A10-0571		1
ASSY	CHASSIS-KG510	3A10-0572		1
ASSY	DC SOCKET	21-3A		1
ASSY	FUSE	FGBO 125V 20A		2
ASSY	FUSE HOLDER	SN-2054#01C		1
ASSY	HANDLE	3A10-0570		2
ASSY	HEAT SINK	2A10-0209		1
ASSY	NUT	NT-3		4
ASSY	PLATE	4A10-2995		1

ASSY	PROTECTOR(L)	3A10-0579	1
ASSY	PROTECTOR(R)	3A10-0578	1
ASSY	REAR PANEL	2A10-0212A	1
ASSY	RUBBER CUSHION	SJ-5009	4
ASSY	SCREW BIND(BLK)	BDB-3 X 5	8
ASSY	SCREW FLAT	OV-3 X 8	3
ASSY	SCREW OVAL(BLK)	OVB-4 X 8	2
ASSY	SCREW SEMS	SE-2.6 X 8	4
ASSY	SCREW SEMS	SE-3 X 10	4
ASSY	SCREW SEMS	SE-3 X 8	31
ASSY	SCREW SEMS(BLK)	SEB-4 X 10	19
ASSY	SCREW SEMS(BLK)	SEB-4 X 15	4
ASSY	SIDE(L)	2A10-0207	1
ASSY	SIDE(R)	2A10-0208	1
ASSY	SPRING	FOT-233-00	2
ASSY	WASHER	FW-3(L)	4

KG510-40D

UNIT NAME	PARTS NAME	DESCRIPTION	PARTS NO	QUTY
TX MAIN UNIT/460	CHIP IC	AN78L05M	IC201	1
TX MAIN UNIT/460	CHIP IC	TA78M05F-TE16L	IC202	1
TX MAIN UNIT/460	CHIP IC	TS272CD	IC203	1
TX MAIN UNIT/460	CHIP IC	TA75S01F-TE85R	IC204	1
TX MAIN UNIT/460	CHIP IC	MB1511PFV-G-BND-EF	IC205	1
TX MAIN UNIT/460	CHIP IC	NJU7662M-T1	IC206	1
TX MAIN UNIT/460	CHIP IC	BU4S66-TR	IC207	1
TX MAIN UNIT/460	CHIP IC	M5237ML-600C	IC208	1
TX MAIN UNIT/460	CHIP IC	NJM2904M-T1	IC209	1
TX MAIN UNIT/460	CHIP COIL	FBMH3216HM501NT	BL201	1
TX MAIN UNIT/460	CHIP COIL	FBMH3216HM501NT	BL202	1
TX MAIN UNIT/460	CHIP COIL	BLM21B421SPT	BL203	1
TX MAIN UNIT/460	CHIP COIL	BLM21B421SPT	BL204	1
TX MAIN UNIT/460	CHIP COIL	BLM21B421SPT	BL205	1
TX MAIN UNIT/460	CHIP COIL	FBMH3216HM501NT	BL206	1
TX MAIN UNIT/460	CHIP COIL	BLM21B421SPT	BL207	1
TX MAIN UNIT/460	CHIP ELECTROLYT	MVK16VC10M D55	C201	1
TX MAIN UNIT/460	CHIP TANTALUM	ECST1AY475R	C202	1
TX MAIN UNIT/460	CHIP TANTALUM	ECST1CY105R	C203	1
TX MAIN UNIT/460	CHIP CAPACITOR	GRM40CH101J50PT	C204	1
TX MAIN UNIT/460	CHIP CAPACITOR	GRM42-6B105K16NPT	C205	1
TX MAIN UNIT/460	CHIP CAPACITOR	GRM40CH470J50PT	C207	1
TX MAIN UNIT/460	CHIP TANTALUM	ECST1VY224R	C208	1
TX MAIN UNIT/460	CHIP CAPACITOR	GRM42-6B105K16NPT	C209	1
TX MAIN UNIT/460	CHIP CAPACITOR	GRM40B102K50PT	C210	1
TX MAIN UNIT/460	CHIP CAPACITOR	GRM40B473K25PT	C211	1
TX MAIN UNIT/460	CHIP ELECTROLYT	MVK16VC10M D55	C212	1
TX MAIN UNIT/460	CHIP ELECTROLYT	MVK16VC10M D55	C213	1
TX MAIN UNIT/460	CHIP CAPACITOR	GRM40B473K25PT	C214	1
TX MAIN UNIT/460	CHIP CAPACITOR	GRM40CH101J50PT	C215	1
TX MAIN UNIT/460	CHIP CAPACITOR	GRM40CJ030C50PT	C217	1
TX MAIN UNIT/460	CHIP CAPACITOR	GRM40B153K50PT	C218	1
TX MAIN UNIT/460	CHIP TANTALUM	ECST1CY225R	C219	1
TX MAIN UNIT/460	CHIP CAPACITOR	GRM40B153K50PT	C220	1
TX MAIN UNIT/460	CHIP ELECTROLYT	MVK16VC10M D55	C221	1
TX MAIN UNIT/460	CHIP ELECTROLYT	MVK16VC10M D55	C222	1
TX MAIN UNIT/460	CHIP ELECTROLYT	MVK16VC10M D55	C223	1
TX MAIN UNIT/460	CHIP ELECTROLYT	MVK16VC10M D55	C224	1
TX MAIN UNIT/460	CHIP ELECTROLYT	MVK16VC10M D55	C225	1
TX MAIN UNIT/460	CHIP CAPACITOR	GRM40B104K25PT	C226	1
TX MAIN UNIT/460	CHIP CAPACITOR	GRM40B473K25PT	C227	1
TX MAIN UNIT/460	CHIP CAPACITOR	GRM42-6B105K16NPT	C228	1
TX MAIN UNIT/460	CHIP TANTALUM	ECST1VY154R	C230	1
TX MAIN UNIT/460	CHIP CAPACITOR	GRM40B102K50PT	C231	1
TX MAIN UNIT/460	CHIP CAPACITOR	GRM40B103K50PT	C232	1
TX MAIN UNIT/460	CHIP CAPACITOR	GRM40B102K50PT	C233	1
TX MAIN UNIT/460	CHIP CAPACITOR	GRM40B473K25PT	C234	1
TX MAIN UNIT/460	CHIP CAPACITOR	GRM40B103K50PT	C235	1
TX MAIN UNIT/460	CHIP CAPACITOR	GRM40B471K50PT	C236	1
TX MAIN UNIT/460	CHIP CAPACITOR	GRM40B102K50PT	C237	1
TX MAIN UNIT/460	CHIP CAPACITOR	GRM40B102K50PT	C238	1
TX MAIN UNIT/460	CHIP ELECTROLYT	MVK25VC33M F55	C239	1
TX MAIN UNIT/460	CHIP CAPACITOR	GRM40CH100D50PT	C240	1
TX MAIN UNIT/460	CHIP CAPACITOR	GRM40B102K50PT	C241	1
TX MAIN UNIT/460	CHIP CAPACITOR	GRM40B102K50PT	C243	1
TX MAIN UNIT/460	CHIP CAPACITOR	GRM40CH100D50PT	C244	1
TX MAIN UNIT/460	CHIP CAPACITOR	GRM40CH100D50PT	C245	1
TX MAIN UNIT/460	CHIP CAPACITOR	GRM40B102K50PT	C246	1
TX MAIN UNIT/460	CHIP CAPACITOR	GRM40B102K50PT	C247	1
TX MAIN UNIT/460	CHIP CAPACITOR	GRM40CH100D50PT	C248	1
TX MAIN UNIT/460	CHIP CAPACITOR	GRM40CK020C50PT	C249	1
TX MAIN UNIT/460	CHIP CAPACITOR	GRM40CK010C50PT	C251	1
TX MAIN UNIT/460	CHIP CAPACITOR	GRM40CJ030C50PT	C252	1
TX MAIN UNIT/460	CHIP CAPACITOR	GRM40CH101J50PT	C253	1
TX MAIN UNIT/460	CHIP CAPACITOR	GRM40B102K50PT	C254	1
TX MAIN UNIT/460	CHIP CAPACITOR	GRM40B223K25PT	C255	1
TX MAIN UNIT/460	CHIP CAPACITOR	GRM40B223K25PT	C256	1
TX MAIN UNIT/460	CHIP TANTALUM	ECST1CY105R	C257	1

TX MAIN UNIT/460	CORD	4A-S586	CN201	1
TX MAIN UNIT/460	CONNECTOR	52030-1610	CN202	1
TX MAIN UNIT/460	CONNECTOR	LPC-6FDS	CS201	1
TX MAIN UNIT/460	CONNECTOR	LPC-2FDS	CS202	1
TX MAIN UNIT/460	CHIP ZENNER DIODE	UDZ2.4B-TE17	D201	1
TX MAIN UNIT/460	CHIP DIODE	1SS355	D202	1
TX MAIN UNIT/460	CHIP DIODE	1SS355	D205	1
TX MAIN UNIT/460	CHIP DIODE	DA204U-T106	D206	1
TX MAIN UNIT/460	CHIP DIODE	DA204U-T106	D207	1
TX MAIN UNIT/460	CHIP DIODE	1SS355	D210	1
TX MAIN UNIT/460	CHIP DIODE	RB501V-40TE-17	D211	1
TX MAIN UNIT/460	CHIP DIODE	1SS356-TW11	D212	1
TX MAIN UNIT/460	CHIP DIODE	1SS356-TW11	D213	1
TX MAIN UNIT/460	CHIP DIODE	SML210-VT-T86	D214	1
TX MAIN UNIT/460	CHIP VR	G3AT 20K	FVR201	1
TX MAIN UNIT/460	CHIP VARICAP	EVM-7JSX30B25	FVR202	1
TX MAIN UNIT/460	CHIP VARICAP	EVM-7JSX30B15	FVR203	1
TX MAIN UNIT/460	CHIP VR	G3AT 5K	FVR204	1
TX MAIN UNIT/460	CHIP COIL	#1091(R12-H510Y)	L201	1
TX MAIN UNIT/460	CHIP INDUCTOR	LQN1AR10J04	L202	1
TX MAIN UNIT/460	CHIP INDUCTOR	LQN1A8N8J04	L203	1
TX MAIN UNIT/460	TCXO(510UHF)	VT20P-08	OC201	1
TX MAIN UNIT/460	SCREW SEMS	SE-3 X 6	PCB	6
TX MAIN UNIT/460	SCREW SEMS	SE-3 X 8	COVER	6
TX MAIN UNIT/460	CHIP TRANSISTOR	2SK2731-T146	Q201	1
TX MAIN UNIT/460	CHIP TRANSISTOR	FMG9A-T148	Q202	1
TX MAIN UNIT/460	CHIP TRANSISTOR	UMC2-TR	Q203	1
TX MAIN UNIT/460	CHIP TRANSISTOR	2SK3018-T106	Q204	1
TX MAIN UNIT/460	CHIP TRANSISTOR	2SD2351-T106	Q205	1
TX MAIN UNIT/460	CHIP TRANSISTOR	2SK3018-T106	Q206	1
TX MAIN UNIT/460	CHIP TRANSISTOR	2SJ-166-T1B	Q207	1
TX MAIN UNIT/460	CHIP TRANSISTOR	2SK3018-T106	Q208	1
TX MAIN UNIT/460	CHIP TRANSISTOR	UMC2-TR	Q209	1
TX MAIN UNIT/460	CHIP TRANSISTOR	FMG2A-T148	Q210	1
TX MAIN UNIT/460	CHIP TRANSISTOR	FMG2A-T148	Q211	1
TX MAIN UNIT/460	CHIP TRANSISTOR	2SB1184TL	Q212	1
TX MAIN UNIT/460	CHIP TRANSISTOR	IMX1-T110	Q214	1
TX MAIN UNIT/460	CHIP TRANSISTOR	2SC3357-T1	Q215	1
TX MAIN UNIT/460	TRANSISTOR	2SC2131-01	Q216	1
TX MAIN UNIT/460	CHIP RESISTOR	MCR10EZHJ103	R201	1
TX MAIN UNIT/460	CHIP RESISTOR	MCR10EZHJ103	R202	1
TX MAIN UNIT/460	CHIP RESISTOR	MCR10EZHJ103	R203	1
TX MAIN UNIT/460	CHIP RESISTOR	MCR10EZHJ683	R204	1
TX MAIN UNIT/460	CHIP RESISTOR	MCR10EZHJ153	R205	1
TX MAIN UNIT/460	CHIP RESISTOR	MCR10EZHJ472	R206	1
TX MAIN UNIT/460	CHIP RESISTOR	MCR10EZHJ103	R207	1
TX MAIN UNIT/460	CHIP RESISTOR	MCR10EZHJ104	R209	1
TX MAIN UNIT/460	CHIP RESISTOR	MCR10EZHJ104	R210	1
TX MAIN UNIT/460	CHIP RESISTOR	MCR10EZHJ184	R211	1
TX MAIN UNIT/460	CHIP RESISTOR	MCR10EZHJ153	R212	1
TX MAIN UNIT/460	CHIP RESISTOR	MCR10EZHJ472	R213	1
TX MAIN UNIT/460	CHIP RESISTOR	MCR10EZHJ392	R214	1
TX MAIN UNIT/460	CHIP RESISTOR	MCR10EZHJ103	R215	1
TX MAIN UNIT/460	CHIP RESISTOR	MCR10EZHJ103	R216	1
TX MAIN UNIT/460	CHIP RESISTOR	MCR10EZHJ103	R217	1
TX MAIN UNIT/460	CHIP RESISTOR	MCR10EZHJ103	R219	1
TX MAIN UNIT/460	CHIP RESISTOR	MCR10EZHJ104	R221	1
TX MAIN UNIT/460	CHIP RESISTOR	MCR10EZHJ101	R222	1
TX MAIN UNIT/460	CHIP RESISTOR	MCR10EZHJ472	R223	1
TX MAIN UNIT/460	CHIP RESISTOR	MCR10EZHJ103	R224	1
TX MAIN UNIT/460	CHIP RESISTOR	MCR10EZHJ102	R225	1
TX MAIN UNIT/460	CHIP RESISTOR	MCR10EZHJ103	R226	1
TX MAIN UNIT/460	CHIP RESISTOR	MCR10EZHJ273	R227	1
TX MAIN UNIT/460	CHIP RESISTOR	MCR10EZHJ183	R228	1
TX MAIN UNIT/460	CHIP RESISTOR	MCR10EZHJ470	R229	1
TX MAIN UNIT/460	CHIP RESISTOR	MCR10EZHJ470	R230	1
TX MAIN UNIT/460	CHIP RESISTOR	MCR10EZHJ393	R231	1
TX MAIN UNIT/460	CHIP RESISTOR	MCR10EZHJ102	R232	1
TX MAIN UNIT/460	CHIP RESISTOR	MCR10EZHJ102	R233	1
TX MAIN UNIT/460	CHIP RESISTOR	MCR10EZHJ272	R234	1
TX MAIN UNIT/460	CHIP RESISTOR	MCR10EZHJ473	R236	1

TX MAIN UNIT/460	CHIP RESISTOR	MCR10EZHJ152	R237	1
TX MAIN UNIT/460	CHIP RESISTOR	MCR10EZHJ271	R239	1
TX MAIN UNIT/460	CHIP RESISTOR	MCR18EZHJ471	R240	1
TX MAIN UNIT/460	CHIP RESISTOR	MCR10EZHJ103	R241	1
TX MAIN UNIT/460	CHIP RESISTOR	MCR10EZHJ103	R243	1
TX MAIN UNIT/460	CHIP RESISTOR	MCR10EZHJ473	R244	1
TX MAIN UNIT/460	CHIP RESISTOR	MCR18EZHJ4R7	R245	1
TX MAIN UNIT/460	CHIP RESISTOR	MCR10EZHJ153	R246	1
TX MAIN UNIT/460	CHIP RESISTOR	MCR10EZHJ104	R247	1
TX MAIN UNIT/460	CHIP RESISTOR	MCR10EZHJ000	R248	1
TX MAIN UNIT/460	CHIP RESISTOR	MCR10EZHJ473	R249	1
TX MAIN UNIT/460	CHIP RESISTOR	MCR10EZHJ184	R250	1
TX MAIN UNIT/460	CHIP RESISTOR	MCR10EZHJ152	R251	1
TX MAIN UNIT/460	CHIP RESISTOR	MCR10EZHJ471	R252	1
TX MAIN UNIT/460	CHIP RESISTOR	MCR10EZHJ104	R253	1
TX MAIN UNIT/460	CHIP RESISTOR	MCR10EZHJ473	R254	1
TX MAIN UNIT/460	CHIP RESISTOR	MCR10EZHJ473	R255	1
TX MAIN UNIT/460	CHIP RESISTOR	MCR10EZHJ104	R256	1
TX MAIN UNIT/460	CHIP RESISTOR	MCR10EZHJ473	R257	1
TX MAIN UNIT/460	CHIP RESISTOR	MCR10EZHJ154	R259	1
TX MAIN UNIT/460	CHIP RESISTOR	MCR10EZHJ822	R260	1
TX MAIN UNIT/460	CHIP RESISTOR	MCR10EZHJ103	R261	1
TX MAIN UNIT/460	CHIP RESISTOR	MCR10EZHJ103	R262	1
TX MAIN UNIT/460	CHIP RESISTOR	MCR10EZHJ393	R263	1
TX MAIN UNIT/460	CHIP RESISTOR	MCR10EZHJ100	R264	1
TX MAIN UNIT/460	CHIP RESISTOR	MCR10EZHJ271	R265	1
TX MAIN UNIT/460	CHIP RESISTOR	MCR10EZHJ271	R266	1
TX MAIN UNIT/460	CHIP RESISTOR	MCR10EZHJ3R3	R267	1
TX MAIN UNIT/460	CHIP RESISTOR	MCR10EZHJ472	R268	1
TX MAIN UNIT/460	CHIP RESISTOR	MCR10EZHJ4R7	R269	1
TX MAIN UNIT/460	CHIP RESISTOR	MCR10EZHJ471	R270	1
TX MAIN UNIT/460	CHIP RESISTOR	MCR18EZHJ100	R271	1
TX MAIN UNIT/460	CHIP RESISTOR	MCR10EZHJ101	R272	1
TX MAIN UNIT/460	CHIP RESISTOR	MCR10EZHJ152	R273	1
TX MAIN UNIT/460	CHIP RESISTOR	MCR10EZHJ2R2	R274	1
TX MAIN UNIT/460	CHIP RESISTOR	MCR18EZHJ471	R275	1
TX MAIN UNIT/460	CHIP RESISTOR	MCR18EZHJ4R7	R276	1
TX MAIN UNIT/460	CHIP RESISTOR	MCR10EZHJ103	R277	1
TX MAIN UNIT/460	CHIP RESISTOR	MCR10EZHJ182	R278	1
TX MAIN UNIT/460	CHIP RESISTOR	MCR18EZHJ471	R279	1
TX MAIN UNIT/460	CHIP RESISTOR	MCR10EZHJ182	R280	1
TX MAIN UNIT/460	BOSS	4A10-3000		2
TX MAIN UNIT/460	P.C.B.	51TXU86-4□1/2□		1
TX MAIN UNIT/460	SPRING	4A10-2200		2
TX MAIN UNIT/460	TX COVER	4A10-3037		1
TX MAIN UNIT/460	TX SEAL	4A10-3039		1
TX MAIN UNIT/460	TX/RX FRAME	2A10-0210		1
TX VCO UNIT/460	CHIP IC	UPC1688G-T1	IC301	1
TX VCO UNIT/460	CHIP COIL	FBMH3216HM501NT	BL301	1
TX VCO UNIT/460	CHIP COIL	BLM21B421SPT	BL302	1
TX VCO UNIT/460	CHIP CAPACITOR	GRM40B823K25PT	C302	1
TX VCO UNIT/460	CHIP CAPACITOR	GRM40CJ030C50PT	C303	1
TX VCO UNIT/460	CHIP CAPACITOR	GRM40CH100D50PT	C305	1
TX VCO UNIT/460	CHIP CAPACITOR	GRM39CK0R3C50PT	C306	1
TX VCO UNIT/460	CHIP CAPACITOR	GRM40CK010C50PT	C307	1
TX VCO UNIT/460	CHIP CAPACITOR	GRM40CH060D50PT	C308	1
TX VCO UNIT/460	CHIP CAPACITOR	GRM40CJ030C50PT	C309	1
TX VCO UNIT/460	CHIP CAPACITOR	GRM40CJ030C50PT	C310	1
TX VCO UNIT/460	CHIP CAPACITOR	GRM40CKR75C50PT	C311	1
TX VCO UNIT/460	CHIP CAPACITOR	GRM40B102K50PT	C312	1
TX VCO UNIT/460	CHIP CAPACITOR	GRM40B102K50PT	C313	1
TX VCO UNIT/460	CHIP CAPACITOR	GRM40CH050C50PT	C314	1
TX VCO UNIT/460	CHIP CAPACITOR	GRM40CK010C50PT	C315	1
TX VCO UNIT/460	CHIP CAPACITOR	GRM40CJ030C50PT	C316	1
TX VCO UNIT/460	CHIP CAPACITOR	GRM40B102K50PT	C317	1
TX VCO UNIT/460	CHIP ELECTROLYT	MVK16VC10M D55	C318	1
TX VCO UNIT/460	CHIP ELECTROLYT	MVK16VC10M D55	C319	1
TX VCO UNIT/460	CHIP CAPACITOR	GRM40B102K50PT	C320	1
TX VCO UNIT/460	CHIP CAPACITOR	GRM40CH100D50PT	C321	1
TX VCO UNIT/460	CHIP CAPACITOR	GRM40B471K50PT	C322	1
TX VCO UNIT/460	CHIP CAPACITOR	GRM40B102K50PT	C323	1

TX VCO UNIT/460	CHIP ELECTROLYT	MVK16VC10M D55	C324	1
TX VCO UNIT/460	CHIP CAPACITOR	GRM40B102K50PT	C325	1
TX VCO UNIT/460	CHIP CAPACITOR	GRM40CH101J50PT	C326	1
TX VCO UNIT/460	CONNECTOR	LPC-6T7M	CP301	1
TX VCO UNIT/460	CONNECTOR	LPC-2T7M	CP302	1
TX VCO UNIT/460	CHIP DIODE	1SV229-TPH3	D301	1
TX VCO UNIT/460	CHIP DIODE	1SV232-TPH3	D303	1
TX VCO UNIT/460	CHIP DIODE	1SV232-TPH3	D304	1
TX VCO UNIT/460	CHIP DIODE	1SS355	D307	1
TX VCO UNIT/460	CHIP DIODE	1SS356-TW11	D308	1
TX VCO UNIT/460	CHIP ZENNER DIODE	UDZ2.0B-TE17	D309	1
TX VCO UNIT/460	CHIP ZENNER DIODE	UDZ2.0B-TE17	D310	1
TX VCO UNIT/460	CHIP INDUCTOR	ELJ-NCR47KF	L301	1
TX VCO UNIT/460	CHIP COIL	KQ1008TER47K	L302	1
TX VCO UNIT/460	CHIP COIL	#3078	L303	1
TX VCO UNIT/460	CHIP COIL	KQ1008TER47K	L304	1
TX VCO UNIT/460	CHIP INDUCTOR	ELJ-NCR22KF	L305	1
TX VCO UNIT/460	CHIP COIL	LL2012-F22NK	L306	1
TX VCO UNIT/460	CHIP RESISTOR	MCR10EZHJ150	L307	1
TX VCO UNIT/460	CHIP COIL	#1091(R12-H510Y)	L308	1
TX VCO UNIT/460	CHIP FET	2SK508-T1B-K53	Q301	1
TX VCO UNIT/460	CHIP TRANSISTOR	2SC4325-TE85R	Q302	1
TX VCO UNIT/460	CHIP TRANSISTOR	2SC3583-T1B-R34	Q303	1
TX VCO UNIT/460	CHIP TRANSISTOR	DTA124EKA-T107	Q304	1
TX VCO UNIT/460	CHIP TRANSISTOR	2SD2351-T106	Q305	1
TX VCO UNIT/460	CHIP TRANSISTOR	DTA124EKA-T107	Q306	1
TX VCO UNIT/460	CHIP RESISTOR	MCR10EZHJ473	R301	1
TX VCO UNIT/460	CHIP RESISTOR	MCR10EZHJ563	R303	1
TX VCO UNIT/460	CHIP CAPACITOR	GRM40CJ030C50PT	R305	1
TX VCO UNIT/460	CHIP RESISTOR	MCR10EZHJ150	R306	1
TX VCO UNIT/460	CHIP RESISTOR	MCR10EZHJ221	R307	1
TX VCO UNIT/460	CHIP RESISTOR	MCR10EZHJ472	R308	1
TX VCO UNIT/460	CHIP RESISTOR	MCR10EZHJ472	R309	1
TX VCO UNIT/460	CHIP RESISTOR	MCR10EZHJ471	R310	1
TX VCO UNIT/460	CHIP RESISTOR	MCR10EZHJ471	R311	1
TX VCO UNIT/460	CHIP RESISTOR	MCR10EZHJ101	R312	1
TX VCO UNIT/460	CHIP RESISTOR	MCR10EZHJ103	R313	1
TX VCO UNIT/460	CHIP RESISTOR	MCR10EZHJ222	R314	1
TX VCO UNIT/460	CHIP RESISTOR	MCR10EZHJ472	R315	1
TX VCO UNIT/460	CHIP RESISTOR	MCR10EZHJ332	R316	1
TX VCO UNIT/460	CHIP RESISTOR	MCR10EZHJ102	R317	1
TX VCO UNIT/460	CHIP RESISTOR	MCR10EZHJ560	R318	1
TX VCO UNIT/460	CHIP RESISTOR	MCR10EZHJ4R7	R319	1
TX VCO UNIT/460	CHIP RESISTOR	MCR10EZHJ821	R320	1
TX VCO UNIT/460	CHIP RESISTOR	MCR10EZHJ150	R321	1
TX VCO UNIT/460	CHIP CAPACITOR	GRM40B102K50PT	R322	1
TX VCO UNIT/460	CHIP RESISTOR	MCR10EZHJ470	R323	1
TX VCO UNIT/460	CHIP RESISTOR	MCR10EZHJ473	R324	1
TX VCO UNIT/460	CHIP RESISTOR	MCR10EZHJ154	R325	1
TX VCO UNIT/460	CHIP CHECKER	RCT	TP301	1
TX VCO UNIT/460	P.C.B.	51VCU86-1□1/4□		1
TX VCO UNIT/460	VCO COVER	4A10-2170		1
TX VCO UNIT/460	VCO SHIELD	4A10-3029		1
TX VCO UNIT/460	VCO SHIELD CASE	4A10-2169		1
RX MAIN UNIT/460	RF BPF □□□	#3094	BP101	1
RX MAIN UNIT/460	RF BPF □□□	#3094	BP102	1
RX MAIN UNIT/460	BPF SPRING	4A10-3041	BPF	2
RX MAIN UNIT/460	BPF BOTTOM	3A10-0576	BPF	2
RX MAIN UNIT/460	SCREW BIND	BD-2 X 6	BPF	4
RX MAIN UNIT/460	CHIP IC	MB1511PFV-G-BND-EF	IC101	1
RX MAIN UNIT/460	CHIP IC	NJU7662M-T1	IC102	1
RX MAIN UNIT/460	CHIP IC	BU4S66-TR	IC103	1
RX MAIN UNIT/460	CHIP IC	AN78L05M	IC104	1
RX MAIN UNIT/460	CHIP IC	TA75S01F-TE85R	IC105	1
RX MAIN UNIT/460	CHIP IC	TA75S558F-TE85R	IC107	1
RX MAIN UNIT/460	CHIP IC	TA78M05F-TE16L	IC108	1
RX MAIN UNIT/460	CHIP COIL	FBMH3216HM501NT	BL101	1
RX MAIN UNIT/460	CHIP COIL	BLM21B421SPT	BL102	1
RX MAIN UNIT/460	CHIP COIL	BLM21B421SPT	BL103	1
RX MAIN UNIT/460	CHIP COIL	FBMH3216HM501NT	BL104	1
RX MAIN UNIT/460	CHIP CAPACITOR	GRM40CH040C50PT	C101	1

RX MAIN UNIT/460	CHIP RESISTOR	MCR10EZHJ272	C102	1
RX MAIN UNIT/460	CHIP CAPACITOR	GRM40CH040C50PT	C103	1
RX MAIN UNIT/460	CHIP CAPACITOR	GRM40B471K50PT	C104	1
RX MAIN UNIT/460	CHIP CAPACITOR	GRM40B102K50PT	C106	1
RX MAIN UNIT/460	CHIP CAPACITOR	GRM40B472K50PT	C107	1
RX MAIN UNIT/460	CHIP CAPACITOR	GRM40B471K50PT	C108	1
RX MAIN UNIT/460	CHIP CAPACITOR	GRM40B102K50PT	C109	1
RX MAIN UNIT/460	CHIP CAPACITOR	GRM40CH101J50PT	C110	1
RX MAIN UNIT/460	CHIP CAPACITOR	GRM40B471K50PT	C111	1
RX MAIN UNIT/460	CHIP CAPACITOR	GRM40B102K50PT	C112	1
RX MAIN UNIT/460	CHIP CAPACITOR	GRM40B102K50PT	C115	1
RX MAIN UNIT/460	CHIP CAPACITOR	GRM40B472K50PT	C116	1
RX MAIN UNIT/460	CHIP CAPACITOR	GRM40B471K50PT	C117	1
RX MAIN UNIT/460	CHIP CAPACITOR	GRM40B102K50PT	C118	1
RX MAIN UNIT/460	CHIP CAPACITOR	GRM40CH101J50PT	C119	1
RX MAIN UNIT/460	CHIP CAPACITOR	GRM40B471K50PT	C120	1
RX MAIN UNIT/460	CHIP CAPACITOR	GRM40B102K50PT	C121	1
RX MAIN UNIT/460	CHIP CAPACITOR	GRM40CH060D50PT	C122	1
RX MAIN UNIT/460	CHIP CAPACITOR	GRM40CK010C50PT	C124	1
RX MAIN UNIT/460	CHIP CAPACITOR	GRM40CH101J50PT	C125	1
RX MAIN UNIT/460	CHIP CAPACITOR	GRM40CH220J50PT	C126	1
RX MAIN UNIT/460	CHIP CAPACITOR	GRM40CH200J50PT	C127	1
RX MAIN UNIT/460	CHIP CAPACITOR	GRM40B102K50PT	C128	1
RX MAIN UNIT/460	CHIP CAPACITOR	GRM40B102K50PT	C129	1
RX MAIN UNIT/460	CHIP CAPACITOR	GRM40CH330J50PT	C130	1
RX MAIN UNIT/460	CHIP TANTALUM	ECST1CY105R	C131	1
RX MAIN UNIT/460	CHIP CAPACITOR	GRM40CH040C50PT	C132	1
RX MAIN UNIT/460	CHIP CAPACITOR	GRM40B102K50PT	C133	1
RX MAIN UNIT/460	CHIP CAPACITOR	GRM40B473K25PT	C134	1
RX MAIN UNIT/460	CHIP CAPACITOR	GRM40CH040C50PT	C135	1
RX MAIN UNIT/460	CHIP RESISTOR	MCR10EZHJ272	C136	1
RX MAIN UNIT/460	CHIP CAPACITOR	GRM40B473K25PT	C137	1
RX MAIN UNIT/460	CHIP TANTALUM	ECST1AY475R	C138	1
RX MAIN UNIT/460	CHIP ELECTROLYT	MVK16VC10M D55	C139	1
RX MAIN UNIT/460	CHIP CAPACITOR	GRM40B473K25PT	C140	1
RX MAIN UNIT/460	CHIP TANTALUM	ECST1VY154R	C141	1
RX MAIN UNIT/460	CHIP CAPACITOR	GRM40CH101J50PT	C142	1
RX MAIN UNIT/460	CHIP CAPACITOR	GRM40CH050C50PT	C143	1
RX MAIN UNIT/460	CHIP ELECTROLYT	MVK16VC10M D55	C145	1
RX MAIN UNIT/460	CHIP ELECTROLYT	MVK16VC10M D55	C146	1
RX MAIN UNIT/460	CHIP ELECTROLYT	MVK16VC10M D55	C147	1
RX MAIN UNIT/460	CHIP ELECTROLYT	MVK16VC10M D55	C148	1
RX MAIN UNIT/460	CHIP ELECTROLYT	MVK16VC10M D55	C149	1
RX MAIN UNIT/460	CHIP CAPACITOR	GRM40B153K50PT	C150	1
RX MAIN UNIT/460	CHIP CAPACITOR	GRM42-6B105K16NPT	C151	1
RX MAIN UNIT/460	CHIP CAPACITOR	GRM40B473K25PT	C152	1
RX MAIN UNIT/460	CHIP CAPACITOR	GRM40B104K25PT	C153	1
RX MAIN UNIT/460	CHIP TANTALUM	ECST1CY105R	C155	1
RX MAIN UNIT/460	CHIP ELECTROLYT	MVK16VC10M D55	C156	1
RX MAIN UNIT/460	CHIP TANTALUM	ECST1CY225R	C157	1
RX MAIN UNIT/460	CHIP CAPACITOR	GRM40B153K50PT	C166	1
RX MAIN UNIT/460	CHIP CAPACITOR	GRM40B153K50PT	C187	1
RX MAIN UNIT/460	CHIP CAPACITOR	GRM40B103K50PT	C188	1
RX MAIN UNIT/460	CHIP CAPACITOR	GRM40B222K50PT	C189	1
RX MAIN UNIT/460	CORD	4A-S587	CN101	1
RX MAIN UNIT/460	CONNECTOR	52030-1610	CN202	1
RX MAIN UNIT/460	CONNECTOR	LPC-6FDS	CS101	1
RX MAIN UNIT/460	CONNECTOR	LPC-2FDS	CS102	1
RX MAIN UNIT/460	CONNECTOR	LPC-2FDS	CS103	1
RX MAIN UNIT/460	CONNECTOR	LPC-6FDS	CS104	1
RX MAIN UNIT/460	CHIP DIODE	HVU131TRF	D101	1
RX MAIN UNIT/460	CHIP DIODE	HVU131TRF	D102	1
RX MAIN UNIT/460	CHIP DIODE	1SS271-TE85R	D107	1
RX MAIN UNIT/460	CHIP DIODE	1SS271-TE85R	D108	1
RX MAIN UNIT/460	CHIP DIODE	RB501V-40TE-17	D109	1
RX MAIN UNIT/460	CHIP DIODE	1SS355	D110	1
RX MAIN UNIT/460	CHIP DIODE	1SS355	D111	1
RX MAIN UNIT/460	CHIP DIODE	DA204U-T106	D112	1
RX MAIN UNIT/460	CHIP DIODE	DA204U-T106	D113	1
RX MAIN UNIT/460	CHIP DIODE	1SS355	D114	1
RX MAIN UNIT/460	CHIP ZENNER DIODE	UDZ2.4B-TE17	D118	1

RX MAIN UNIT/460	CHIP DIODE	SML210-VT-T86	D119	1
RX MAIN UNIT/460	SPRING	4A10-2200	GNB	3
RX MAIN UNIT/460	JUMPER PLUG	DIC-149-3P	J101	1
RX MAIN UNIT/460	JUMPER SOCKET	DIC-128	JS	1
RX MAIN UNIT/460	CHIP INDUCTOR	LQN1A8N8J04	L101	1
RX MAIN UNIT/460	CHIP COIL	LL2012-F15NK	L102	1
RX MAIN UNIT/460	CHIP INDUCTOR	LQN1AR10J04	L103	1
RX MAIN UNIT/460	CHIP COIL	LL2012-F10NK	L104	1
RX MAIN UNIT/460	CHIP COIL	LL2012-F47NK	L105	1
RX MAIN UNIT/460	CHIP INDUCTOR	LQN1AR10J04	L106	1
RX MAIN UNIT/460	CHIP COIL	LL2012-F33NK	L107	1
RX MAIN UNIT/460	CHIP RESISTOR	MCR10EZHJ150	L108	1
RX MAIN UNIT/460	CHIP INDUCTOR	LQN1AR10J04	L109	1
RX MAIN UNIT/460	CHIP INDUCTOR	NL322522TR56J	L110	1
RX MAIN UNIT/460	CHIP INDUCTOR	ELJ-FC4R7KF	L111	1
RX MAIN UNIT/460	CHIP INDUCTOR	NL322522TR68J	L112	1
RX MAIN UNIT/460	CHIP RESISTOR	LL2012-F22NK	L113	1
RX MAIN UNIT/460	CHIP INDUCTOR	ELJ-FC1R0MF	L114	1
RX MAIN UNIT/460	TCXO(510UHF)	VT20P-08	OS101	1
RX MAIN UNIT/460	SCREW SEMS	SE-3 X 6	PCB	6
RX MAIN UNIT/460	SCREW SEMS	SE-3 X 8	COVER	6
RX MAIN UNIT/460	CHIP TRANSISTOR	3SK177-T1-U72	Q101	1
RX MAIN UNIT/460	CHIP FET	2SK508-T1B-K53	Q103	1
RX MAIN UNIT/460	CHIP TRANSISTOR	DTB143EK-T146	Q104	1
RX MAIN UNIT/460	CHIP TRANSISTOR	2SD2351-T106	Q107	1
RX MAIN UNIT/460	CHIP TRANSISTOR	2SJ-166-T1B	Q108	1
RX MAIN UNIT/460	CHIP TRANSISTOR	2SK3018-T106	Q109	1
RX MAIN UNIT/460	CHIP TRANSISTOR	2SK3018-T106	Q110	1
RX MAIN UNIT/460	CHIP TRANSISTOR	UMC2-TR	Q111	1
RX MAIN UNIT/460	CHIP TRANSISTOR	UMC2-TR	Q112	1
RX MAIN UNIT/460	CHIP TRANSISTOR	DTA144EUA-T106	Q117	1
RX MAIN UNIT/460	CHIP TRANSISTOR	DTB143EK-T146	Q118	1
RX MAIN UNIT/460	CHIP TRANSISTOR	DTC114EKA-T146	Q119	1
RX MAIN UNIT/460	CHIP TRANSISTOR	2SK3018-T106	Q120	1
RX MAIN UNIT/460	CHIP RESISTOR	MCR10EZHJ103	R101	1
RX MAIN UNIT/460	CHIP RESISTOR	MCR10EZHJ821	R102	1
RX MAIN UNIT/460	CHIP RESISTOR	MCR10EZHJ472	R103	1
RX MAIN UNIT/460	CHIP RESISTOR	MCR10EZHJ103	R104	1
RX MAIN UNIT/460	CHIP RESISTOR	MCR10EZHJ153	R105	1
RX MAIN UNIT/460	CHIP RESISTOR	MCR10EZHJ121	R106	1
RX MAIN UNIT/460	CHIP CAPACITOR	GRM40CKR75C50PT	R107	1
RX MAIN UNIT/460	CHIP RESISTOR	MCR10EZHJ470	R108	1
RX MAIN UNIT/460	CHIP RESISTOR	MCR10EZHJ000	R110	1
RX MAIN UNIT/460	CHIP RESISTOR	MCR10EZHJ821	R111	1
RX MAIN UNIT/460	CHIP RESISTOR	MCR10EZHJ472	R112	1
RX MAIN UNIT/460	CHIP RESISTOR	MCR10EZHJ103	R113	1
RX MAIN UNIT/460	CHIP RESISTOR	MCR10EZHJ153	R114	1
RX MAIN UNIT/460	CHIP RESISTOR	MCR10EZHJ121	R115	1
RX MAIN UNIT/460	CHIP CAPACITOR	GRM40CKR75C50PT	R116	1
RX MAIN UNIT/460	CHIP RESISTOR	MCR10EZHJ470	R117	1
RX MAIN UNIT/460	CHIP RESISTOR	MCR10EZHJ821	R118	1
RX MAIN UNIT/460	CHIP RESISTOR	MCR10EZHJ151	R119	1
RX MAIN UNIT/460	CHIP RESISTOR	MCR10EZHJ560	R121	1
RX MAIN UNIT/460	CHIP RESISTOR	MCR10EZHJ103	R122	1
RX MAIN UNIT/460	CHIP RESISTOR	MCR10EZHJ101	R123	1
RX MAIN UNIT/460	CHIP RESISTOR	MCR10EZHJ822	R124	1
RX MAIN UNIT/460	CHIP RESISTOR	MCR10EZHJ104	R125	1
RX MAIN UNIT/460	CHIP RESISTOR	MCR10EZHJ393	R126	1
RX MAIN UNIT/460	CHIP RESISTOR	MCR10EZHJ104	R127	1
RX MAIN UNIT/460	CHIP RESISTOR	MCR10EZHJ682	R128	1
RX MAIN UNIT/460	CHIP RESISTOR	MCR10EZHJ473	R129	1
RX MAIN UNIT/460	CHIP RESISTOR	MCR10EZHJ104	R130	1
RX MAIN UNIT/460	CHIP RESISTOR	MCR10EZHJ100	R131	1
RX MAIN UNIT/460	CHIP RESISTOR	MCR10EZHJ103	R132	1
RX MAIN UNIT/460	CHIP RESISTOR	MCR10EZHJ103	R133	1
RX MAIN UNIT/460	CHIP RESISTOR	MCR10EZHJ103	R134	1
RX MAIN UNIT/460	CHIP RESISTOR	MCR10EZHJ100	R135	1
RX MAIN UNIT/460	CHIP RESISTOR	MCR10EZHJ392	R136	1
RX MAIN UNIT/460	CHIP RESISTOR	MCR10EZHJ103	R137	1
RX MAIN UNIT/460	CHIP RESISTOR	MCR10EZHJ103	R138	1
RX MAIN UNIT/460	CHIP RESISTOR	MCR10EZHJ103	R139	1

RX MAIN UNIT/460	CHIP RESISTOR	MCR10EZHJ472	R140	1
RX MAIN UNIT/460	CHIP RESISTOR	MCR10EZHJ472	R141	1
RX MAIN UNIT/460	CHIP RESISTOR	MCR10EZHJ273	R144	1
RX MAIN UNIT/460	CHIP RESISTOR	MCR10EZHJ183	R145	1
RX MAIN UNIT/460	CHIP RESISTOR	MCR10EZHJ472	R146	1
RX MAIN UNIT/460	CHIP RESISTOR	MCR10EZHJ101	R148	1
RX MAIN UNIT/460	CHIP RESISTOR	MCR10EZHJ104	R149	1
RX MAIN UNIT/460	CHIP RESISTOR	MCR10EZHJ470	R150	1
RX MAIN UNIT/460	CHIP RESISTOR	MCR10EZHJ470	R151	1
RX MAIN UNIT/460	CHIP RESISTOR	MCR10EZHJ393	R152	1
RX MAIN UNIT/460	CHIP RESISTOR	MCR10EZHJ102	R153	1
RX MAIN UNIT/460	CHIP RESISTOR	MCR10EZHJ102	R154	1
RX MAIN UNIT/460	CHIP RESISTOR	MCR10EZHJ272	R155	1
RX MAIN UNIT/460	CHIP RESISTOR	MCR10EZHJ473	R157	1
RX MAIN UNIT/460	CHIP RESISTOR	MCR10EZHJ471	R158	1
RX MAIN UNIT/460	CHIP RESISTOR	MCR10EZHJ104	R183	1
RX MAIN UNIT/460	CHIP RESISTOR	MCR10EZHJ103	R184	1
RX MAIN UNIT/460	CHIP RESISTOR	MCR10EZHJ473	R185	1
RX MAIN UNIT/460	CHIP RESISTOR	MCR10EZHJ472	R186	1
RX MAIN UNIT/460	CHIP RESISTOR	MCR10EZHJ103	R187	1
RX MAIN UNIT/460	CHIP RESISTOR	MCR10EZHJ104	R188	1
RX MAIN UNIT/460	CHIP RESISTOR	MCR10EZHJ332	R189	1
RX MAIN UNIT/460	CHIP COIL	#3060	T101	1
RX MAIN UNIT/460	CHIP COIL	#3060	T102	1
RX MAIN UNIT/460	COIL	M7-T1(31302)	T103	1
RX MAIN UNIT/460	CRYSTAL FILTER	48S15A	XF101	1
RX MAIN UNIT/460	BOSS	4A10-3000		2
RX MAIN UNIT/460	MIX SHIELD CASE	4A10-2171		1
RX MAIN UNIT/460	P.C.B.	51RXU86-3□1/2□		1
RX MAIN UNIT/460	RX COVER	4A10-2994		1
RX MAIN UNIT/460	RX SEAL	4A10-3040		1
RX MAIN UNIT/460	TX/RX FRAME	2A10-0210		1
RX VCO UNIT/460	CHIP IC	UPC1688G-T1	IC301	1
RX VCO UNIT/460	CHIP COIL	FBMH3216HM501NT	BL301	1
RX VCO UNIT/460	CHIP COIL	BLM21B421SPT	BL302	1
RX VCO UNIT/460	CHIP CAPACITOR	GRM40B823K25PT	C302	1
RX VCO UNIT/460	CHIP CAPACITOR	GRM40CH040C50PT	C303	1
RX VCO UNIT/460	CHIP CAPACITOR	GRM40CH150J50PT	C305	1
RX VCO UNIT/460	CHIP CAPACITOR	GRM40CH020C50PT	C307	1
RX VCO UNIT/460	CHIP CAPACITOR	GRM40CH060D50PT	C308	1
RX VCO UNIT/460	CHIP CAPACITOR	GRM40CJ030C50PT	C309	1
RX VCO UNIT/460	CHIP CAPACITOR	GRM40CJ030C50PT	C310	1
RX VCO UNIT/460	CHIP CAPACITOR	GRM40CKR75C50PT	C311	1
RX VCO UNIT/460	CHIP CAPACITOR	GRM40B102K50PT	C312	1
RX VCO UNIT/460	CHIP CAPACITOR	GRM40B102K50PT	C313	1
RX VCO UNIT/460	CHIP CAPACITOR	GRM40CH050C50PT	C314	1
RX VCO UNIT/460	CHIP CAPACITOR	GRM40CK1R5C50PT	C315	1
RX VCO UNIT/460	CHIP CAPACITOR	GRM40CH050C50PT	C316	1
RX VCO UNIT/460	CHIP CAPACITOR	GRM40B102K50PT	C317	1
RX VCO UNIT/460	CHIP ELECTROLYT	MVK16VC10M D55	C318	1
RX VCO UNIT/460	CHIP ELECTROLYT	MVK16VC10M D55	C319	1
RX VCO UNIT/460	CHIP CAPACITOR	GRM40B102K50PT	C320	1
RX VCO UNIT/460	CHIP CAPACITOR	GRM40CH100D50PT	C321	1
RX VCO UNIT/460	CHIP CAPACITOR	GRM40B471K50PT	C322	1
RX VCO UNIT/460	CHIP CAPACITOR	GRM40B102K50PT	C323	1
RX VCO UNIT/460	CHIP ELECTROLYT	MVK16VC10M D55	C324	1
RX VCO UNIT/460	CHIP CAPACITOR	GRM40B102K50PT	C325	1
RX VCO UNIT/460	CHIP CAPACITOR	GRM40CH101J50PT	C326	1
RX VCO UNIT/460	CHIP CAPACITOR	GRM40CJ030C50PT	C327	1
RX VCO UNIT/460	CONNECTOR	LPC-6T7M	CP301	1
RX VCO UNIT/460	CONNECTOR	LPC-2T7M	CP302	1
RX VCO UNIT/460	CHIP DIODE	1SV232-TPH3	D303	1
RX VCO UNIT/460	CHIP DIODE	1SV232-TPH3	D304	1
RX VCO UNIT/460	CHIP DIODE	1SS355	D307	1
RX VCO UNIT/460	CHIP DIODE	1SS356-TW11	D308	1
RX VCO UNIT/460	CHIP ZENNER DIODE	UDZ2.0B-TE17	D309	1
RX VCO UNIT/460	CHIP ZENNER DIODE	UDZ2.0B-TE17	D310	1
RX VCO UNIT/460	CHIP INDUCTOR	ELJ-NCR47KF	L301	1
RX VCO UNIT/460	CHIP COIL	KQ1008TER47K	L302	1
RX VCO UNIT/460	CHIP COIL	#3078	L303	1
RX VCO UNIT/460	CHIP COIL	KQ1008TER47K	L304	1

RX VCO UNIT/460	CHIP INDUCTOR	ELJ-NCR22KF	L305	1
RX VCO UNIT/460	CHIP COIL	LL2012-F22NK	L306	1
RX VCO UNIT/460	CHIP COIL	LL2012-F22NK	L307	1
RX VCO UNIT/460	CHIP COIL	#1091	L308	1
RX VCO UNIT/460	CHIP FET	2SK508-T1B-K53	Q301	1
RX VCO UNIT/460	CHIP TRANSISTOR	2SC4325-TE85R	Q302	1
RX VCO UNIT/460	CHIP TRANSISTOR	2SC3583-T1B-R34	Q303	1
RX VCO UNIT/460	CHIP TRANSISTOR	DTA124EKA-T107	Q304	1
RX VCO UNIT/460	CHIP TRANSISTOR	2SD2351-T106	Q305	1
RX VCO UNIT/460	CHIP TRANSISTOR	DTA124EKA-T107	Q306	1
RX VCO UNIT/460	CHIP RESISTOR	MCR10EZHJ150	R306	1
RX VCO UNIT/460	CHIP RESISTOR	MCR10EZHJ221	R307	1
RX VCO UNIT/460	CHIP RESISTOR	MCR10EZHJ472	R308	1
RX VCO UNIT/460	CHIP RESISTOR	MCR10EZHJ472	R309	1
RX VCO UNIT/460	CHIP RESISTOR	MCR10EZHJ471	R310	1
RX VCO UNIT/460	CHIP RESISTOR	MCR10EZHJ471	R311	1
RX VCO UNIT/460	CHIP RESISTOR	MCR10EZHJ101	R312	1
RX VCO UNIT/460	CHIP RESISTOR	MCR10EZHJ222	R314	1
RX VCO UNIT/460	CHIP RESISTOR	MCR10EZHJ472	R315	1
RX VCO UNIT/460	CHIP RESISTOR	MCR10EZHJ332	R316	1
RX VCO UNIT/460	CHIP RESISTOR	MCR10EZHJ102	R317	1
RX VCO UNIT/460	CHIP RESISTOR	MCR10EZHJ470	R318	1
RX VCO UNIT/460	CHIP RESISTOR	MCR10EZHJ4R7	R319	1
RX VCO UNIT/460	CHIP RESISTOR	MCR10EZHJ821	R320	1
RX VCO UNIT/460	CHIP RESISTOR	MCR10EZHJ150	R321	1
RX VCO UNIT/460	CHIP RESISTOR	MCR10EZHJ103	R322	1
RX VCO UNIT/460	CHIP RESISTOR	MCR10EZHJ101	R323	1
RX VCO UNIT/460	CHIP CHECKER	RCT	TP301	1
RX VCO UNIT/460	P.C.B.	51VCU86-1□1/4□		1
RX VCO UNIT/460	VCO COVER	4A10-2170		1
RX VCO UNIT/460	VCO SHIELD	4A10-3029		1
RX VCO UNIT/460	VCO SHIELD CASE	4A10-2169		1
PA UNIT/460	POWERMODULE	M57704H	PM501	1
PA UNIT/460	CHIP IC	BAM4558F	IC501	1
PA UNIT/460	CHIP IC	TA75S01F-TE85R	IC502	1
PA UNIT/460	CHIP IC	M5237ML-600C	IC503	1
PA UNIT/460	CHIP IC	AN78L05M	IC504	1
PA UNIT/460	FERRITE CORE	OP3.5-3.5-1.2H	BC501	1
PA UNIT/460	CHIP COIL	FBMJ3216HM600-T	BL502	1
PA UNIT/460	COIL LEAD CHOKE	FBA04VA900KF	BL505	1
PA UNIT/460	COIL LEAD CHOKE	FBA04VA900KF	BL506	1
PA UNIT/460	CHIP COIL	FBMH3216HM501NT	BL507	1
PA UNIT/460	CHIP COIL	FBMH3216HM501NT	BL508	1
PA UNIT/460	COIL LEAD CHOKE	FBA04VA900KF	BL509	1
PA UNIT/460	CHIP COIL	FBMH3216HM501NT	BL510	1
PA UNIT/460	COIL LEAD CHOKE	FBA04VA900KF	BL511	1
PA UNIT/460	COIL LEAD CHOKE	FBA04VA900KF	BL512	1
PA UNIT/460	COIL LEAD CHOKE	FBA04VA600KD	BL513	1
PA UNIT/460	COIL LEAD CHOKE	FBA04VA900KF	BL514	1
PA UNIT/460	COIL LEAD CHOKE	FBA04VA900KF	BL515	1
PA UNIT/460	CHIP CAPACITOR	GRM40B471K50PT	C501	1
PA UNIT/460	CHIP CAPACITOR	GRM40B102K50PT	C502	1
PA UNIT/460	CHIP CAPACITOR	GRM40B471K50PT	C503	1
PA UNIT/460	CHIP CAPACITOR	GRM40B102K50PT	C504	1
PA UNIT/460	CHIP CAPACITOR	GRM40B102K50PT	C505	1
PA UNIT/460	CHIP CAPACITOR	GRM40B102K50PT	C506	1
PA UNIT/460	CHIP CAPACITOR	GRM40B103K50PT	C507	1
PA UNIT/460	CHIP MICA	UC232H0060D	C508	1
PA UNIT/460	CHIP MICA	UC232H0070D	C510A	1
PA UNIT/460	CHIP MICA	UC232H0080D	C510B	1
PA UNIT/460	CHIP MICA	UC232H0080D	C512	1
PA UNIT/460	CHIP MICA	UC232H0330J	C513	1
PA UNIT/460	CHIP MICA	UC232H0330J	C514	1
PA UNIT/460	MICA C.	RM40A2H270J	C515	1
PA UNIT/460	MICA C.	RM40A2H270J	C516	1
PA UNIT/460	MICA C.	RM40A2H120J	C517	1
PA UNIT/460	MICA C.	RM40A2H120J	C518	1
PA UNIT/460	MICA C.	RM40A2H050J	C519	1
PA UNIT/460	CHIP MICA	UC232H0080D	C520A	1
PA UNIT/460	CHIP MICA	UC232H0100D	C520B	1
PA UNIT/460	CHIP MICA	UC232H0050D	C522	1

PA UNIT/460	CHIP CAPACITOR	GRM40CKR75C50PT	C524	1
PA UNIT/460	CHIP CAPACITOR	GRM40B102K50PT	C525	1
PA UNIT/460	CHIP CAPACITOR	GRM40B102K50PT	C526	1
PA UNIT/460	CHIP CAPACITOR	GRM40B102K50PT	C527	1
PA UNIT/460	CHIP CAPACITOR	GRM40B102K50PT	C528	1
PA UNIT/460	CHIP CAPACITOR	GRM40B102K50PT	C529	1
PA UNIT/460	CHIP CAPACITOR	GRM40B102K50PT	C530	1
PA UNIT/460	MICA C.	RM40A2H050J	C532	1
PA UNIT/460	MICA C.	RM40A2H100J	C533	1
PA UNIT/460	MICA C.	RM40A2H100J	C534	1
PA UNIT/460	MICA C.	RM40A2H050J	C535	1
PA UNIT/460	AXIAL LEAD	UP050SL010M/NAC	C536	2
PA UNIT/460	AXIAL LEAD	UP050SL010M/NAC	C537	1
PA UNIT/460	CHIP MICA	UC232H0020D	C538	1
PA UNIT/460	CHIP CAPACITOR	GRM40B102K50PT	C540	1
PA UNIT/460	CHIP ELECTROLYT	MVK35VC4R7M D55	C541	1
PA UNIT/460	CHIP CAPACITOR	GRM40B103K50PT	C542	1
PA UNIT/460	CHIP CAPACITOR	GRM40B471K50PT	C543	1
PA UNIT/460	CHIP MICA	UC342H4700J	C544	1
PA UNIT/460	CHIP CAPACITOR	GRM40B102K50PT	C545	1
PA UNIT/460	CHIP TANTALUM	ECST1VY224R	C546	1
PA UNIT/460	CHIP CAPACITOR	GRM40B102K50PT	C547	1
PA UNIT/460	CHIP CAPACITOR	GRM40B102K50PT	C548	1
PA UNIT/460	CHIP CAPACITOR	GRM40B102K50PT	C549	1
PA UNIT/460	CHIP CAPACITOR	GRM40B104K25PT	C550	1
PA UNIT/460	CHIP ELECTROLYT	MVK25VC33M F55	C552	1
PA UNIT/460	CHIP CAPACITOR	GRM40B104K25PT	C553	1
PA UNIT/460	CHIP ELECTROLYT	MVK25VC33M F55	C554	1
PA UNIT/460	CHIP TANTALUM	ECST1CY225R	C556	1
PA UNIT/460	CHIP TANTALUM	ECST1CY105R	C557	1
PA UNIT/460	CHIP MICA	UC232H01R5D	C558	1
PA UNIT/460	CHIP CAPACITOR	GRM40B104K25PT	C561	1
PA UNIT/460	CONNECTOR	SM551	CN501	1
PA UNIT/460	CONNECTOR	4A-S588	CN502	1
PA UNIT/460	CONNECTOR	SB20-03WS	CN504	1
PA UNIT/460	CHIP DIODE	RB161L-40TE25	D502	1
PA UNIT/460	CHIP DIODE	RB501V-40TE-17	D503	1
PA UNIT/460	CHIP DIODE	RB501V-40TE-17	D504	1
PA UNIT/460	CHIP DIODE	RB501V-40TE-17	D505	1
PA UNIT/460	CHIP ZENNER DIODE	UDZ2.4B-TE17	D506	1
PA UNIT/460	CHIP DIODE	1SS355	D507	1
PA UNIT/460	CHIP DIODE	1SS355	D508	1
PA UNIT/460	CHIP DIODE	1SS355	D509	1
PA UNIT/460	CHIP DIODE	SML210-VT-T86	D510	1
PA UNIT/460	CHIP DIODE	1SS355	D511	1
PA UNIT/460	THROUCH C.	1HB340YE102PDA05	FVC501	1
PA UNIT/460	VR □□□	TC-6S 18P	FVC502	1
PA UNIT/460	VR □□□	TC-6S 18P	FVC503	1
PA UNIT/460	CHIP VARICAP	EVM-7JSX30B22	FVR501	1
PA UNIT/460	CHIP VR	G3AT 2K	FVR502	1
PA UNIT/460	CHIP VR	G3AT 2K	FVR503	1
PA UNIT/460	CHIP VARICAP	EVM-7JSX30B15	FVR504	1
PA UNIT/460	COIL □□□	4A-S589	L501	1
PA UNIT/460	COIL □□□	4A-S590	L502	1
PA UNIT/460	COIL □□□	4A-S592	L503	1
PA UNIT/460	COIL □□□	4A-S593	L504	1
PA UNIT/460	COIL □□□	4A-S592	L505	1
PA UNIT/460	COIL □□□	4A-S591	L506	1
PA UNIT/460	TRANSISTOR	2SC3102	Q501	1
PA UNIT/460	CHIP TRANSISTOR	DTC124EKA-T146	Q502	1
PA UNIT/460	CHIP TRANSISTOR	DTB143EK-T146	Q503	1
PA UNIT/460	CHIP TRANSISTOR	2SC2412K	Q504	1
PA UNIT/460	TRANSISTOR	2SB1018A	Q505	1
PA UNIT/460	TRANSISTOR	2SD2352	Q506	1
PA UNIT/460	CHIP TRANSISTOR	2SK2731-T146	Q507	1
PA UNIT/460	CHIP RESISTOR	MCR10EZHJ182	R501	1
PA UNIT/460	CHIP RESISTOR	MCR10EZHJ4R7	R503	1
PA UNIT/460	CHIP RESISTOR	MCR50EZHJ000	R507	1
PA UNIT/460	CHIP RESISTOR	MCR10EZHJ182	R508	1
PA UNIT/460	CHIP RESISTOR	MCR10EZHJ151	R509	1
PA UNIT/460	CHIP RESISTOR	MCR10EZHJ103	R510	1

PA UNIT/460	CHIP RESISTOR	MCR10EZHJ103	R511	1
PA UNIT/460	CHIP RESISTOR	MCR10EZHJ103	R512	1
PA UNIT/460	CHIP RESISTOR	MCR10EZHJ471	R513	1
PA UNIT/460	CHIP RESISTOR	MCR10EZHJ562	R514	1
PA UNIT/460	CHIP RESISTOR	MCR10EZHJ473	R515	1
PA UNIT/460	CHIP RESISTOR	MCR10EZHJ474	R516	1
PA UNIT/460	CHIP RESISTOR	MCR10EZHJ104	R517	1
PA UNIT/460	CHIP RESISTOR	MCR10EZHJ682	R518	1
PA UNIT/460	CHIP RESISTOR	MCR10EZHJ103	R519	1
PA UNIT/460	CHIP RESISTOR	MCR10EZHJ102	R520	1
PA UNIT/460	CHIP RESISTOR	MCR10EZHJ102	R521	1
PA UNIT/460	CHIP RESISTOR	MCR10EZHJ562	R522	1
PA UNIT/460	CHIP RESISTOR	MCR10EZHJ392	R523	1
PA UNIT/460	CHIP RESISTOR	MCR10EZHJ562	R524	1
PA UNIT/460	CHIP RESISTOR	MCR10EZHJ104	R525	1
PA UNIT/460	CHIP RESISTOR	MCR10EZHJ104	R526	1
PA UNIT/460	CHIP RESISTOR	MCR10EZHJ473	R529	1
PA UNIT/460	CHIP RESISTOR	MCR10EZHJ104	R530	1
PA UNIT/460	CHIP RESISTOR	MCR10EZHJ271	R531	1
PA UNIT/460	CHIP RESISTOR	MCR100EZHJ271	R532	1
PA UNIT/460	CHIP RESISTOR	MCR10EZHJ104	R533	1
PA UNIT/460	CHIP RESISTOR	MCR10EZHJ123	R534	1
PA UNIT/460	CHIP RESISTOR	MCR10EZHJ472	R535	1
PA UNIT/460	CHIP RESISTOR	MCR10EZHJ184	R536	1
PA UNIT/460	CHIP RESISTOR	MCR10EZHJ102	R537	1
PA UNIT/460	CHIP RESISTOR	MCR10EZHJ222	R538	1
PA UNIT/460	CHIP RESISTOR	MCR10EZHJ271	R539	1
PA UNIT/460	CHIP RESISTOR	MCR10EZHJ272	R540	1
PA UNIT/460	CHIP RESISTOR	MCR10EZHJ472	R541	1
PA UNIT/460	CHIP RESISTOR	MCR10EZHJ472	R542	1
PA UNIT/460	CHIP RESISTOR	MCR10EZHJ272	R543	1
PA UNIT/460	CHIP RESISTOR	MCR10EZHJ102	R545	1
PA UNIT/460	CHIP RESISTOR	MCR10EZHJ222	R546	1
PA UNIT/460	CHIP RESISTOR	MCR10EZHJ180	R547	1
PA UNIT/460	CHIP RESISTOR	MCR10EZHJ332	R548	1
PA UNIT/460	CHIP CHECKER	RCT	TP501	1
PA UNIT/460	CHIP CHECKER	RCT	TP502	1
PA UNIT/460	CONNECTOR	4A-S600		1
PA UNIT/460	SHIELD PLATE	4A10-3111		1
PA UNIT/460	P.C.B.	51PAU9X-2		1
PAP UNIT	COIL LEAD CHOKE	FBA04VA900KF	BL516	1
PAP UNIT	COIL LEAD CHOKE	FBA04VA900KF	BL517	1
PAP UNIT	MYCROHEDA	JM16LH-03CBT	CN503	1
PAP UNIT	CONNECTOR	4A-S600	CP501	1
PAP UNIT	CONNECTOR	4A-S601	DC510 -	1
PAP UNIT	CONNECTOR	4A-S602	DC510 +	1
PAP UNIT	THROUCH C.	1HB340YE102PDA05	FC502	1
PAP UNIT	P.C.B.	51PAP8X□1/4□		1
PA CH UNIT	BOSS	4A10-2999		8
PA CH UNIT	PA COVER	3A10-0574		1
PA CH UNIT	PA FRAME	2A10-0211		1
PA CH UNIT	SCREW SEMS	SE-3 X 5		7
PA CH UNIT	PA SEAL-510	3A10-0596		1
PA CH UNIT	SCREW SEMS	SE-3 X 8		8
KEY UNIT	CHIP CONNECTOR	00-6200-510-130-000	CN405	1
KEY UNIT	SWITCH	SKHMPW		20
KEY UNIT	P.C.B.	51KEY87-1□1/4□		1
KEY UNIT	SPACER	4A10-2996		4
KEY UNIT	SCREW SEMS	SE-3 X 10		4
VR UNIT	P.C.B.	51VRS87-2□1/4□		1
VR UNIT	CHIP CONNECTOR	00-6200-508-130-000	CN407	1
VR UNIT	DIODE □□□	SLA-370MT-3F	D412	1
VR UNIT	SWITCH	SPPH23056A	SW401	1
VR UNIT	ROTARY SWITCH	RY-6459	VR401	1
VR UNIT	ROTARY SWITCH	RY-6460	VR402	1
VR UNIT	BUTTON	4A10-2988		1
VR UNIT	SCREW SEMS	SE-3 X 10		2

CONT MAIN UNIT	CHIP IC	TA75S558F-TE85R	IC401	1
CONT MAIN UNIT	CHIP IC	TC74HC373AF(TP1)	IC402	1
CONT MAIN UNIT	CHIP IC	TA78M05F-TE16L	IC403	1
CONT MAIN UNIT	IC	TA8201AK	IC404	1
CONT MAIN UNIT	IC	PQ12RH11	IC405	1
CONT MAIN UNIT	CHIP IC	NJU7662M-T1	IC406	1
CONT MAIN UNIT	CHIP IC	BU4S01F-TR	IC407	1
CONT MAIN UNIT	CHIP CAPACITOR	GRM40B102K50PT	C401	1
CONT MAIN UNIT	CHIP CAPACITOR	GRM42-6B105K16NPT	C402	1
CONT MAIN UNIT	CHIP ELECTROLYT	MVK50VC1M D55	C403	1
CONT MAIN UNIT	CHIP CAPACITOR	GRM40CH101J50PT	C404	1
CONT MAIN UNIT	CHIP ELECTROLYT	MVK16VC10M D55	C405	1
CONT MAIN UNIT	CHIP CAPACITOR	GRM42-6B104K50PT	C406	1
CONT MAIN UNIT	CHIP CAPACITOR	GRM40CH271J50PT	C407	1
CONT MAIN UNIT	CHIP CAPACITOR	GRM40CH271J50PT	C408	1
CONT MAIN UNIT	CHIP ELECTROLYT	MVK16VC10M D55	C409	1
CONT MAIN UNIT	CHIP CAPACITOR	GRM40B102K50PT	C410	1
CONT MAIN UNIT	CHIP CAPACITOR	GRM42-6B104K50PT	C411	1
CONT MAIN UNIT	CHIP ELECTROLYT	MVK16VC10M D55	C412	1
CONT MAIN UNIT	CHIP ELECTROLYT	MVK16VC10M D55	C413	1
CONT MAIN UNIT	CHIP ELECTROLYT	MVK16VC10M D55	C414	1
CONT MAIN UNIT	CHIP TANTALUM	ECST1CY105R	C417	1
CONT MAIN UNIT	C.ELECTROLYT	KMG35VB-470M	C418	1
CONT MAIN UNIT	C.ELECTROLYT	KMG35VB-470M	C419	1
CONT MAIN UNIT	C.ELECTROLYT	KMG16VB-1000M	C420	1
CONT MAIN UNIT	CHIP CAPACITOR	GRM40B102K50PT	C421	1
CONT MAIN UNIT	CHIP CAPACITOR	GRM42-6B105K16NPT	C422	1
CONT MAIN UNIT	CHIP ELECTROLYT	MVK16VC47M F55	C424	1
CONT MAIN UNIT	CHIP ELECTROLYT	MVK35VC4R7M D55	C425	1
CONT MAIN UNIT	CHIP TANTALUM	ECST1AY106R	C427	1
CONT MAIN UNIT	C.ELECTROLYT	KMG16VB-220	C428	1
CONT MAIN UNIT	CHIP CAPACITOR	GRM40B104K25PT	C429	1
CONT MAIN UNIT	CHIP CAPACITOR	GRM40B104K25PT	C430	1
CONT MAIN UNIT	CHIP CAPACITOR	GRM40B104K25PT	C431	1
CONT MAIN UNIT	MIC SOCKET	290A-88-30-119	CN401	1
CONT MAIN UNIT	CHIP CONNECTOR	00-6200-520-330-000	CN402	1
CONT MAIN UNIT	CHIP CONNECTOR	00-6200-516-230-000	CN403	1
CONT MAIN UNIT	CHIP CONNECTOR	00-6200-510-130-000	CN404	1
CONT MAIN UNIT	CHIP CONNECTOR	00-6200-508-130-000	CN406	1
CONT MAIN UNIT	CONNECTOR □□□	B 3P-VH	CN408	1
CONT MAIN UNIT	CONNECTOR	SB20-02WS	CN409	1
CONT MAIN UNIT	CONNECTOR	FF20-TAMEP1	CP401	1
CONT MAIN UNIT	LED	MU16-4101	D401	1
CONT MAIN UNIT	LED	MU16-3101	D402	1
CONT MAIN UNIT	LED	MU16-2101	D403	1
CONT MAIN UNIT	LED	MU16-5101	D404	1
CONT MAIN UNIT	CHIP DIODE	1SS355	D405	1
CONT MAIN UNIT	CHIP DIODE	1SS355	D406	1
CONT MAIN UNIT	CHIP DIODE	1SS355	D407	1
CONT MAIN UNIT	CHIP DIODE	1SS355	D408	1
CONT MAIN UNIT	CHIP DIODE	1SS355	D409	1
CONT MAIN UNIT	CHIP DIODE	DA204U-T106	D411	1
CONT MAIN UNIT	CHIP DIODE	DA204U-T106	D412	1
CONT MAIN UNIT	CHIP DIODE	1SS355	D414	1
CONT MAIN UNIT	FLAT CABLE	4A-S429	FLC402	1
CONT MAIN UNIT	FLAT CABLE	4A-S471	FLC403	1
CONT MAIN UNIT	FLAT CABLE	4A-S585	FLC405	1
CONT MAIN UNIT	FLAT CABLE	4A-S584	FLC407	1
CONT MAIN UNIT	VR □□□	GF06P 10K	FVR401	1
CONT MAIN UNIT	VR □□□	GF06P 100K	FVR402	1
CONT MAIN UNIT	CHIP VARICAP	EVM-7JSX30B14	FVR403	1
CONT MAIN UNIT	HEADPHONE JACK	S-G8022#01	J401	1
CONT MAIN UNIT	LCD	TM12832BBC	LCD401	1

CONT MAIN UNIT	CHIP TRANSISTOR	DTC114EKA-T146	Q401	1
CONT MAIN UNIT	CHIP TRANSISTOR	FMG9A-T148	Q402	1
CONT MAIN UNIT	CHIP TRANSISTOR	FMG9A-T148	Q403	1
CONT MAIN UNIT	CHIP TRANSISTOR	2SD1766-T100	Q404	1
CONT MAIN UNIT	CHIP TRANSISTOR	2SD2351-T106	Q405	1
CONT MAIN UNIT	CHIP TRANSISTOR	2SJ503	Q406	1
CONT MAIN UNIT	CHIP TRANSISTOR	UMC2-TR	Q407	1
CONT MAIN UNIT	CHIP TRANSISTOR	2SA1434-TB	Q408	1
CONT MAIN UNIT	CHIP TRANSISTOR	2SA1434-TB	Q409	1
CONT MAIN UNIT	CHIP TRANSISTOR	2SA1434-TB	Q410	1
CONT MAIN UNIT	CHIP RESISTOR	MCR10EZHJ000	R401	1
CONT MAIN UNIT	CHIP RESISTOR	MCR10EZHJ153	R405	1
CONT MAIN UNIT	CHIP RESISTOR	MCR10EZHJ102	R406	1
CONT MAIN UNIT	CHIP RESISTOR	MCR10EZHJ103	R407	1
CONT MAIN UNIT	CHIP RESISTOR	MCR10EZHJ273	R408	1
CONT MAIN UNIT	CHIP RESISTOR	MCR10EZHJ104	R409	1
CONT MAIN UNIT	CHIP RESISTOR	MCR10EZHJ104	R410	1
CONT MAIN UNIT	CHIP RESISTOR	MCR10EZHJ473	R411	1
CONT MAIN UNIT	CHIP RESISTOR	MCR10EZHJ222	R412	1
CONT MAIN UNIT	CHIP RESISTOR	MCR10EZHJ222	R414	1
CONT MAIN UNIT	CHIP RESISTOR	MCR10EZHJ560	R415	1
CONT MAIN UNIT	CHIP RESISTOR	MCR10EZHJ560	R416	1
CONT MAIN UNIT	CHIP RESISTOR	MCR10EZHJ221	R417	1
CONT MAIN UNIT	CHIP RESISTOR	MCR10EZHJ330	R418	1
CONT MAIN UNIT	CHIP RESISTOR	MCR10EZHJ473	R419	1
CONT MAIN UNIT	CHIP RESISTOR	MCR10EZHJ183	R420	1
CONT MAIN UNIT	CHIP RESISTOR	MCR10EZHJ822	R421	1
CONT MAIN UNIT	CHIP RESISTOR	MCR10EZHJ470	R422	1
CONT MAIN UNIT	CHIP RESISTOR	MCR10EZHJ470	R423	1
CONT MAIN UNIT	CHIP RESISTOR	MCR10EZHJ223	R424	1
CONT MAIN UNIT	CHIP RESISTOR	MCR10EZHJ472	R425	1
CONT MAIN UNIT	CHIP RESISTOR	MCR10EZHJ472	R426	1
CONT MAIN UNIT	CHIP RESISTOR	MCR10EZHJ181	R427	1
CONT MAIN UNIT	CHIP RESISTOR	MCR10EZHJ470	R428	1
CONT MAIN UNIT	CHIP RESISTOR	MCR10EZHJ470	R429	1
CONT MAIN UNIT	CHIP RESISTOR	MCR10EZHJ472	R430	1
CONT MAIN UNIT	CHIP RESISTOR	MCR10EZHJ472	R431	1
CONT MAIN UNIT	CHIP RESISTOR	MCR10EZHJ472	R432	1
CONT MAIN UNIT	CHIP RESISTOR	MCR10EZHJ472	R433	1
CONT MAIN UNIT	CHIP RESISTOR	MCR10EZHJ472	R434	1
CONT MAIN UNIT	CHIP RESISTOR	MCR10EZHJ472	R435	1
CONT MAIN UNIT	CHIP RESISTOR	MCR10EZHJ472	R436	1
CONT MAIN UNIT	CHIP RESISTOR	MCR10EZHJ472	R437	1
CONT MAIN UNIT	CHIP RESISTOR	MCR10EZHJ472	R438	1
CONT MAIN UNIT	CHIP RESISTOR	MCR10EZHJ103	R439	1
CONT MAIN UNIT	CHIP RESISTOR	MCR10EZHJ471	R440	1
CONT MAIN UNIT	CHIP RESISTOR	MCR10EZHJ472	R441	1
CONT MAIN UNIT	CHIP RESISTOR	MCR10EZHJ103	R442	1
CONT MAIN UNIT	CHIP RESISTOR	MCR18EZHJ4R7	R444	1
CONT MAIN UNIT	CHIP RESISTOR	MCR10EZHJ222	R445	1
CONT MAIN UNIT	CHIP RESISTOR	MCR10EZHJ563	R446	1
CONT MAIN UNIT	CHIP RESISTOR	MCR18EZHJ100	R447	1
CONT MAIN UNIT	CHIP RESISTOR	MCR10EZHJ333	R448	1
CONT MAIN UNIT	CHIP RESISTOR	MCR10EZHJ103	R449	1
CONT MAIN UNIT	CHIP RESISTOR	MCR10EZHJ332	R450	1
CONT MAIN UNIT	CHIP RESISTOR	MCR10EZHJ000	R451	1
CONT MAIN UNIT	CHIP RESISTOR	MCR10EZHJ822	R452	1
CONT MAIN UNIT	CHIP RESISTOR	MCR10EZHJ152	R453	1
CONT MAIN UNIT	CHIP RESISTOR	MCR10EZHJ224	R454	1
CONT MAIN UNIT	CHIP RESISTOR	MCR10EZHJ103	R455	1
CONT MAIN UNIT	CHIP RESISTOR	MCR10EZHJ104	R456	1
CONT MAIN UNIT	CHIP RESISTOR	MCR10EZHJ104	R457	1
CONT MAIN UNIT	CHIP RESISTOR	MCR10EZHJ103	R458	1

CONT MAIN UNIT	CHIP THERMISTER	TN10-4C103KT	TH401	1
CONT MAIN UNIT	COLLAR	4A10-3045		8
CONT MAIN UNIT	CORE	BP53RD030310120M	CN402-CN	1
CONT MAIN UNIT	P.C.B.	51FR087-3□1/2□		1
CONT MAIN UNIT	SCREW SEMS	SE-3 X 10		6
CONT MAIN UNIT	SPACER	4A10-3004A		3
CONT MAIN UNIT	PLATE	4A10-3079		1
CONT UNIT	FRONT PANEL	2A10-0213		1
CONT UNIT	BUTTON	4A10-2985		1
CONT UNIT	WINDOW	4A10-2987		1
CONT UNIT	KNOB	4A10-2989		2
CONT UNIT	SP GRILL	4A10-3001		1
CONT UNIT	SP SPACER	4A10-3026		1
CONT UNIT	TAPE FOR WINDOW	4A10-3047		1
CONT UNIT	CONNECTOR CABLE	4A-S499		1
CONT UNIT	SPEAKER	KS-110		1
CONT UNIT	SCREW PAN TP	PN-3 X 8 TP		4
IF UNIT/NORMAL	CHIP IC	TK10487M-TR	IC106	1
IF UNIT/NORMAL	CHIP CAPACITOR	GRM40CK010C50PT	C158	1
IF UNIT/NORMAL	CHIP CAPACITOR	GRM40CK010C50PT	C159	1
IF UNIT/NORMAL	CHIP CAPACITOR	GRM40CH040C50PT	C160	1
IF UNIT/NORMAL	CHIP CAPACITOR	GRM40CH120J50PT	C161	1
IF UNIT/NORMAL	CHIP CAPACITOR	GRM40CH220J50PT	C162	1
IF UNIT/NORMAL	CHIP CAPACITOR	GRM40B222K50PT	C163	1
IF UNIT/NORMAL	CHIP CAPACITOR	GRM40B102K50PT	C164	1
IF UNIT/NORMAL	CHIP CAPACITOR	GRM40B102K50PT	C165	1
IF UNIT/NORMAL	CHIP CAPACITOR	GRM40B153K50PT	C167	1
IF UNIT/NORMAL	CHIP CAPACITOR	GRM40B102K50PT	C168	1
IF UNIT/NORMAL	CHIP CAPACITOR	GRM40CH220J50PT	C169	1
IF UNIT/NORMAL	CHIP CAPACITOR	GRM40B222K50PT	C170	1
IF UNIT/NORMAL	CHIP CAPACITOR	GRM40CH470J50PT	C171	1
IF UNIT/NORMAL	CHIP CAPACITOR	GRM40B471K50PT	C172	1
IF UNIT/NORMAL	CHIP CAPACITOR	GRM40CH331J50PT	C173	1
IF UNIT/NORMAL	CHIP CAPACITOR	GRM40B223K25PT	C174	1
IF UNIT/NORMAL	CHIP CAPACITOR	GRM40B222K50PT	C175	1
IF UNIT/NORMAL	CHIP TANTALUM	ECST1CY684R	C176	1
IF UNIT/NORMAL	CHIP TANTALUM	ECST1VY334R	C177	1
IF UNIT/NORMAL	CHIP CAPACITOR	GRM42-6B105K16NPT	C178	1
IF UNIT/NORMAL	CHIP CAPACITOR	GRM40B473K25PT	C179	1
IF UNIT/NORMAL	CHIP CAPACITOR	GRM40B473K25PT	C180	1
IF UNIT/NORMAL	CHIP CAPACITOR	GRM40B473K25PT	C181	1
IF UNIT/NORMAL	CHIP CAPACITOR	GRM40B473K25PT	C182	1
IF UNIT/NORMAL	CHIP CAPACITOR	GRM40CH101J50PT	C183	1
IF UNIT/NORMAL	CHIP CAPACITOR	GRM42-6B105K16NPT	C184	1
IF UNIT/NORMAL	CHIP CAPACITOR	GRM40B153K50PT	C185	1
IF UNIT/NORMAL	CHIP CAPACITOR	GRM40B153K50PT	C186	1
IF UNIT/NORMAL	CHIP CAPACITOR	GRM40CH151J50PT	C190	1
IF UNIT/NORMAL	DISCRIMINATOR	CDBM455C7	CD101	1
IF UNIT/NORMAL	CERAMIC FILTER	CFWM455G	CF101	1
IF UNIT/NORMAL	CERAMIC FILTER	CFWM455E	CF102	1
IF UNIT/NORMAL	CONNECTOR	LPC-2T7M	CP103	1
IF UNIT/NORMAL	CONNECTOR	LPC-6T7M	CP104	1
IF UNIT/NORMAL	CHIP DIODE	1SS356-TW11	D115	1
IF UNIT/NORMAL	CHIP DIODE	1SS356-TW11	D116	1
IF UNIT/NORMAL	CHIP DIODE	1SS355	D117	1
IF UNIT/NORMAL	CHIP DIODE	RB501V-40TE17	D123	1
IF UNIT/NORMAL	CHIP VARICAP	EVM-7JSX30B24	FVR101	1
IF UNIT/NORMAL	CHIP INDUCTOR	NL322522T-R68J	L115	1
IF UNIT/NORMAL	CHIP INDUCTOR	ELJ-NCR47KF	L117	1
IF UNIT/NORMAL	CHIP TRANSISTOR	2SC4250(TE85R)	Q113	1
IF UNIT/NORMAL	CHIP TRANSISTOR	DTC314TK-T146	Q114	1
IF UNIT/NORMAL	CHIP FET	2SK209-Y(TE85R)	Q115	1
IF UNIT/NORMAL	CHIP FET	2SK209-Y(TE85R)	Q116	1

IF UNIT/NORMAL	CHIP TRANSISTOR	2SK3018-T106	Q127	1
IF UNIT/NORMAL	CHIP RESISTOR	MCR10EZHJ104	R160	1
IF UNIT/NORMAL	CHIP CAPACITOR	GRM40CK1R5C50PT	R161	1
IF UNIT/NORMAL	CHIP RESISTOR	MCR10EZHJ000	R162	1
IF UNIT/NORMAL	CHIP RESISTOR	MCR10EZHJ471	R163	1
IF UNIT/NORMAL	CHIP RESISTOR	MCR10EZHJ561	R164	1
IF UNIT/NORMAL	CHIP RESISTOR	MCR10EZHJ331	R165	1
IF UNIT/NORMAL	CHIP RESISTOR	MCR10EZHJ122	R166	1
IF UNIT/NORMAL	CHIP RESISTOR	MCR10EZHJ103	R167	1
IF UNIT/NORMAL	CHIP RESISTOR	MCR10EZHJ474	R168	1
IF UNIT/NORMAL	CHIP RESISTOR	MCR10EZHJ000	R169	1
IF UNIT/NORMAL	CHIP RESISTOR	MCR10EZHJ392	R170	1
IF UNIT/NORMAL	CHIP RESISTOR	MCR10EZHJ821	R171	1
IF UNIT/NORMAL	CHIP RESISTOR	MCR10EZHJ103	R172	1
IF UNIT/NORMAL	CHIP RESISTOR	MCR10EZHJ104	R173	1
IF UNIT/NORMAL	CHIP RESISTOR	MCR10EZHJ223	R174	1
IF UNIT/NORMAL	CHIP RESISTOR	MCR10EZHJ102	R175	1
IF UNIT/NORMAL	CHIP RESISTOR	MCR10EZHJ392	R176	1
IF UNIT/NORMAL	CHIP RESISTOR	MCR10EZHJ272	R177	1
IF UNIT/NORMAL	CHIP RESISTOR	MCR10EZHJ154	R178	1
IF UNIT/NORMAL	CHIP RESISTOR	MCR10EZHJ154	R179	1
IF UNIT/NORMAL	CHIP RESISTOR	MCR10EZHJ154	R180	1
IF UNIT/NORMAL	CHIP RESISTOR	MCR10EZHJ103	R181	1
IF UNIT/NORMAL	CHIP RESISTOR	MCR10EZHJ753	R182	1
IF UNIT/NORMAL	CRYSTAL FILTER	48.045MHZ	X101	1
IF UNIT/NORMAL	CRYSTAL FILTER	48S15B	X102A	1
IF UNIT/NORMAL	CRYSTAL FILTER	48S15B	X102B	1
IF UNIT/NORMAL	CF COVER	4A10-1624		2
IF UNIT/NORMAL	P.C.B.	51IF86-2□1/4□		1
IF UNIT/NORMAL	SCREW SEMS	SE-3 X 6		2
LOG UNIT	CHIP COIL	FBMH3216HM501NT	BL1	1
LOG UNIT	CHIP COIL	BLM21B421SPT	BL2	1
LOG UNIT	CHIP COIL	BLM21B421SPT	BL3	1
LOG UNIT	CHIP COIL	BLM21B421SPT	BL4	1
LOG UNIT	CHIP COIL	BLM21B421SPT	BL5	1
LOG UNIT	CHIP COIL	BLM21B421SPT	BL6	1
LOG UNIT	CHIP COIL	BLM21B421SPT	BL7	1
LOG UNIT	CHIP ELECTROLYT	MVK35VC4R7M D55	C1	1
LOG UNIT	CHIP TANTALUM	ECST1CY105R	C2	1
LOG UNIT	CHIP TANTALUM	ECST1CY105R	C3	1
LOG UNIT	CHIP ELECTROLYT	MVK16VC47M F55	C4	1
LOG UNIT	CHIP CAPACITOR	GRM40B104K25PT	C5	1
LOG UNIT	CHIP CAPACITOR	GRM40B104K25PT	C6	1
LOG UNIT	CHIP CAPACITOR	GRM40B222K50PT	C7	1
LOG UNIT	CHIP CAPACITOR	GRM40CH331J50PT	C8	1
LOG UNIT	DISK CAPACITOR	EECS5R5H474	C9	1
LOG UNIT	CHIP TANTALUM	ECST1VY224R	C10	1
LOG UNIT	CHIP CAPACITOR	GRM40B103K50PT	C11	1
LOG UNIT	CHIP CAPACITOR	GRM42-6B225K16NPT	C12	1
LOG UNIT	CHIP CAPACITOR	GRM40CH221J50PT	C13	1
LOG UNIT	CHIP CAPACITOR	GRM40CH470J50PT	C14	1
LOG UNIT	CHIP CAPACITOR	GRM40B103K50PT	C15	1
LOG UNIT	CHIP TANTALUM	ECST1CY105R	C16	1
LOG UNIT	CHIP TANTALUM	ECST1CY105R	C17	1
LOG UNIT	CHIP CAPACITOR	GRM40B104K25PT	C19	1
LOG UNIT	CHIP CAPACITOR	GRM40B473K25PT	C20	1
LOG UNIT	CHIP CAPACITOR	GRM40B104K25PT	C21	1
LOG UNIT	CHIP CAPACITOR	GRM40CH470J50PT	C22	1
LOG UNIT	CHIP CAPACITOR	GRM40B104K25PT	C23	1
LOG UNIT	CHIP CAPACITOR	GRM42-6B225K16NPT	C24	1
LOG UNIT	CHIP TANTALUM	ECST1CY105R	C25	1
LOG UNIT	CHIP CAPACITOR	GRM40B104K25PT	C27	1
LOG UNIT	CHIP CAPACITOR	GRM40B104K25PT	C28	1

LOG UNIT	CHIP CAPACITOR	GRM40CH820J50PT	C31	1
LOG UNIT	CHIP CAPACITOR	GRM40B104K25PT	C32	1
LOG UNIT	CHIP CAPACITOR	GRM40B104K25PT	C33	1
LOG UNIT	CHIP CAPACITOR	GRM40B103K50PT	C36	1
LOG UNIT	CHIP CAPACITOR	GRM40B473K25PT	C37	1
LOG UNIT	CHIP CAPACITOR	GRM40CH220J50PT	C38	1
LOG UNIT	CHIP CAPACITOR	GRM40CH220J50PT	C39	1
LOG UNIT	CHIP TANTALUM	ECST1EY474R	C40	1
LOG UNIT	CHIP CAPACITOR	GRM40B473K25PT	C42	1
LOG UNIT	CHIP CAPACITOR	GRM40CH330J50PT	C43	1
LOG UNIT	CHIP CAPACITOR	GRM40B473K25PT	C44	1
LOG UNIT	CHIP CAPACITOR	GRM40CH220J50PT	C45	1
LOG UNIT	CHIP CAPACITOR	GRM40CH220J50PT	C46	1
LOG UNIT	CHIP CAPACITOR	GRM40B103K50PT	C47	1
LOG UNIT	CHIP CAPACITOR	GRM40B103K50PT	C48	1
LOG UNIT	CHIP CAPACITOR	GRM40B103K50PT	C49	1
LOG UNIT	CHIP CAPACITOR	GRM40B333K25PT	C50	1
LOG UNIT	CHIP CAPACITOR	GRM40CH820J50PT	C51	1
LOG UNIT	CHIP CAPACITOR	GRM40B103K50PT	C52	1
LOG UNIT	CHIP TANTALUM	ECST1CY105R	C53	1
LOG UNIT	CHIP TANTALUM	ECST1CY105R	C54	1
LOG UNIT	CHIP CAPACITOR	GRM40CH470J50PT	C55	1
LOG UNIT	CHIP CAPACITOR	GRM42-6B225K16NPT	C58	1
LOG UNIT	CHIP TANTALUM	ECST1VY224R	C59	1
LOG UNIT	CHIP CAPACITOR	GRM40B104K25PT	C60	1
LOG UNIT	CHIP CAPACITOR	GRM40B104K25PT	C61	1
LOG UNIT	CHIP CAPACITOR	GRM40B473K25PT	C62	1
LOG UNIT	CHIP CAPACITOR	GRM40B473K25PT	C63	1
LOG UNIT	CHIP CAPACITOR	GRM40B104K25PT	C64	1
LOG UNIT	CHIP CAPACITOR	GRM40B682K50PT	C65	1
LOG UNIT	CHIP CAPACITOR	GRM40B473K25PT	C66	1
LOG UNIT	CHIP CAPACITOR	GRM40CH470J50PT	C67	1
LOG UNIT	CHIP CAPACITOR	GRM40B104K25PT	C68	1
LOG UNIT	CHIP CAPACITOR	GRM42-6B105K16NPT	C69	1
LOG UNIT	CHIP CAPACITOR	GRM40B104K25PT	C70	1
LOG UNIT	CHIP ELECTROLYT	MVK16VC47M F55	C71	1
LOG UNIT	CHIP TANTALUM	ECST1EY474R	C72	1
LOG UNIT	CHIP CAPACITOR	GRM40B104K25PT	C73	1
LOG UNIT	CHIP ELECTROLYT	MVK16VC10M D55	C74	1
LOG UNIT	CHIP CAPACITOR	GRM40B103K50PT	C75	1
LOG UNIT	CHIP CAPACITOR	GRM40B104K25PT	C76	1
LOG UNIT	CHIP ELECTROLYT	MVK16VC47M F55	C77	1
LOG UNIT	CHIP ELECTROLYT	MVK16VC47M F55	C78	1
LOG UNIT	CHIP CAPACITOR	GRM40B104K25PT	C79	1
LOG UNIT	CHIP CAPACITOR	GRM40B102K50PT	C80	1
LOG UNIT	CHIP CAPACITOR	GRM40B102K50PT	C81	1
LOG UNIT	CHIP CAPACITOR	GRM40B102K50PT	C82	1
LOG UNIT	CHIP CAPACITOR	GRM40B102K50PT	C83	1
LOG UNIT	CHIP CAPACITOR	GRM40B102K50PT	C84	1
LOG UNIT	CHIP CAPACITOR	GRM40B102K50PT	C85	1
LOG UNIT	CHIP CONNECTOR	00-6200-520-330-000	CN1	1
LOG UNIT	CHIP CONNECTOR	00-6200-516-230-000	CN2	1
LOG UNIT	CHIP CONNECTOR	00-6200-516-230-000	CN3	1
LOG UNIT	CHIP CONNECTOR	236A-08-90-134	CN4	1
LOG UNIT	CHIP CONNECTOR	236A-08-90-134	CN5	1
LOG UNIT	CONNECTOR	SB20-03WS	CN6	1
LOG UNIT	CHIP CONNECTOR	00-6200-516-230-000	CN7	1
LOG UNIT	CHIP CONNECTOR	00-6200-516-230-000	CN8	1
LOG UNIT	CHIP CONNECTOR	00-6200-520-330-000	CN9	1
LOG UNIT	CHIP DIODE	1SS355	D1	1
LOG UNIT	CHIP DIODE	1SS355	D2	1
LOG UNIT	CHIP DIODE	1SS355	D3	1
LOG UNIT	CHIP DIODE	1SS355	D4	1

LOG UNIT	CHIP DIODE	1SS355	D5	1
LOG UNIT	CHIP DIODE	RB501V-40TE-17	D7	1
LOG UNIT	CHIP DIODE	1SS355	D8	1
LOG UNIT	CHIP DIODE	DAP202U-T106	D9	1
LOG UNIT	CHIP DIODE	DAP202U-T106	D10	1
LOG UNIT	CHIP DIODE	RB501V-40TE-17	D11	1
LOG UNIT	CHIP DIODE	DAN202U-T106	D12	1
LOG UNIT	CHIP DIODE	1SS355	D13	1
LOG UNIT	CHIP DIODE	1SS355	D14	1
LOG UNIT	CHIP DIODE	1SS355	D15	1
LOG UNIT	CHIP TRIMMER	TZV02R200A110	FVC1	1
LOG UNIT	CHIP VARICAP	EVM-7JSX30B24	FVR1	1
LOG UNIT	CHIP VARICAP	EVM-7JSX30B25	FVR2	1
LOG UNIT	CHIP VARICAP	EVM-7JSX30B54	FVR3	1
LOG UNIT	CHIP IC	UPD78F0058GC	IC1	1
LOG UNIT	IC	AK2344	IC2	1
LOG UNIT	IC	AK2344	IC3	1
LOG UNIT	CHIP IC	AN78L05M	IC4	1
LOG UNIT	CHIP IC	AN78L05M	IC5	1
LOG UNIT	CHIP IC	NJM2405M-T1	IC6	1
LOG UNIT	EE ROM	HN58C65FP-25	IC7	1
LOG UNIT	CHIP IC	TC74HC373AF(TP1)	IC8	1
LOG UNIT	CHIP IC	RN5VL22AA-TL	IC9	1
LOG UNIT	CHIP IC	TA75S01F(TE85R)	IC10	1
LOG UNIT	CHIP IC	BU4S81-TR	IC11	1
LOG UNIT	CHIP IC	BU4S01-TR	IC12	1
LOG UNIT	CHIP IC	TS272CD	IC13	1
LOG UNIT	CHIP IC	TS272CD	IC14	1
LOG UNIT	CHIP IC	BU4S81-TR	IC15	1
LOG UNIT	CHIP IC	NJM2073M-T1	IC16	1
LOG UNIT	CHIP IC	BU4S66-TR	IC17	1
LOG UNIT	CHIP IC	TC7W74FU(TE12L)	IC18	1
LOG UNIT	JUMPER PLUG	DIC-149-3P	JP1	1
LOG UNIT	JUMPER SOCKET	DIC-128	JS	1
LOG UNIT	CHIP FET	2SK209-Y(TE85R)	Q1	1
LOG UNIT	CHIP FET	2SK209-Y(TE85R)	Q2	1
LOG UNIT	CHIP FET	2SK209-Y(TE85R)	Q3	1
LOG UNIT	CHIP FET	2SK209-Y(TE85R)	Q4	1
LOG UNIT	CHIP TRANSISTOR	RN6001(TE12R,C)	Q6	1
LOG UNIT	CHIP TRANSISTOR	DTC124EKA-T146	Q7	1
LOG UNIT	CHIP RESISTOR	MCR10EZHJ104	R00	1
LOG UNIT	CHIP RESISTOR	MCR10EZHJ823	R01	1
LOG UNIT	CHIP RESISTOR	MCR10EZHJ562	R02	1
LOG UNIT	CHIP RESISTOR	MCR10EZHJ225	R03	1
LOG UNIT	CHIP RESISTOR	MCR10EZHJ273	R04	1
LOG UNIT	CHIP RESISTOR	MCR10EZHJ473	R05	1
LOG UNIT	CHIP RESISTOR	MCR10EZHJ154	R1	1
LOG UNIT	CHIP RESISTOR	MCR10EZHJ113	R2	1
LOG UNIT	CHIP RESISTOR	MCR10EZHJ225	R3	1
LOG UNIT	CHIP RESISTOR	MCR10EZHJ184	R4	1
LOG UNIT	CHIP RESISTOR	MCR10EZHJ105	R5	1
LOG UNIT	CHIP RESISTOR	MCR10EZHJ273	R6	1
LOG UNIT	CHIP RESISTOR	MCR10EZHJ104	R7	1
LOG UNIT	CHIP RESISTOR	MCR10EZHJ273	R8	1
LOG UNIT	CHIP RESISTOR	MCR10EZHJ104	R9	1
LOG UNIT	CHIP RESISTOR	MCR10EZHJ473	R10	1
LOG UNIT	CHIP RESISTOR	MCR10EZHJ752	R11	1
LOG UNIT	CHIP RESISTOR	MCR10EZHJ682	R12	1
LOG UNIT	CHIP RESISTOR	MCR10EZHJ101	R13	1
LOG UNIT	CHIP RESISTOR	MCR10EZHJ103	R14	1
LOG UNIT	CHIP RESISTOR	MCR10EZHJ393	R15	1
LOG UNIT	CHIP RESISTOR	MCR10EZHJ153	R16	1
LOG UNIT	CHIP RESISTOR	MCR10EZHJ103	R17	1

LOG UNIT	CHIP RESISTOR	MCR10EZHJ473	R18	1
LOG UNIT	CHIP RESISTOR	MCR10EZHJ223	R19	1
LOG UNIT	CHIP RESISTOR	MCR10EZHJ154	R20	1
LOG UNIT	CHIP RESISTOR	MCR10EZHJ104	R21	1
LOG UNIT	CHIP RESISTOR	MCR10EZHJ472	R22	1
LOG UNIT	CHIP RESISTOR	MCR10EZHJ104	R23	1
LOG UNIT	CHIP RESISTOR	MCR10EZHJ154	R24	1
LOG UNIT	CHIP RESISTOR	MCR10EZHJ183	R25	1
LOG UNIT	CHIP RESISTOR	MCR10EZHJ473	R26	1
LOG UNIT	CHIP RESISTOR	MCR10EZHJ222	R27	1
LOG UNIT	CHIP RESISTOR	MCR10EZHJ823	R28	1
LOG UNIT	CHIP RESISTOR	MCR10EZHJ154	R29	1
LOG UNIT	CHIP RESISTOR	MCR10EZHJ154	R30	1
LOG UNIT	CHIP RESISTOR	MCR10EZHJ103	R32	1
LOG UNIT	CHIP RESISTOR	MCR10EZHJ473	R33	1
LOG UNIT	CHIP RESISTOR	MCR10EZHJ154	R34	1
LOG UNIT	CHIP RESISTOR	MCR10EZHJ223	R35	1
LOG UNIT	CHIP RESISTOR	MCR10EZHJ223	R36	1
LOG UNIT	CHIP RESISTOR	MCR10EZHJ104	R37	1
LOG UNIT	CHIP RESISTOR	MCR10EZHJ105	R38	1
LOG UNIT	CHIP RESISTOR	MCR10EZHJ472	R39	1
LOG UNIT	CHIP RESISTOR	MCR10EZHJ102	R40	1
LOG UNIT	CHIP RESISTOR	MCR10EZHJ472	R41	1
LOG UNIT	CHIP RESISTOR	MCR10EZHJ473	R42	1
LOG UNIT	CHIP RESISTOR	MCR10EZHJ563	R43	1
LOG UNIT	CHIP RESISTOR	MCR10EZHJ103	R44	1
LOG UNIT	CHIP RESISTOR	MCR10EZHJ000	R45	1
LOG UNIT	CHIP RESISTOR	MCR10EZHJ000	R46	1
LOG UNIT	CHIP RESISTOR	MCR10EZHJ223	R47	1
LOG UNIT	CHIP RESISTOR	MCR10EZHJ103	R49	1
LOG UNIT	CHIP RESISTOR	MCR10EZHJ105	R50	1
LOG UNIT	CHIP RESISTOR	MCR10EZHJ823	R52	1
LOG UNIT	CHIP RESISTOR	MCR10EZHJ333	R53	1
LOG UNIT	CHIP RESISTOR	MCR10EZHJ103	R54	1
LOG UNIT	CHIP RESISTOR	MCR10EZHJ154	R55	1
LOG UNIT	CHIP RESISTOR	MCR10EZHJ333	R56	1
LOG UNIT	CHIP RESISTOR	MCR10EZHJ683	R57	1
LOG UNIT	CHIP RESISTOR	MCR10EZHJ104	R58	1
LOG UNIT	CHIP RESISTOR	MCR10EZHJ104	R59	1
LOG UNIT	CHIP RESISTOR	MCR10EZHJ154	R60	1
LOG UNIT	CHIP RESISTOR	MCR10EZHJ103	R61	1
LOG UNIT	CHIP RESISTOR	MCR10EZHJ823	R62	1
LOG UNIT	CHIP RESISTOR	MCR10EZHJ103	R63	1
LOG UNIT	CHIP RESISTOR	MCR10EZHJ124	R64	1
LOG UNIT	CHIP RESISTOR	MCR10EZHJ104	R65	1
LOG UNIT	CHIP RESISTOR	MCR10EZHJ104	R66	1
LOG UNIT	CHIP RESISTOR	MCR10EZHJ473	R67	1
LOG UNIT	CHIP RESISTOR	MCR10EZHJ124	R68	1
LOG UNIT	CHIP RESISTOR	MCR10EZHJ223	R69	1
LOG UNIT	CHIP RESISTOR	MCR10EZHJ154	R70	1
LOG UNIT	CHIP RESISTOR	MCR10EZHJ104	R71	1
LOG UNIT	CHIP RESISTOR	MCR10EZHJ154	R72	1
LOG UNIT	CHIP RESISTOR	MCR10EZHJ184	R73	1
LOG UNIT	CHIP RESISTOR	MCR10EZHJ3R3	R74	1
LOG UNIT	CHIP RESISTOR	MCR10EZHJ474	R75	1
LOG UNIT	CHIP RESISTOR	MCR10EZHJ472	R76	1
LOG UNIT	CHIP RESISTOR	MCR50EZHJ4R7	R77	1
LOG UNIT	CHIP RESISTOR	MCR10EZHJ472	R78	1
LOG UNIT	CHIP RESISTOR	MCR10EZHJ104	R79	1
LOG UNIT	CHIP RESISTOR	MCR10EZHJ473	R80	1
LOG UNIT	CHIP RESISTOR	MCR10EZHJ103	R82	1
LOG UNIT	CHIP RESISTOR	MCR10EZHJ104	R83	1
LOG UNIT	CHIP RESISTOR	MCR10EZHJ473	R84	1

LOG UNIT	CHIP RESISTOR	MCR10EZHJ472	R85	1
LOG UNIT	CHIP RESISTOR	MCR10EZHJ103	R86	1
LOG UNIT	CHIP RESISTOR	MCR10EZHJ271	R87	1
LOG UNIT	CHIP RESISTOR	MCR10EZHJ271	R88	1
LOG UNIT	CHIP RESISTOR	MCR10EZHJ473	R89	1
LOG UNIT	CHIP RESISTOR	MCR10EZHJ154	R90	1
LOG UNIT	CHIP RESISTOR	MCR10EZHJ223	R91	1
LOG UNIT	CHIP RESISTOR	MCR10EZHJ273	R94	1
LOG UNIT	CHIP RESISTOR	MCR10EZHJ154	R95	1
LOG UNIT	CHIP RESISTOR	MCR10EZHJ472	R96	1
LOG UNIT	CHIP RESISTOR	MCR10EZHJ394	R97	1
LOG UNIT	CHIP RESISTOR	MCR10EZHJ102	R98	1
LOG UNIT	CHIP RESISTOR	MCR10EZHJ103	R99	1
LOG UNIT	CHIP R ARRAY	MNR14E0ABJ472	RA1	1
LOG UNIT	CHIP R ARRAY	MNR14E0ABJ472	RA2	1
LOG UNIT	CHIP R ARRAY	MNR14E0ABJ472	RA3	1
LOG UNIT	CHIP CHECKER	RCT	TP1	1
LOG UNIT	CRYSTAL	DS-MAT309(4.19MHZ)	X1	1
LOG UNIT	CRYSTAL	SMX-3F(3.6864MHZ)	X2	1
LOG UNIT	CRYSTAL	SMX-3F(3.6864MHZ)	X3	1
LOG UNIT	P.C.B.	51LOG87-4□1/2□		1
DC UNIT	DC PLUG	21-3B	CN701	1
DC UNIT	CONNECTOR	SB20-02WS	CN702	1
DC UNIT	CONNECTOR	SB20-02WS	CN703	1
DC UNIT	TERMINAL	42822-2	CP701	1
DC UNIT	TERMINAL	42117-2	CP702	1
DC UNIT	CONNECTOR	4A-S603	CP703	1
DC UNIT	DIODE □□□	20DL2C	D701	1
DC UNIT	CHIP DIODE	1SR154-400TE25	D702	1
DC UNIT	CHIP TRANSISTOR	2SD2153	Q701	1
DC UNIT	P.C.B.	51DC99□1/4□		1
DS UNIT	CHIP CONNECTOR	00-6200-520-330-000	CN601	1
DS UNIT	CHIP CONNECTOR	00-6200-516-230-000	CN602	1
DS UNIT	CONNECTOR	DELC-J25SAF-20L9	CN603	1
DS UNIT	CONNECTOR	DELC-J9SAF-20L9	CN604	1
DS UNIT	P.C.B.	51DSUB9X□1/4□		1
ASSY	FLAT CABLE	4A-S471	FL102(RX)	1
ASSY	FLAT CABLE	4A-S471	FL202(TX)	1
ASSY	FLAT CABLE	4A-S579	FL601	1
ASSY	FLAT CABLE	4A-S580	FL602	1
ASSY	BNC CONNECTOR	BNC-J/NJ(F)		1
ASSY	BNC CONNECTOR	BNC-PA-JJ		1
ASSY	BOTTOM COVER	3A10-0571		1
ASSY	CHASSIS-KG510	3A10-0572		1
ASSY	DC SOCKET	21-3A		1
ASSY	FUSE	FGBO 125V 20A		2
ASSY	FUSE HOLDER	SN-2054#01C		1
ASSY	HANDLE	3A10-0570		2
ASSY	HEAT SINK	2A10-0209		1
ASSY	NUT	NT-3		4
ASSY	PLATE	4A10-2995		1
ASSY	PROTECTOR(L)	3A10-0579		1
ASSY	PROTECTOR(R)	3A10-0578		1
ASSY	REAR PANEL	2A10-0212A		1
ASSY	RUBBER CUSHION	SJ-5009		4
ASSY	SCREW BIND(BLK)	BDB-3 X 5		8
ASSY	SCREW FLAT	OV-3 X 8		3
ASSY	SCREW OVAL(BLK)	OVB-4 X 8		2
ASSY	SCREW SEMS	SE-2.6 X 8		4
ASSY	SCREW SEMS	SE-3 X 10		4
ASSY	SCREW SEMS	SE-3 X 8		35
ASSY	SCREW SEMS(BLK)	SEB-4 X 10		19
ASSY	SCREW SEMS(BLK)	SEB-4 X 15		4

ASSY	SIDE(L)	2A10-0207	1
ASSY	SIDE(R)	2A10-0208	1
ASSY	SPRING	FOT-233-00	2
ASSY	WASHER	FW-3(L)	4

Modification Sheet

Modification Sheet No:	**MS01788-01**	Issue	**A**
Modification Description:	**KF510 Front Panel PCB (51FRO87-2) Modification (For Use With Key Radio Logic Boards)**		
Drawn By:	**Andy Walters**	Date:	22nd October 2001

Modification Instruction

Sheet 1 Of 1

For ALL KF510 VHF/UHF Base Stations (PMR & Trunked)With The Key Radio Logic Board

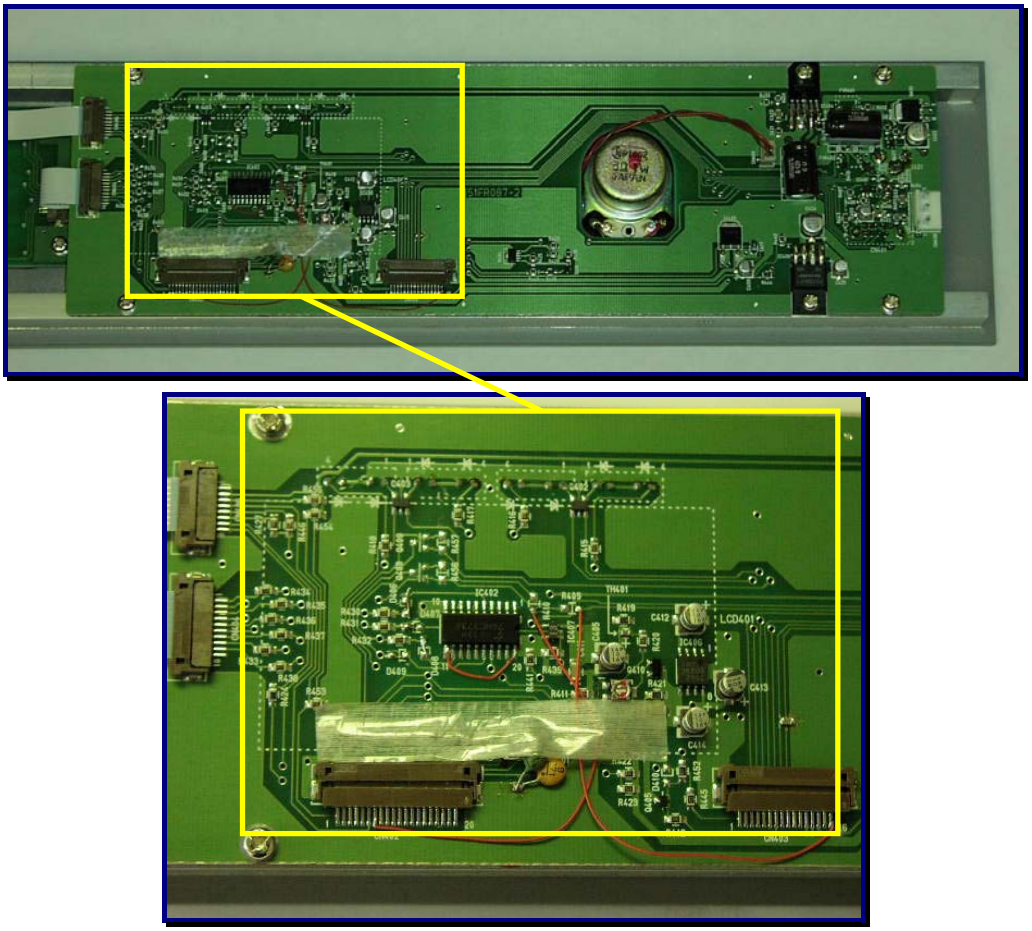

Figure 1 – KF510 Front Panel PCB (51FRO87-2) – Top Side
(Ribbon Cables Removed for Clarity)

Referring to Photographs above

1. **Remove:-** Resistors R456,R457,R409,R410; Transistors Q408,Q409; and Diodes D406,D407,D408,D409
2. **Fit:-** Resistor 0R 0805 style (MRP - 1002-0000) to D406,D407,D408 and D409
3. **Link:-** Pins CN403/16 to CN401/3 (R409); Pins CN402/7 to CN401/6 (R410) and Lift IC402 pin 11, connect IC402 pin 11 to IC402 pin 20 – Use Kynar Wiring 26AWG (MRP - 1582-0026)

Modification Sheet Approval:

Engineering Approval:		**Date:**	

Revision

Issue	Change Note No.	Date		Issue	Change Note No.	Date

Modification Sheet

Modification Sheet No:	**MS 01807-01**	Issue	**A**
Modification Description:	**KF510 – PA Unit Board Modification** (Reverse Power Reading)		
Drawn By:	**Andy Walters**	Date:	19th February 2002

Modification Instruction

This Modification is required for use with Key Logic Board Only
(Not required with Kyodo Logic Board)

Referring to attached Modified Circuit Diagram, Sheet 02
{PA Unit - 51PAU05 (2A-SA0007-4)}

1. Remove the following Components:

D507,
(1260-0014 - Diode 1SS355)

D508,
(1260-0014 - Diode 1SS355)

R515,
(1001-4730 - Resistor 0603 47K)

R517,
(1001-1040 - Resistor 0603 100K)

R519.
(1001-1030 - Resistor 0603 10K)

2. Fit the following Components in the positions indicated:

a) Across IC501A – Pin 1 & 2 (Across C550) ..... 1001-1030 ..... Resistor 10K 0603 Style

b) D508 ..... 1001-1030 ..... Resistor 10K 0603 Style
(Across IC501A – Pin 1 & IC501B – Pin 5)

c) Across IC501B – Pin 6 & 7 ..... 1001-1030 ..... Resistor 10K 0603 Style

Modification Sheet Approval:

Engineering Approval:		**Date:**	19th February 2002

Revision

Issue	Change Note No.	Date		Issue	Change Note No.	Date

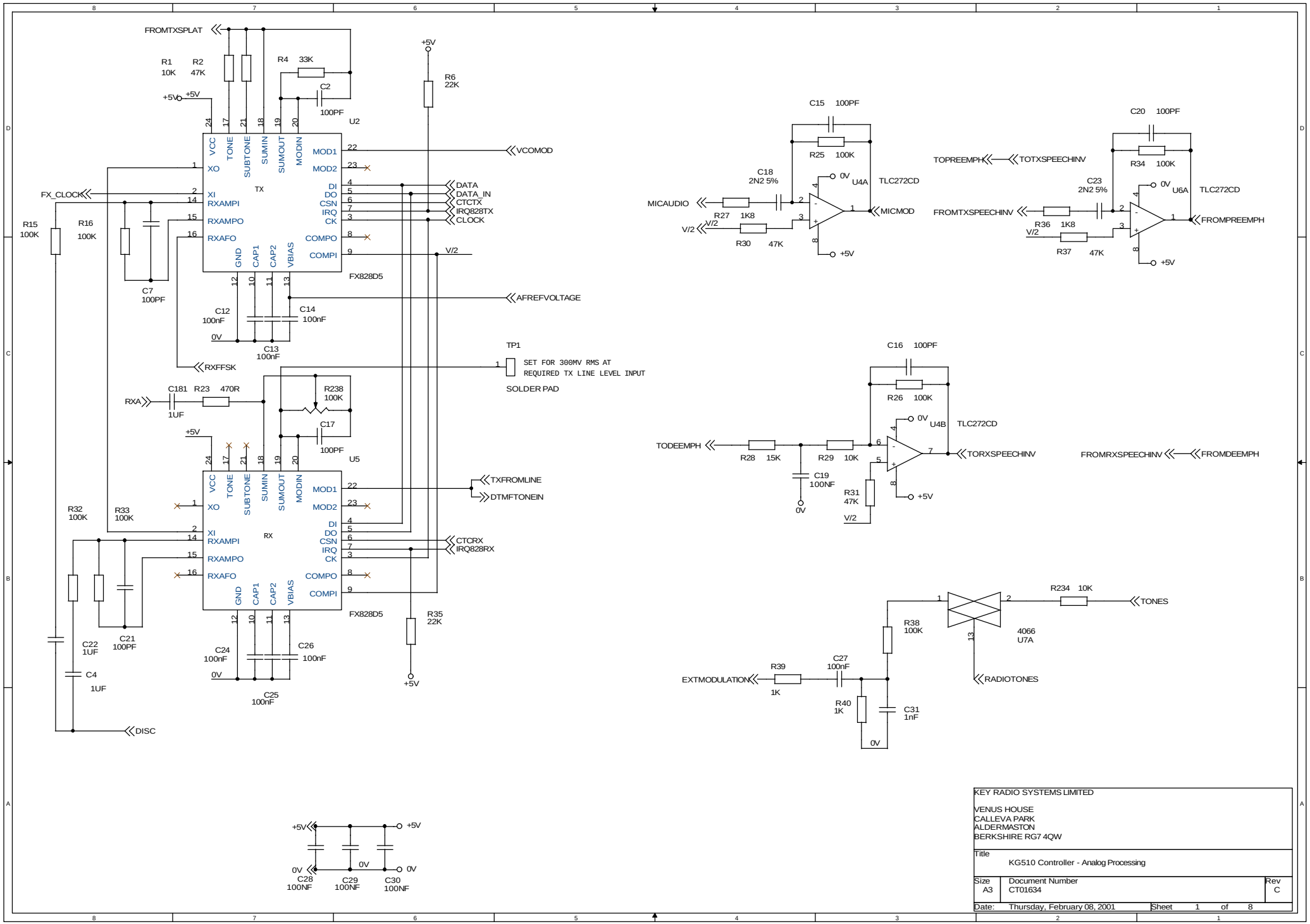

KEY RADIO SYSTEMS LIMITED

VENUS HOUSE
CALLEVA PARK
ALDERMASTON
BERKSHIRE RG7 4QW

Title: KG510 Controller - Analog Processing

Size	Document Number	Rev
A3	CT01634	C

Date: Thursday, February 08, 2001 Sheet 1 of 8

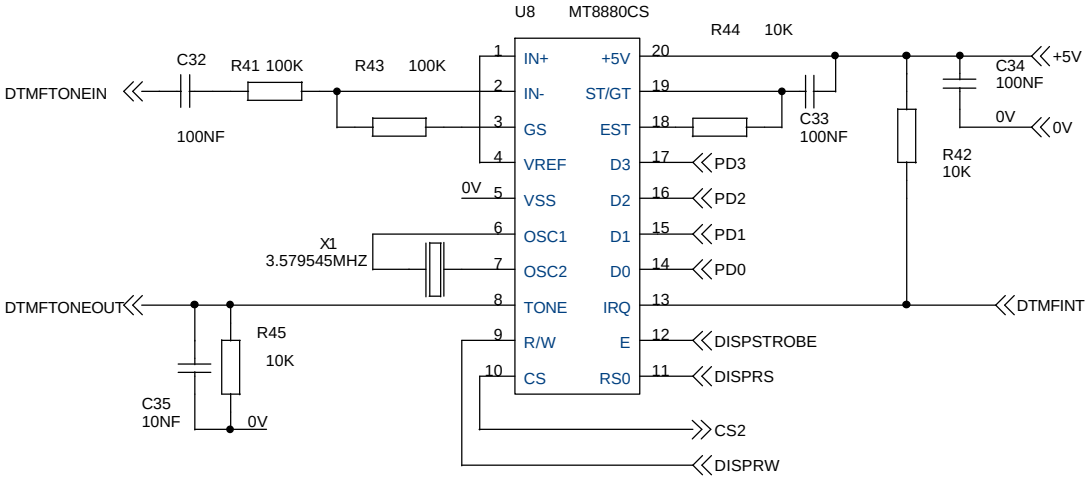

KEY RADIO SYSTEMS LIMITED

VENUS HOUSE
CALLEVA PARK
ALDERMASTON
BERKSHIRE RG7 4QW

Title
KG510 Controller - DTMF Tranceiver

Size	Document Number	Rev
A4	CT01634	C

Date: Tuesday, January 16, 2001 Sheet 2 of 8

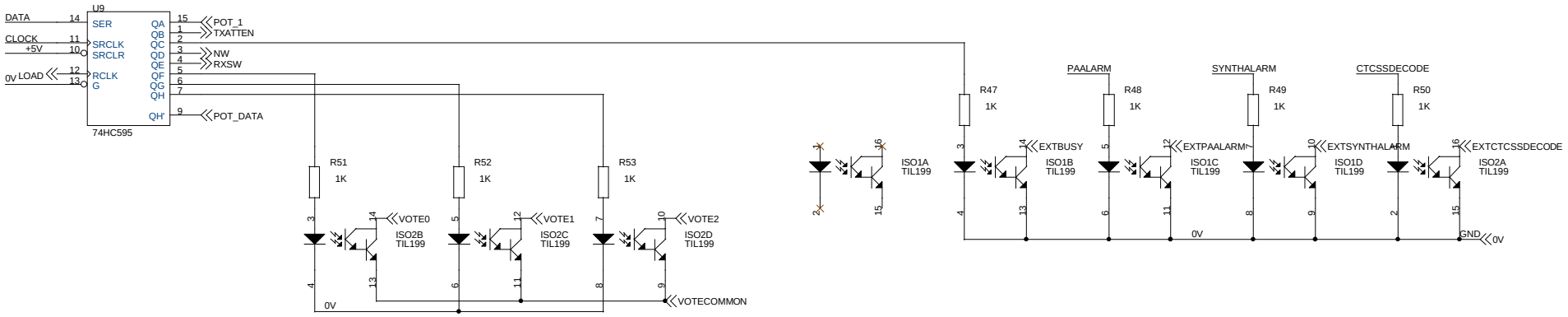

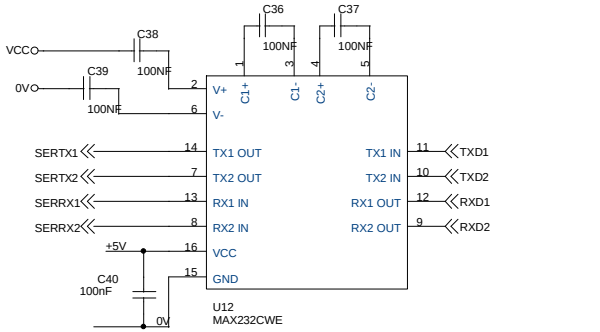

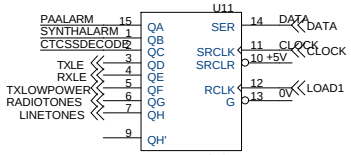

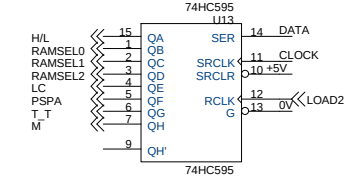

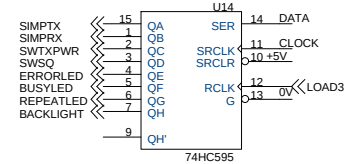

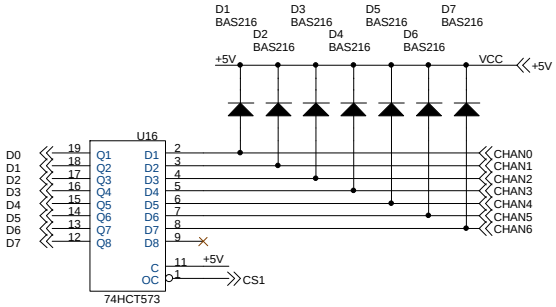

CHANNEL CONTROL

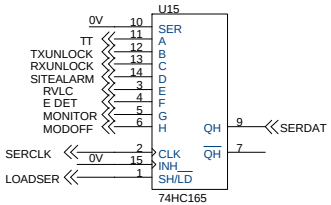

KEY RADIO SYSTEMS LIMITED

VENUS HOUSE
CALLEVA PARK
ALDERMASTON
BERKSHIRE RG7 4QW

Title: KG510 Controller - I/O

Size	Document Number	Rev
A3	CT01634	C

Date: Tuesday, January 16, 2001 Sheet 3 of 8

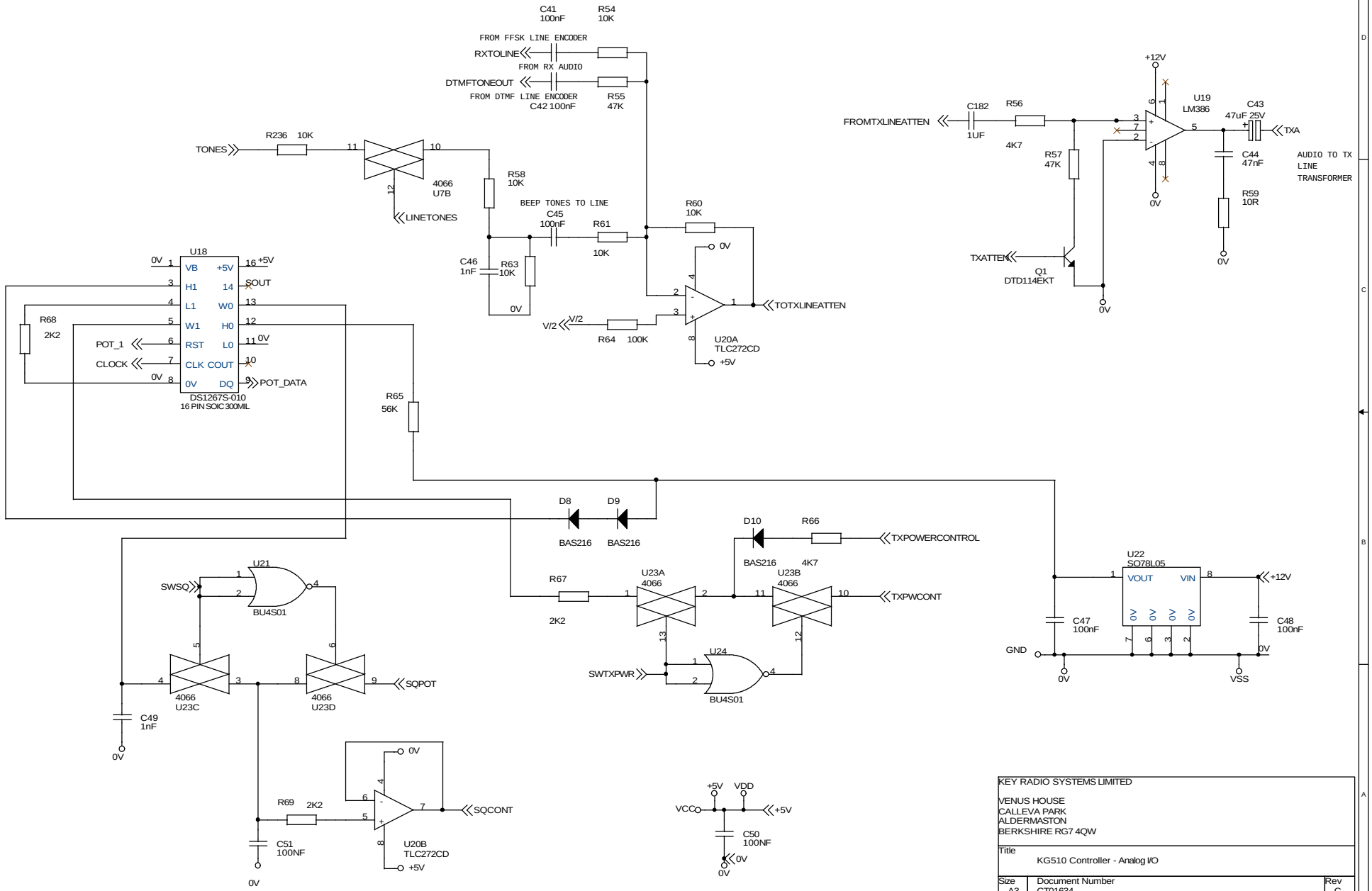

KEY RADIO SYSTEMS LIMITED

VENUS HOUSE
CALLEVA PARK
ALDERMASTON
BERKSHIRE RG7 4QW

Title: KG510 Controller - Analog I/O

Size	Document Number	Rev
A3	CT01634	C

Date: Tuesday, January 16, 2001 Sheet 4 of 8

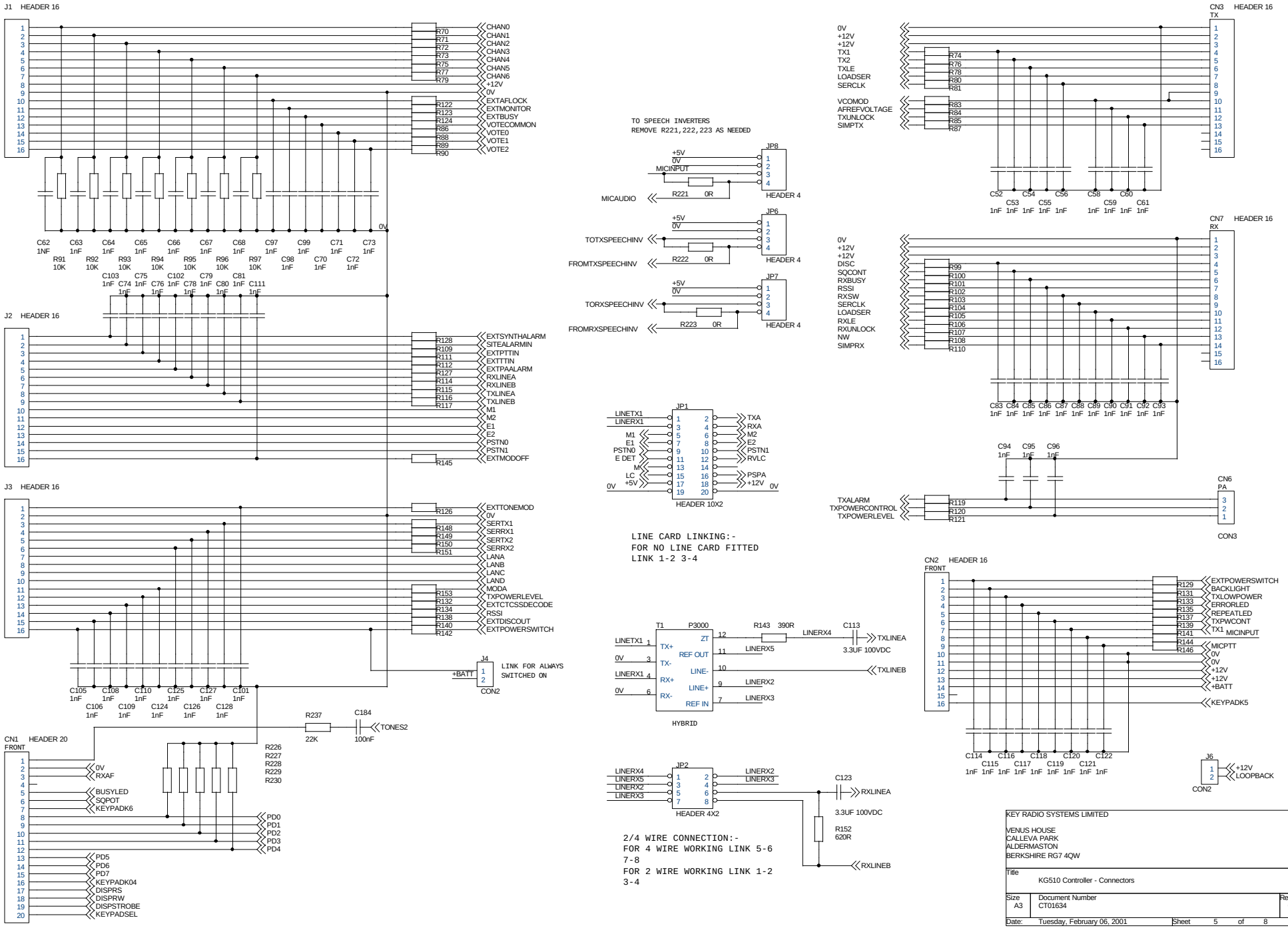
J1 HEADER 16
CHAN0
CHAN1
CHAN2
CHAN3
CHAN4
CHAN5
CHAN6
+12V
0V
EXTAFLOCK
EXTMONITOR
EXTBUSY
VOTECOMMON
VOTE0
VOTE1
VOTE2
J2 HEADER 16
EXTSYNTHALARM
SITEALARMIN
EXTPTTIN
EXTTTIN
EXTPAALARM
RXLINEA
RXLINEB
TXLINEA
TXLINEB
M1
M2
E1
E2
PSTN0
PSTN1
EXTMODOFF
J3 HEADER 16
EXTTONEMOD
0V
SERTX1
SERRX1
SERTX2
SERRX2
LANA
LANB
LANC
LAND
MODA
TXPOWERLEVEL
EXTCTCSSDECODE
RSSI
EXTDISCOUT
EXTPOWERSWITCH
J4
+BATT
LINK FOR ALWAYS SWITCHED ON
CON2
CN1 HEADER 20
FRONT
0V
RXAF
BUSYLED
SQPOT
KEYPADK6
PD0
PD1
PD2
PD3
PD4
PD5
PD6
PD7
KEYPADK04
DISPRS
DISPRW
DISPSTROBE
KEYPADSEL
R237 22K
C184 100nF
TONES2
TO SPEECH INVERTERS
REMOVE R221,222,223 AS NEEDED
JP8
+5V
0V
MICINPUT
MICAUDIO
R221 0R
HEADER 4
JP6
TOTXSPEECHINV
FROMTXSPEECHINV
R222 0R
JP7
TORXSPEECHINV
FROMRXSPEECHINV
R223 0R
JP1
LINETX1
LINERX1
M1
E1
PSTN0
E DET
M
LC
+5V
0V
TXA
RXA
M2
E2
PSTN1
RVLC
PSPA
+12V
HEADER 10X2
LINE CARD LINKING:-
FOR NO LINE CARD FITTED
LINK 1-2 3-4
T1 P3000
TX+
TX-
RX+
RX-
ZT
REF OUT
LINE-
LINE+
REF IN
R143 390R
C113 3.3UF 100VDC
LINERX4
LINERX5
LINERX2
LINERX3
TXLINEA
TXLINEB
HYBRID
JP2
HEADER 4X2
C123 3.3UF 100VDC
R152 620R
RXLINEA
RXLINEB
2/4 WIRE CONNECTION:-
FOR 4 WIRE WORKING LINK 5-6
7-8
FOR 2 WIRE WORKING LINK 1-2
3-4
CN3 HEADER 16
TX
0V
+12V
+12V
TX1
TX2
TXLE
LOADSER
SERCLK
VCOMOD
AFREFVOLTAGE
TXUNLOCK
SIMPTX
CN7 HEADER 16
RX
0V
+12V
+12V
DISC
SQCONT
RXBUSY
RSSI
RXSW
SERCLK
LOADSER
RXLE
RXUNLOCK
NW
SIMPRX
C94 1nF
C95 1nF
C96 1nF
CN6
PA
TXALARM
TXPOWERCONTROL
TXPOWERLEVEL
CON3
CN2 HEADER 16
FRONT
EXTPOWERSWITCH
BACKLIGHT
TXLOWPOWER
ERRORLED
REPEATLED
TXPWCONT
TX1
MICINPUT
MICPTT
0V
0V
+12V
+12V
+BATT
KEYPADK5
J6
+12V
LOOPBACK
CON2
KEY RADIO SYSTEMS LIMITED
VENUS HOUSE
CALLEVA PARK
ALDERMASTON
BERKSHIRE RG7 4QW
Title
KG510 Controller - Connectors
Size A3
Document Number CT01634
Rev C
Date: Tuesday, February 06, 2001
Sheet 5 of 8

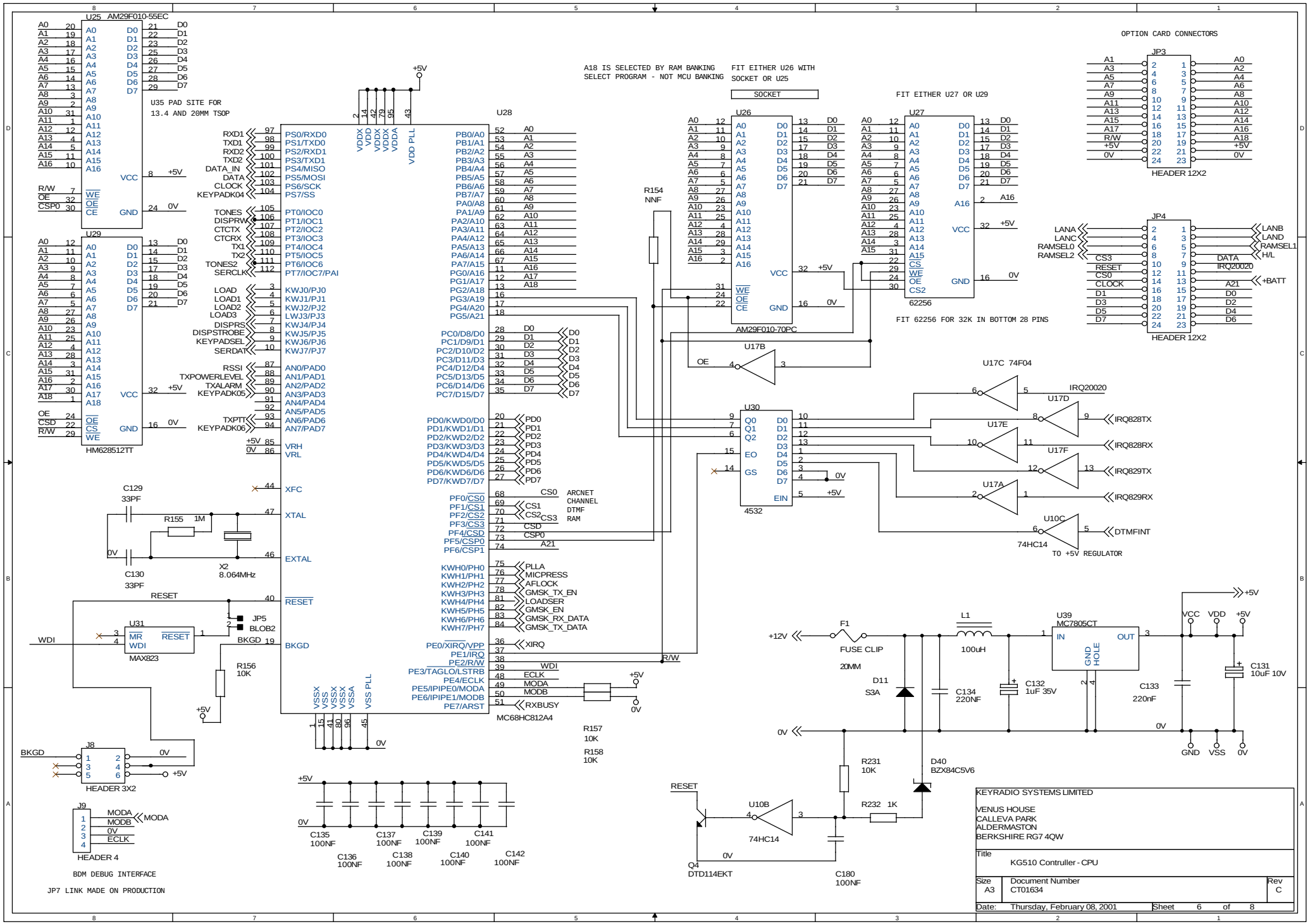
U25 AM29F010-55EC
U35 PAD SITE FOR
13.4 AND 20MM TSOP
U29
HM628512TT
U28
MC68HC812A4
A18 IS SELECTED BY RAM BANKING
SELECT PROGRAM - NOT MCU BANKING
FIT EITHER U26 WITH
SOCKET OR U25
SOCKET
U26
AM29F010-70PC
FIT EITHER U27 OR U29
U27
62256
FIT 62256 FOR 32K IN BOTTOM 28 PINS
OPTION CARD CONNECTORS
JP3
HEADER 12X2
JP4
HEADER 12X2
R154
NNF
U17B
U17C 74F04
U17D
U17E
U17F
U17A
U10C
74HC14
TO +5V REGULATOR
U30
4532
ARCNET
CHANNEL
DTMF
RAM
C129
33PF
R155 1M
C130
33PF
X2
8.064MHz
U31
MAX823
JP5
BLOB2
R156
10K
R157
10K
R158
10K
J8
HEADER 3X2
J9
HEADER 4
BDM DEBUG INTERFACE
JP7 LINK MADE ON PRODUCTION
C135 100NF
C136 100NF
C137 100NF
C138 100NF
C139 100NF
C140 100NF
C141 100NF
C142 100NF
F1
FUSE CLIP
20MM
D11
S3A
L1
100uH
C134
220NF
C132
1uF 35V
U39
MC7805CT
C133
220nF
C131
10uF 10V
R231
10K
R232 1K
D40
BZX84C5V6
U10B
74HC14
Q4
DTD114EKT
C180
100NF
KEYRADIO SYSTEMS LIMITED
VENUS HOUSE
CALLEVA PARK
ALDERMASTON
BERKSHIRE RG7 4QW
Title
KG510 Contruller - CPU
Size A3
Document Number CT01634
Rev C
Date: Thursday, February 08, 2001
Sheet 6 of 8

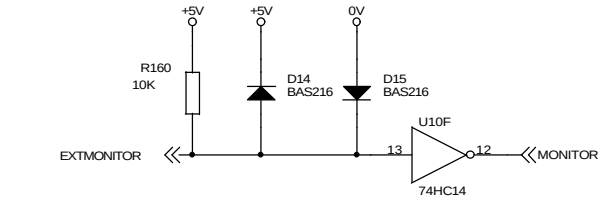

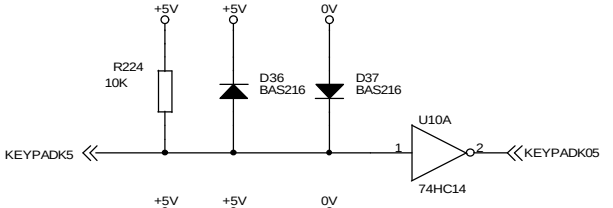

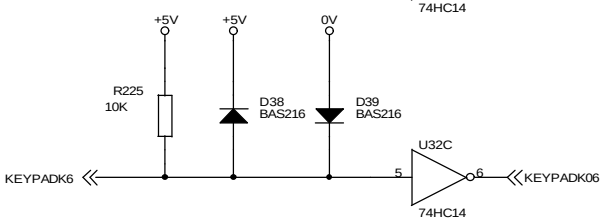

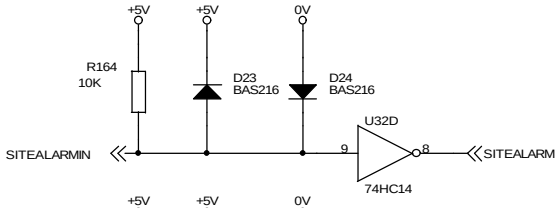

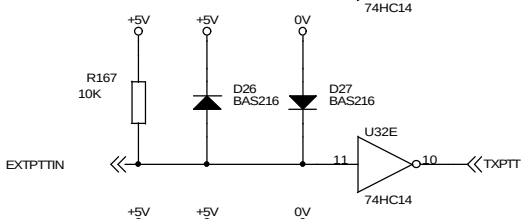

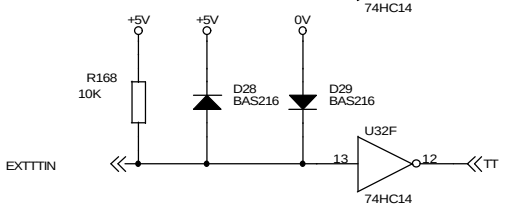

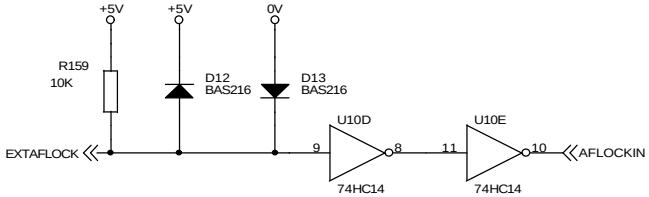

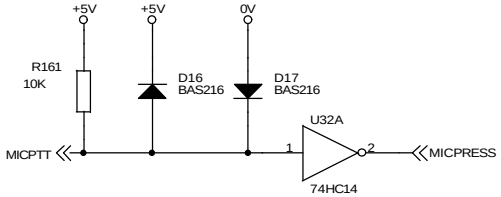

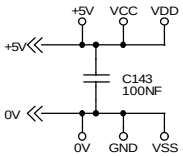

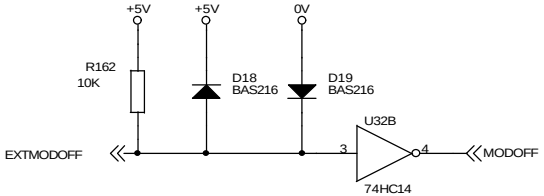

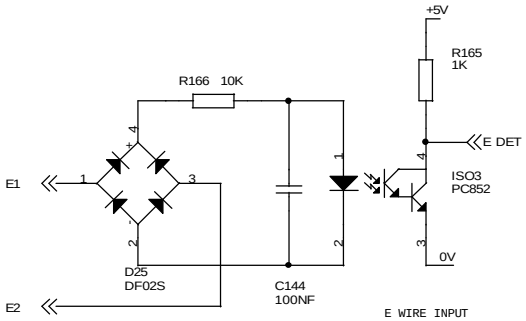

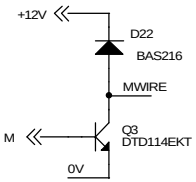

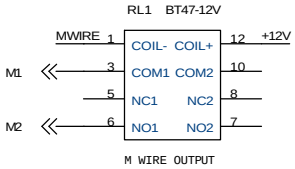

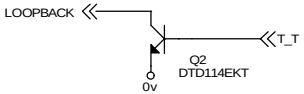

KEY RADIO SYSTEMS LIMITED

VENUS HOUSE
CALLEVA PARK
ALDERMASTON
BERKSHIRE RG7 4QW

Title
KG510 Controller - Digital I/O

Size	Document Number	Rev
A3	CT01634	C

Date: Thursday, February 08, 2001 Sheet 7 of 8

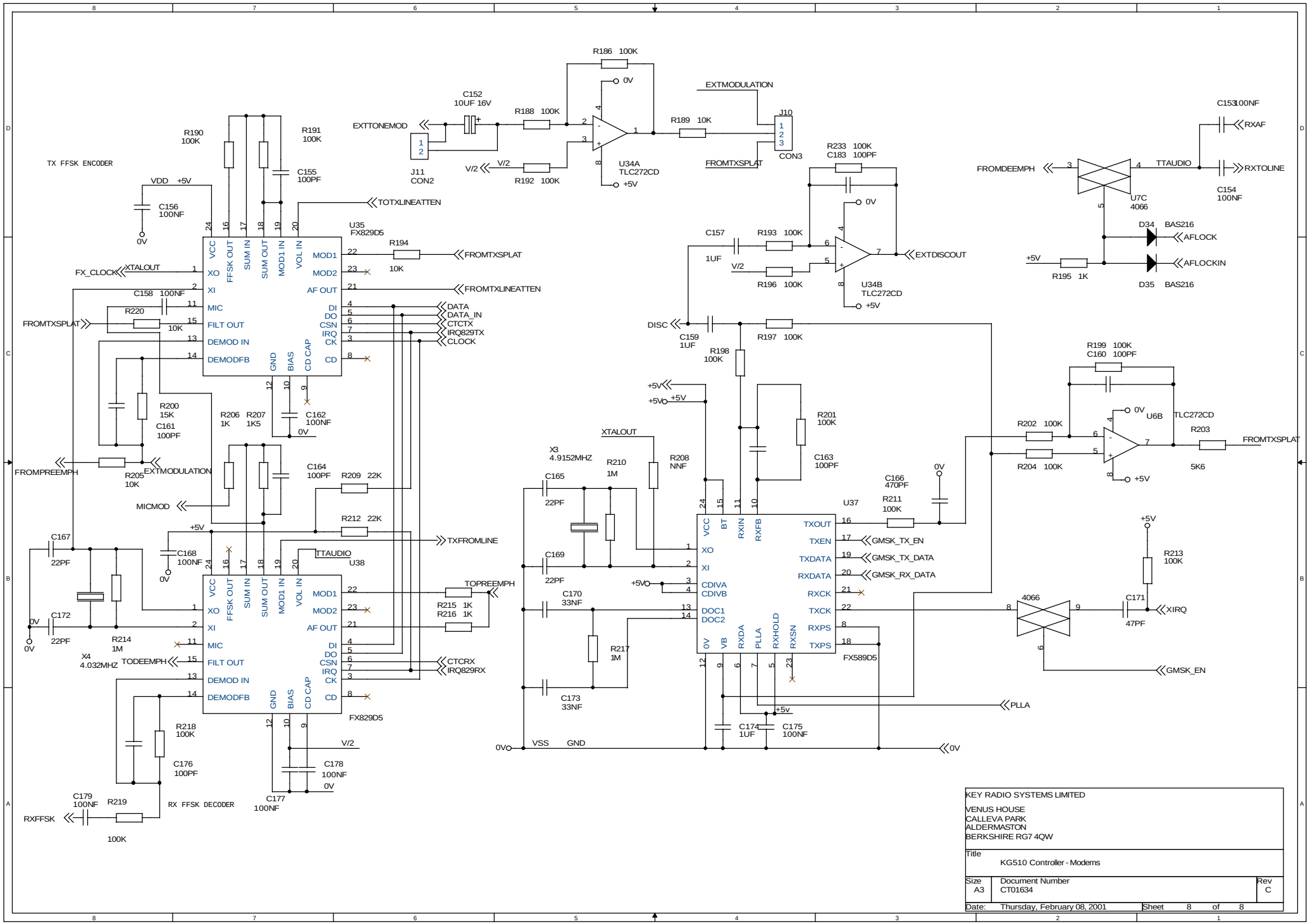

KEY RADIO SYSTEMS LIMITED

VENUS HOUSE
CALLEVA PARK
ALDERMASTON
BERKSHIRE RG7 4QW

Title: KG510 Controller - Modems

Size	Document Number	Rev
A3	CT01634	C

Date: Thursday, February 08, 2001 Sheet 8 of 8

KG510 Controller - Analog Processing Revised: Tuesday, June 05, 2001

CT01634 Revision: C

KEY RADIO SYSTEMS LIMITED
VENUS HOUSE
CALLEVA PARK
ALDERMASTON
BERKSHIRE RG7 4QW

Bill Of Materials June 5,2001 10:54:38

Item	Quantity	Reference	Value	Part Number	Description
1	3	R221,R222,R223	0R	1001-0000	SMT RESISTOR 1/16W 5% 0603 0R
2	57	R74,R76,R78,R80,R81,R83, R84,R85,R86,R87,R88,R89, R90,R99,R100,R101,R102, R103,R104,R105,R106,R107, R108,R109,R110,R111,R112, R114,R115,R116,R117,R119, R120,R121,R122,R123,R124, R126,R127,R128,R129,R131, R133,R134,R135,R137,R139, R140,R141,R142,R144,R145, R146,R148,R149,R150,R151	100R	1001-1010	SMT RESISTOR 1/16W 5% 0603 100R
3	22	R39,R40,R47,R48,R49,R50, R51,R52,R53,R70,R71,R72, R73,R75,R77,R79,R165, R195,R206,R215,R216,R232	1K	1001-1020	SMT RESISTOR 1/16W 5% 0603 1K
4	38	R1,R29,R42,R44,R45,R54, R58,R60,R61,R63,R91,R92, R93,R94,R95,R96,R97,R132, R138,R156,R157,R158,R159, R160,R161,R162,R164,R167,	10K	1001-1030	SMT RESISTOR 1/16W 5% 0603 10K

		R168,R189,R194,R205,R220, R224,R225,R231,R234,R236			
5	33	R15,R16,R25,R26,R32,R33, R34,R38,R41,R43,R64,R186, R188,R191,R192,R193,R196, R197,R198,R199,R201,R202, R204,R211,R213,R218,R219, R226,R227,R228,R229,R230, R233	100K	1001-1040	SMT RESISTOR 1/16W 5% 0603 100K
6	4	R155,R210,R214,R217	1M	1001-1050	SMT RESISTOR 1/16W 5% 0603 1M
7	1	R207	1K5	1001-1520	SMT RESISTOR 1/16W 5% 0603 1K5
8	2	R200,R28	15K	1001-1530	SMT RESISTOR 1/16W 5% 0603 15K
9	2	R36,R27	1K8	1001-1820	SMT RESISTOR 1/16W 5% 0603 1K8
10	3	R67,R68,R69	2K2	1001-2220	SMT RESISTOR 1/16W 5% 0603 2K2
11	6	R6,R35,R190,R209,R212, R237	22K	1001-2230	SMT RESISTOR 1/16W 5% 0603 22K
12	1	R4	33K	1001-3330	SMT RESISTOR 1/16W 5% 0603 33K
13	1	R143	390R	1001-3910	SMT RESISTOR 1/16W 5% 0603 390R
14	1	R23	470R	1001-4710	SMT RESISTOR 1/16W 5% 0603 470R
15	2	R66,R56	4K7	1001-4720	SMT RESISTOR 1/16W 5% 0603 4K7
16	6	R2,R30,R31,R37,R55,R57	47K	1001-4730	SMT RESISTOR 1/16W 5% 0603 47K
17	1	R203	5K6	1001-5620	SMT RESISTOR 1/16W 5% 0603 5K6
18	1	R65	56K	1001-5630	SMT RESISTOR 1/16W 5% 0603 56K
19	1	R152	620R	1001-6210	SMT RESISTOR 1/16W 5% 0603 620R
20	1	R59	10R	1002-1000	SMT RESISTOR 1/8W 5% 0805 10R
21	1	R166	10K	1002-1030	SMT RESISTOR 1/8W 5% 0805 10K
22	1	R238	100K	1015-1040	SMT 4mm PRESET 100K 3314G BOURNS
23	14	C2,C7,C15,C16,C17,C20, C21,C155,C160,C161,C163, C164,C176,C183	100PF	1101-1012	SMT CAP C0G 5% 0603 100pF
24	70	C31,C46,C49,C52,C53,C54, C55,C56,C58,C59,C60,C61, C62,C63,C64,C65,C66,C67, C68,C70,C71,C72,C73,C74, C75,C76,C78,C79,C80,C81,	1nF	1101-1021	SMT CAP X7R 10% 0603 1nF

		C83,C84,C85,C86,C87,C88, C89,C90,C91,C92,C93,C94, C95,C96,C97,C98,C99,C101, C102,C103,C105,C106,C108, C109,C110,C111,C114,C115, C116,C117,C118,C119,C120, C121,C122,C124,C125,C126, C127,C128			
25	1	C35	10NF	1101-1031	SMT CAP X7R 10% 0603 10nF
26	48	C12,C13,C14,C19,C24,C25, C26,C27,C28,C29,C30,C32, C33,C34,C36,C37,C38,C39, C40,C41,C42,C45,C47,C48, C50,C51,C135,C136,C137, C138,C139,C140,C141,C142, C143,C144,C153,C154,C156, C158,C162,C168,C175,C177, C178,C179,C180,C184	100nF	1101-1040	SMT CAP Y5V 20% 0603 100nF 16V
27	4	C165,C167,C169,C172	22PF	1101-2202	SMT CAP C0G 5% 0603 22pF
28	2	C23,C18	2N2 5%	1101-2222	SMT CAP X7R 5% 0603 2.2nF
29	2	C129,C130	33PF	1101-3302	SMT CAP C0G 5% 0603 33pF
30	2	C173,C170	33NF	1101-3331	SMT CAP X7R 10% 0603 33nF
31	1	C171	47PF	1101-4702	SMT CAP C0G 5% 0603 47pF
32	1	C166	470PF	1101-4712	SMT CAP C0G 5% 0603 470pF
33	1	C44	47nF	1101-4731	SMT CAP X7R 10% 0603 47nF
34	6	C4,C22,C157,C159,C181, C182	1UF	1102-1050	SMT CAP Y5V 20% 0805 1uF 16V
35	2	C134,C133	220nF	1102-2241	SMT CAP X7R 10% 0805 220nF 16V
36	3	C131,C152,C174	10UF 10V	1120-XXXX	SMT TANT CAP 10uF 10V CASE A
37	1	C132	1uF 35V	1120-1080	SMT TANT CAP 1uF 35V CASE B
38	1	C43	47uF 25V	1150-4700	ELECTRO RAD 47uF 25V
39	1	D11	S3A	1210-0001	RECTIFIER DIODE SMT 3A 100V G.I.
40	31	D1,D2,D3,D4,D5,D6,D7,D8, D9,D10,D12,D13,D14,D15, D16,D17,D18,D19,D22,D23,	BAS216	1210-0006	SOD110 DIODE SWITCHING BAS216

		D24,D26,D27,D28,D29,D34, D35,D36,D37,D38,D39			
41	1	D40	BZX84C5V6	1212-0003	SOT23 ZENER DIODE 5.6V BZX84C5V6
42	1	U19	LM386	1230-0004	SO8 AF POWER AMP LM386M1
43	4	U4,U6,U20,U34	TLC272CD	1230-0011	SO8 DUAL CMOS OP-AMP TLC272CD
44	1	U28	MC68HC812A4	1231-0002	QFP MC68HC812A4CPV8
45	1	U12	MAX232CWE	1232-0001	SO16W RS232 TRX MAX232CWE
46	2	U10,U32	74HC14	1233-0004	SO14 74HC14 T OR D SUFFIX
47	4	U9,U11,U13,U14	74HC595	1233-0011	SO16 74HC595 T OR D SUFFIX
48	1	U16	74HCT573	1233-0013	SO20 74HCT573 T OR D SUFFIX
49	1	U30	4532	1233-0017	SO16 PRIORITY ENC HCF4532BM1 OR T
50	2	U23,U7	4066	1233-0025	SO14 QUAD SWITCH 4066BM1 OR T
51	1	U17	74F04	1233-0037	SO14 74F04 T OR D SUFFIX
52	1	U27	62256	1234-0006	SO28/330 32X X 8 SRAM 80nS HM62256AFP-8T
53	1	U29	HM628512TT	1234-0007	SO32 KM684000BLG-7L 512KX8 RAM
54	1	U22	SO78L05	1235-0001	SO8 +5V 100mA REG LM78L05ACM
55	1	U18	DS1267S-010	1237-0008	DUAL DIGITAL POT DS1267S-10 10K
56	2	U2,U5	FX828D5	1237-0018	FX828D5
57	2	U35,U38	FX829D5	1237-0019	FX829D5
58	1	U37	FX589D5	1237-0020	FX589D5
59	1	U31	MAX823	1239-0001	MAX823 WATCHDOG/RESET SOT23
60	2	ISO2,ISO1	TIL199	1271-0002	DIL16 OPTO ISOLATOR QUAD TIL199
61	1	U26	AM29F010-70PC	1284-0009	DIL 32 AM29F010-70PC 128KX8 FLASH
62	1	U25	AM29F010-55EC	1284-0011	TSOP 32 AM29F010-55PC 128KX8 FLASH
63	1	U39	MC7805CT	1285-0004	TO220 5V 1A REG MC7805CT +FIXING
64	1	L1	100uH	1321-0001	EC36101K AXIAL CHOKE 100uH
65	1	X2	8.064MHz	1350-0001	HC49/4 8.064MHz CRYSTAL 4MM HIGH
66	1	X3	4.9152MHZ	1350-0006	HC49/4 4.9152MHz CRYSTAL 4MM HIGH
67	1	X1	3.579545MHZ	1350-0002	HC49/4 3.579545MHz CRYSTAL 4MM HIGH
68	1	X4	4.032MHZ	1350-0007	HC49/4 4.032 MHZ CRYSTAL 4MM HIGH
69	1	RL1	BT47-12V	1410-0003	RELAY DPDT BT47 12V
70	1	F1	1A 20MM	1420-0005	1A A/S 20mm FUSE
71	2	FC1,FC2	FUSE CLIP	1420-0004	20mm PCB FUSE CLIP RS197-9480 OR EQUIV
72	3	J4,J6,J11	CON2	1516-0001	BERG STICK 2 WAY 0.1" BERG 68001-102H
73	2	CN6,J10	CON3	1516-0002	BERG STICK 3 WAY 0.1" BERG 68001-103H

74	1	J8	HEADER 3X2	1516-0017	3X2 WAY HEADER 0.1" PITCH
75	2	JP4,JP3	HEADER 12X2	1516-0018	12 X 2 PCB PLUG 0.1"
76	4	JP6,JP7,JP8,J9	HEADER 4	1516-0019	4 PIN PCB PLUG 0.1"
77	1	CN1	HEADER 20	1524-0037	006200207032800 FILM PCB CON 20 WAY
78	6	J1,J2,CN2,J3,CN3,CN7	HEADER 16	1524-0038	006200167032800 FILM PCB CON 16 WAY
79	1	SKT1	IC SKT	1546-0010	32 PIN X 0.6" IC SOCKET
80	1	D25	DF02S	1216-0001	DF02S SMT BRIDGE RECTIFIER RS 269-300
81	4	Q1,Q2,Q3,Q4	DTD114EKT	1200-0005	DTD114EKT NPN DIGITAL TRANSISTOR 500MA
82	1	U15	74HC165	1233-0043	SO16 74HC165
83	1	JP1	HEADER 10X2	1516-0026	10 X 2 PCB PLUG 0.1"
84	1	JP2	HEADER 4X2	1516-0027	4 X 2 PCB PLUG 0.1"
85	1	T1	P3000	1451-0004	P3000 HYBRID TRANSFORMER
86	1	U8	MT8880CS	1237-0023	MT8880CS DTMF TRANCEIVER 20 PIN SOIC
87	1	ISO3	PC852	1271-0004	PC852 SINGLE DARLINGTON OPTOISOLATOR 0.3"
88	2	C123,C113	3.3UF 100VDC	1181-3351	3.3UF 100VDC RS 298-0267
89	2	U24,U21	BU4S01	1233-0044	SOT23-5 2 INPUT NOR BU4S01
90	1	JP5	BLOB2	PART OF PCB DESIGN	
91	1	TP1	SOLDER PAD	PART OF PCB DESIGN	
92	3	R153,R154,R208	NNF	NOT FITTED	THIS MEANS PART NOT FITTED !!

KEY RADIO SYSTEMS LTD
CT01634
PA00---
ISS C
KG510 CONTROLLER
TRACK TOP SIDE
21/02/01

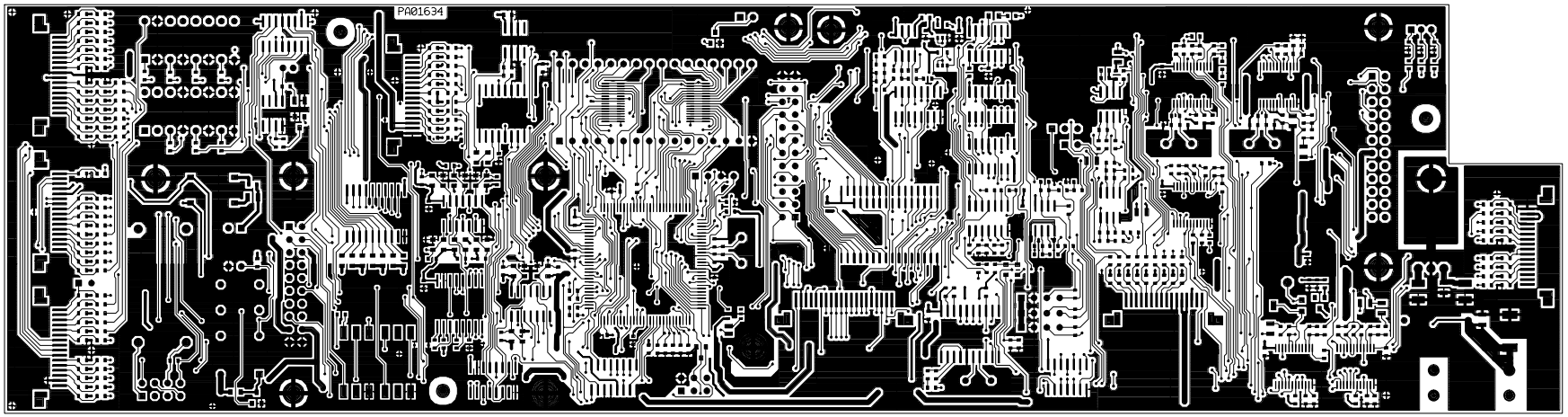

KEY RADIO SYSTEMS LTD
CT01634
PA00---
ISS C
KG510 CONTROLLER
SILK SCREEN
21/02/01

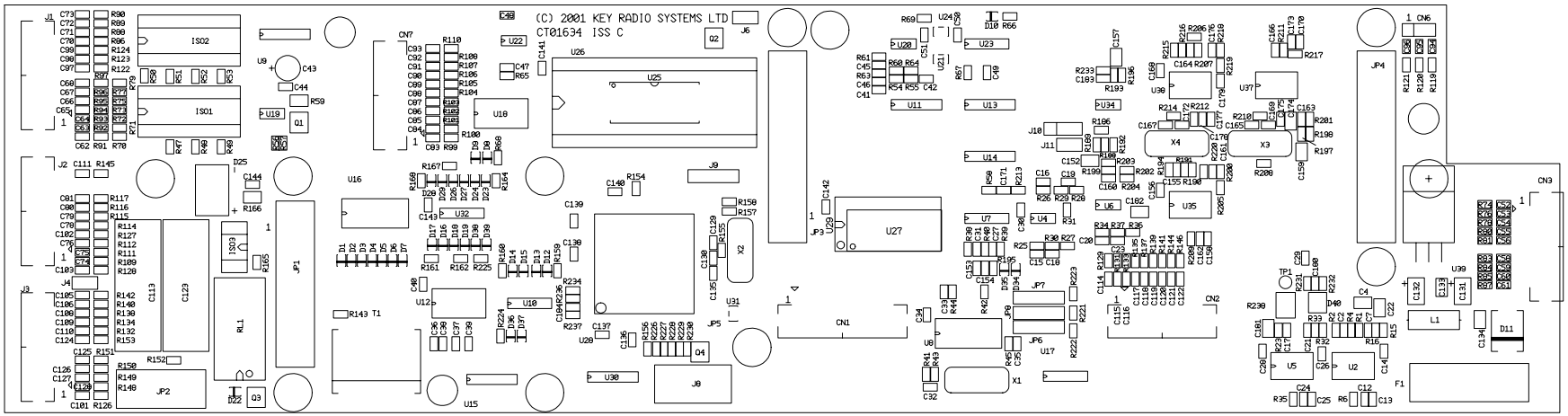

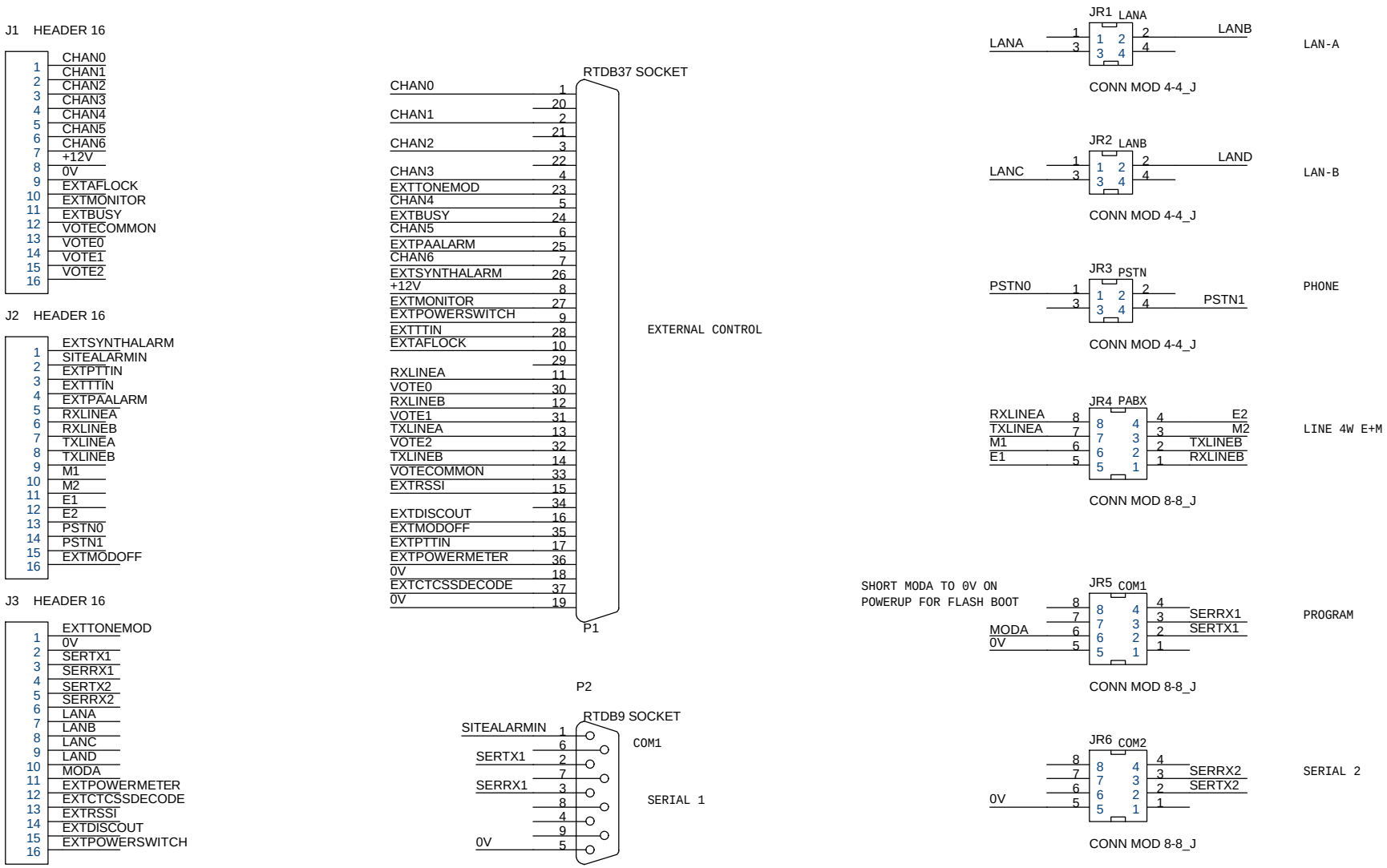

KEY RADIO SYSTEMS LIMITED

VENUS HOUSE
CALLEVA PARK
ALDERMASTON
BERKSHIRE RG7 4QW

Title
KG510 Rear Panel PCB

Size	Document Number	Rev
A4	CT01635	B

Date: Tuesday, October 03, 2000 Sheet 1 of 1

KG510 Rear Panel PCB Revised: Tuesday, October 03, 2000
CT01635 Revision: B

Item	Quantity	Reference	Part	Part Number	Description
1	1	P2	RTDB9 SOCKET	1501-0011	9 WAY D SOCKET RT ANG PCB
2	1	P1	RTDB37 SOCKET	1501-0034	37 WAY D SOCKET RT ANG PCB
3	3	J1,J2,J3	HEADER 16	1524-0038	006200167032800 FILM PCB CON 16 WAY
4	3	JR1,JR2,JR3	CONN MOD 4-4_J	1560-0024	MODULAR 4/4 PIN SOCKET RIGHT ANGLE PCB RS 477-337
5	3	JR4,JR5,JR6	CONN MOD 8-8_J	1560-0028	MODULAR 6/8 PIN SOCKET RIGHT ANGLE PCB RS 477-393

KEY RADIO SYSTEMS LTD
KG510 REAR PANEL PCB
SILK SCREEN
DRG No PA001635-02-B
CT001635 ISS b
02/10/00

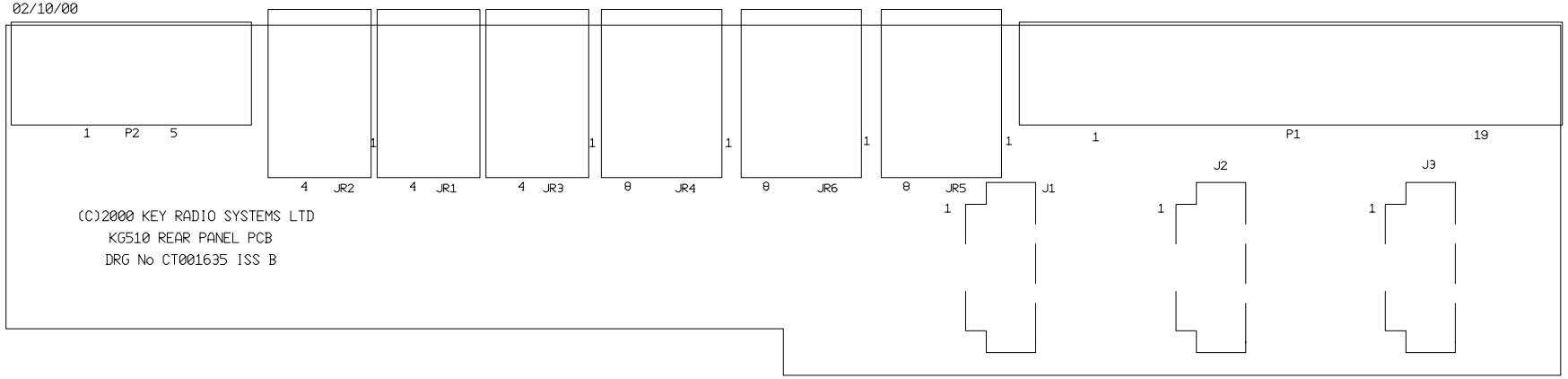

(C)2000 KEY RADIO SYSTEMS LTD
KG510 REAR PANEL PCB
DRG No CT001635 ISS B

KEY RADIO SYSTEMS LTD
KG510 REAR PANEL PCB
COMPONENT SIDE
DRG No PA001635-01-B
CT001635 ISS B
02/10/00

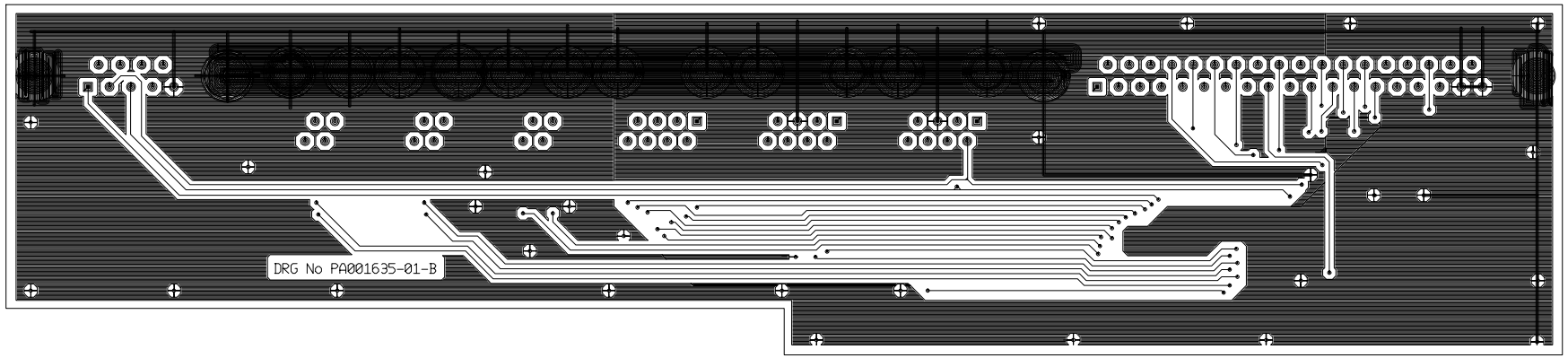

KEY RADIO SYSTEMS LTD
KGS10 REAR PANEL PCB
TRACK SIDE
DRG No PA0016J5-05-B
CT0016J5 1S5 B
02/10/00

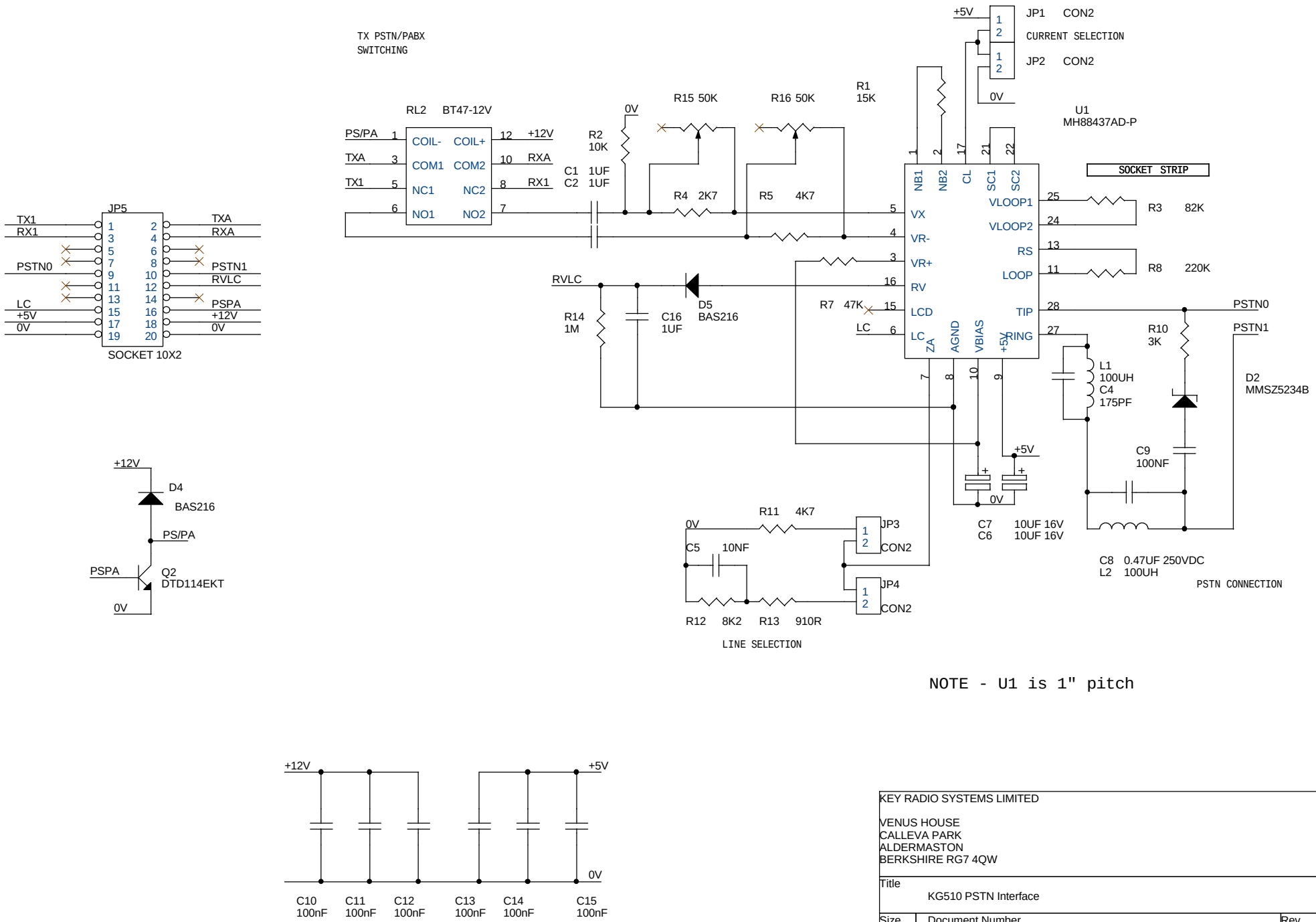

KEY RADIO SYSTEMS LIMITED

VENUS HOUSE
CALLEVA PARK
ALDERMASTON
BERKSHIRE RG7 4QW

Title
KG510 PSTN Interface

Size	Document Number	Rev
A4	CT01637	B

Date: Monday, February 04, 2002 Sheet 1 of 1

KG510 PSTN Interface Revised: Monday, January 28, 2002
CT01637 Revision: B

KEY RADIO SYSTEMS LIMITED
VENUS HOUSE
CALLEVA PARK
ALDERMASTON
BERKSHIRE RG7 4QW

Bill Of Materials January 28,2002 15:52:01 Page1

Item	Quantity	Reference	Part	Part Number	Description
1	1	R4	10K	1001-1030	SMT RESISTOR 1/16W 5% 0603 10K
2	1	R14	1M	1001-1050	SMT RESISTOR 1/16W 5% 0603 1M
3	1	R1	15K	1001-1530	SMT RESISTOR 1/16W 5% 0603 15K
4	1	R2	2K2	1001-2220	SMT RESISTOR 1/16W 5% 0603 2K2
5	1	R8	220K	1001-2240	SMT RESISTOR 1/16W 5% 0603 220K
6	1	R10	3K	1001-3020	SMT RESISTOR 1/16W 5% 0603 3K
7	2	R5,R11	4K7	1001-4720	SMT RESISTOR 1/16W 5% 0603 4K7
8	1	R7	47K	1001-4730	SMT RESISTOR 1/16W 5% 0603 47K
9	1	R12	8K2	1001-8220	SMT RESISTOR 1/16W 5% 0603 8K2
10	1	R3	82K	1001-8230	SMT RESISTOR 1/16W 5% 0603 82K
11	1	R13	910R	1001-9110	SMT RESISTOR 1/16W 5% 0603 910R
12	2	R15,R16	50K	1015-5030	SMT 4mm PRESET 50K 3314G BOURNS
13	1	C4	175PF	1101-1712	SMT CAP C0G 5% 0603 175pF
14	1	C5	10NF	1101-1031	SMT CAP X7R 10% 0603 10nF
15	7	C9,C10,C11,C12, C13,C14,C15	100nF	1101-1040	SMT CAP Y5V 20% 0603 100nF 16V
16	3	C1,C2,C16	1UF	1102-1050	SMT CAP Y5V 20% 0805 1uF 16V
17	2	C7,C6	10UF 16V	1120-1001	SMT TANT CAP 10uF 16V CASE C
18	2	D5,D4	BAS216	1210-0006	SOD110 DIODE SWITCHING BAS216
19	2	L2,L1	100UH	1321-0001	EC36101K AXIAL CHOKE 100uH
20	1	RL2	BT47-12V	1410-0003	RELAY DPDT BT47 12V
21	4	JP1,JP2,JP3,JP4	CON2	1516-0001	BERG STICK 2 WAY 0.1" BERG 68001-102H
22	1	D2	MMSZ5234B	1212-0020	SOD123 ZENER DIODE 6.2V MMSZ5234B
23	1	Q2	DTD114EKT	1200-0005	DTD114EKT NPN DIGITAL TRANSISTOR 500MA
24	1	JP5	SOCKET 10X2	1516-0020	10 X 2 PCB SOCKET 0.1"
25	1	U1	MH88437AD-P	1237-0024	MT88437AD-P 28 PIN DIL HYBRID
26	1	C8	0.47UF 250VDC	1185-4712	0.47UF 250VDC RS 298-0302
27	2	SKT1,SKT2	IC SKT	1546-0012	IC SOCKET STRIP 0.1" 14 PIN

KEY RADIO SYSTEMS LTD
CT01637
PA01637-02-B
ISS B
KG510 PSTN I/F
SILK SCREEN
31/01/02

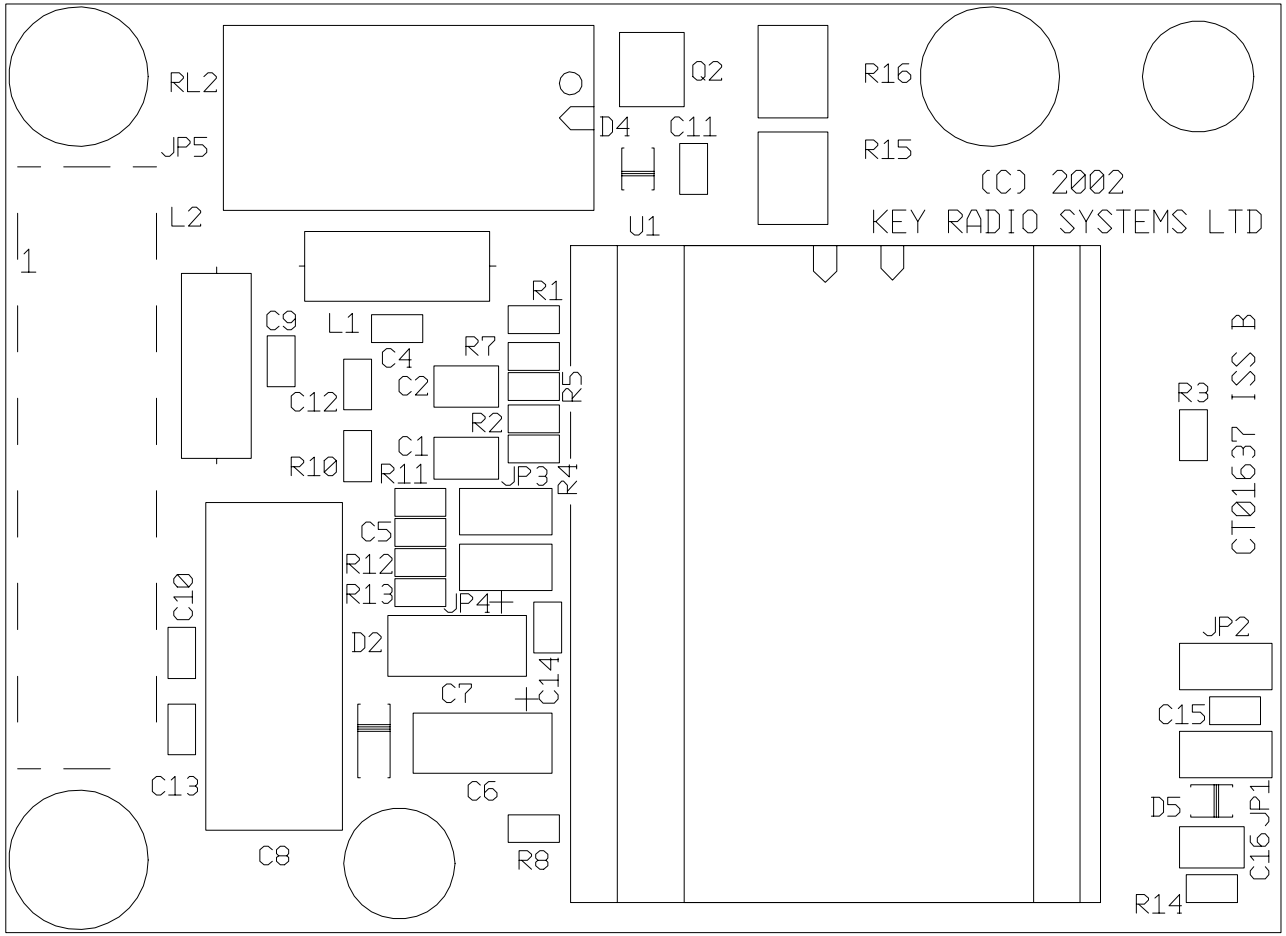

KEY RADIO SYSTEMS LTD
CT01637
PA01637-01-B
ISS B
KG510 PSTN I/F
TRACK TOP SIDE
31/01/02

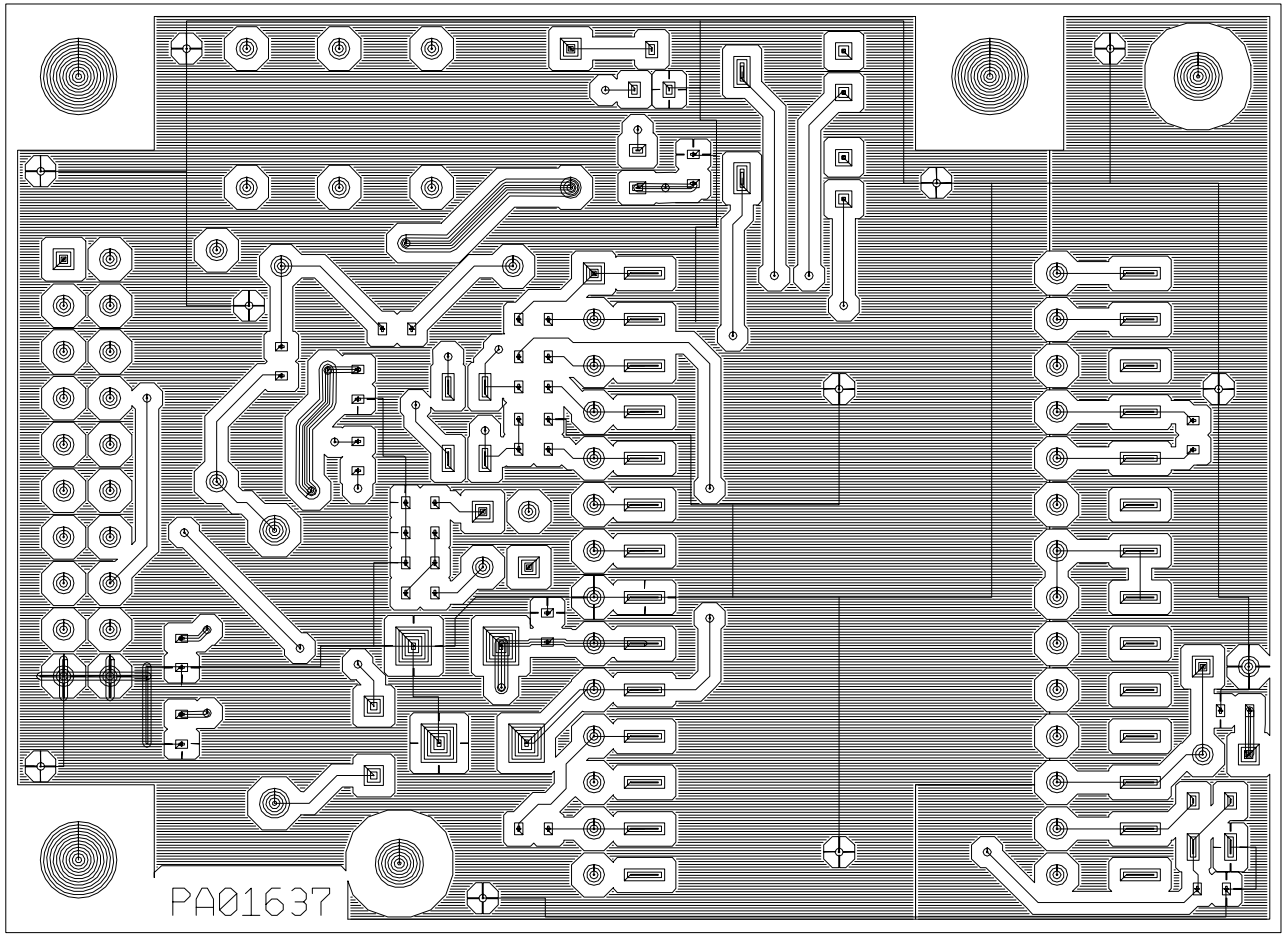

KEY RADIO SYSTEMS LTD
CT016637
PA016637-05-B
155 B
KG510 PSTN I/F
TRACK BOTTOM SIDE
31/01/02

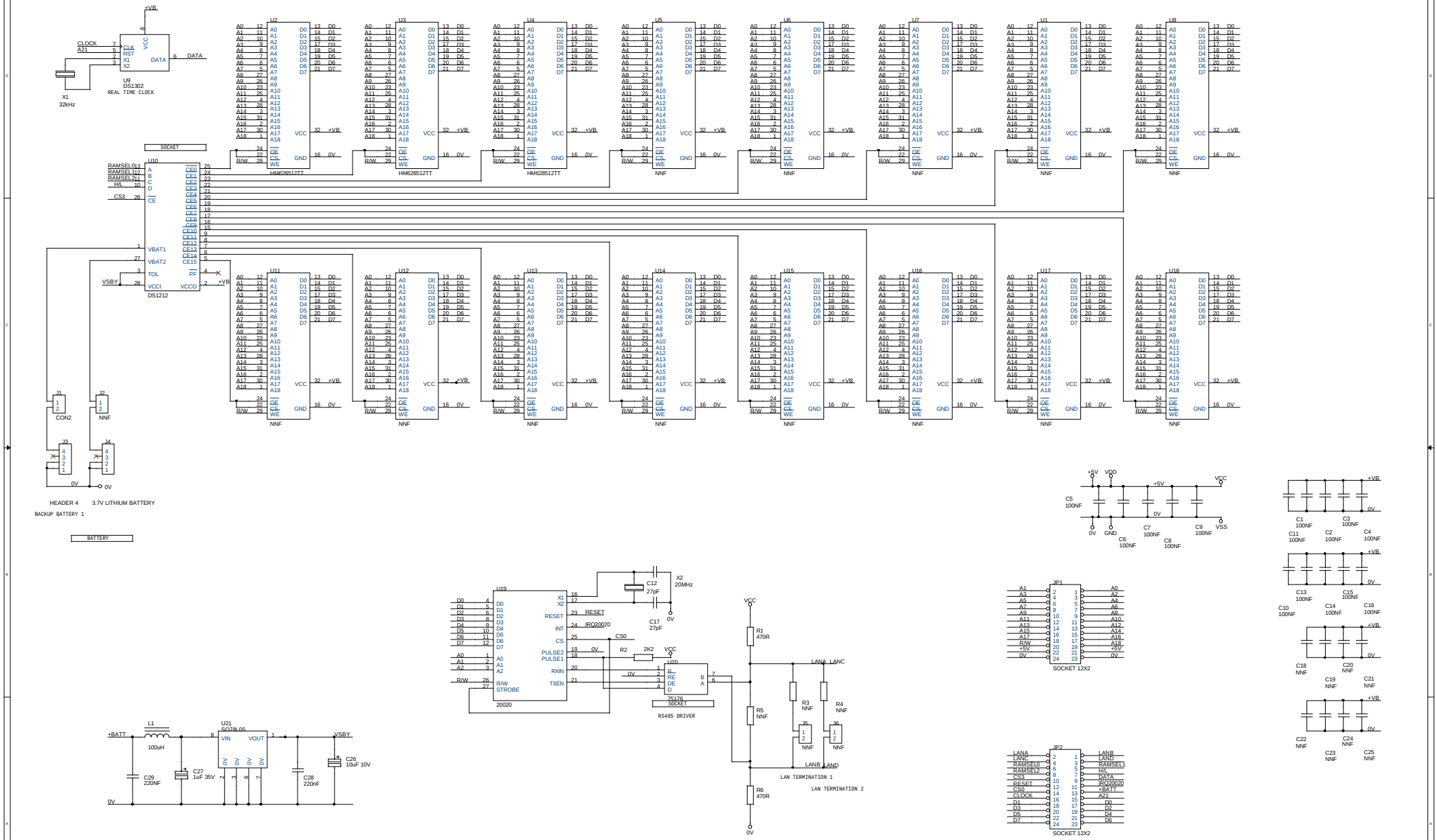

KEY RADIO SYSTEMS LIMITED

VENUS HOUSE
CALLEVA PARK
ALDERMASTON
BERKSHIRE RG7 4QW

Title	KG510 Option Card	
Size A2	Document Number CT01636	Rev A
Date: Monday, January 28, 2002	Sheet 1 of 1	

KG510 Option Card Revised: Friday, November 10, 2000
CT01636 Revision: A

Option - No Ram

Item	Quantity	Reference	Part	Part Number	Description
1	1	R2	2K2	1001-2220	SMT RESISTOR 1/16W 5% 0603 2K2
2	5	R1,R3,R4,R5,R6	470R	1001-4710	SMT RESISTOR 1/16W 5% 0603 470R
3	5	C5,C6,C7,C8,C9	100NF	1101-1040	SMT CAP Y5V 20% 0603 100nF 16V
4	2	C12,C17	27pF	1101-2702	SMT CAP C0G 5% 0603 27pF
5	1	U19	20020	1232-0002	COM20020 ARCNET 28 PIN PLCC
6	1	U20	75176	1282-0005	DIL8 75176 RS485 DRIVER
7	1	X2	20MHz	1350-0010	HC49/4 20 MHZ CRYSTAL
8	2	J6,J5	CON2	1516-0001	BERG STICK 2 WAY 0.1" BERG 68001-102H
9	2	JP1,JP2	SOCKET 12X2	1516-0020	12 X 2 PCB SOCKET 0.1"
10	1	SKT2	IC SKT	1546-0011	8 PIN X 0.6" IC SOCKET

KEY RADIO SYSTEMS LTD
CT01636
PA01636-02-A
ISS A
KG510 OPTION
SILK SCREEN
28/07/00

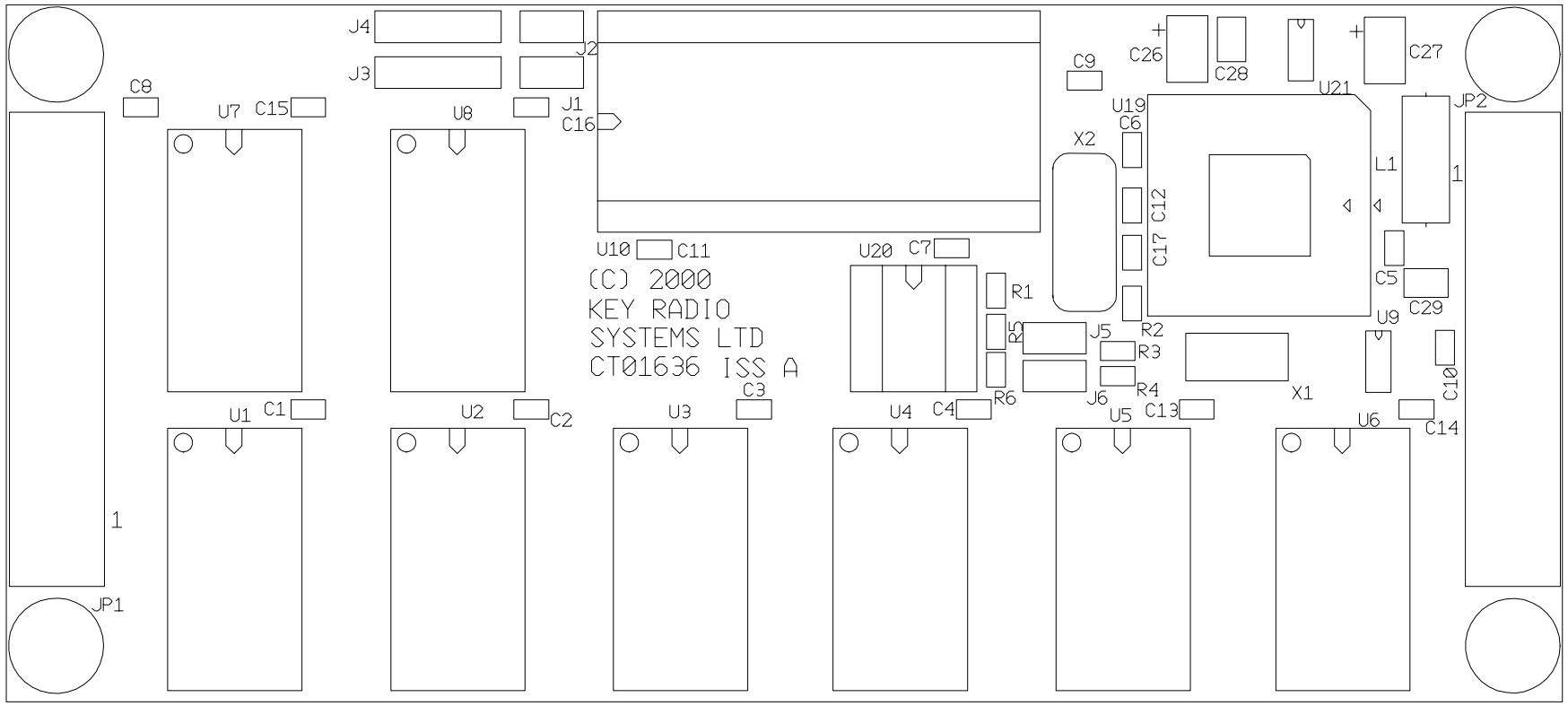

KEY RADIO SYSTEMS LTD
CT01636
PA01636-01-A
ISS A
KG510 OPTION
TRACK TOP SIDE
28/07/00

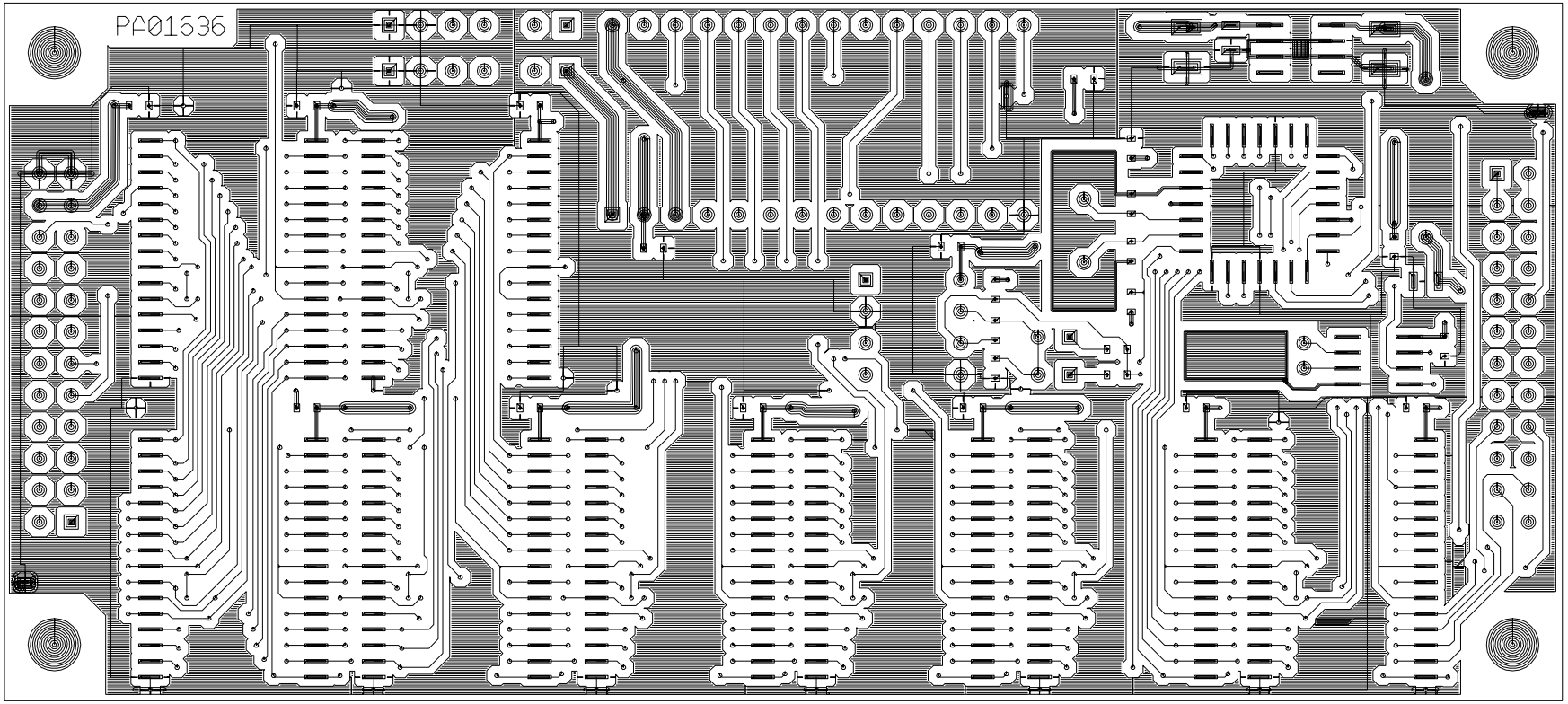

KEY RADIO SYSTEMS LTD
CT01636
PA01636-05-A
ISS A
KGS10 OPTION
TRACK BOTTOM SIDE
28/07/00